SECTION 1

WATER STANDARDS

W-1.1	Water Main Construction Notes
W-1.2	Water Main Construction Notes (Continued)
W-1.3	Water Main Construction Notes (Continued)
W-2.1	Typical Installation of Gate Valve, Valve Stem Extension and Valve Box with Riser
W-2.2	Installation of Butterfly Valve and Tapping Valve
W-3.1	Typical Harness Installation for Flange Fittings
W-3.2	Typical Harness Installation
W-3.3	Concrete Anchor Blocks for Vertical Bends
W-3.4	Concrete Thrust Blocking
W-3.5	Typical Water Main Lowering Detail
W-3.6	Typical Water Main Installation Over Structure
W-3.7	Blowoff with Harness
W-4.1	Typical Fire Hydrant Installation with Hydrant Break-off
W-4.2	Fire Hydrant Guard Post
W-5.1	Water Service Lateral 3/4" and 1?
W-5.2	1" Dual Water Service for Two-3/4" Meters
W-5.3	1-1/2" Water Service Lateral
W-5.4	2" Water Service Lateral for 2" Meter
W-5.5	4" Water Service Lateral Installation for 3" Meter
W-5.6	4" Water Service Lateral Installation for 4" Meter
W-5.7	By-Pass Installation for 2" Meter
W-5.8	By-Pass Installation for 3" Meter
W-5.9	By-Pass Installation for 4" Meter
W-5.10	Typical Fire Sprinkler Service Installation - 4" through 10"
W-6.1	Typical Installation of Air and Vacuum & Air Release Valve
W-6.2	1" Manual Air Relief Valve Assembly
W-7.1	Typical Installation of Reduced Pressure Type Backflow Preventer
W-7.2	Double Detector Check Valve Single Service

1. ALL MATERIAL, WORKMANSHIP, AND CONSTRUCTION DETAILS SHALL CONFORM TO THE CITY OF SEBASTOPOL, "STANDARD SPECIFICATIONS," INCLUDING ALL ADDENDA, STANDARD PLAN REVISIONS AND SPECIAL PROVISIONS.

2. START EXCAVATION BY EXPOSING END OF EXISTING MAIN TO DETERMINE ITS LINE AND GRADE. START NEW MAIN 8 – 10 FEET FROM, AND ON SAME LINE AND GRADE AS EXISTING MAIN. PIPE LAYING SHALL THEN BE ADJUSTED SO THE DEPTH OF NEW MAIN CONFORMS TO NOTE #3.

3. STANDARD DEPTH OF COVER FROM FINISHED GRADE SHALL BE: 48" FOR ALL SIZE MAINS.
   4" AND 10" MAINS MUST BE SPECIFICALLY APPROVED BY THE CITY ENGINEER.
   4" THROUGH 16" MAIN LINE VALVES SHALL BE RESILIENT SEAT GATE.
   18" AND LARGER MAINLINE VALVES SHALL BE BUTTERFLY VALVES.
   BLOW OFF VALVES SHALL BE 2" OR 3" BALL VALVES WITH ROTATION STOPS. THE MINIMUM DEPTH OF COVER FOR ALL WATER MAIN CONSTRUCTION IS 32".

4. NO. 12 INSULATED COPPER WIRE SHALL BE LAID ON TOP OF AND ALONG ENTIRE LENGTH OF ALL MAINS AND SHALL BE EXTENDED TO THE SURFACE AT ALL VALVE LOCATIONS, BLOWOFFS AND METER BOXES SUFFICIENT FOR LOCATOR EQUIPMENT TO BE ATTACHED. FASTEN THE WIRE TO THE TOP OF THE PIPE SO AS NOT TO BE DISPLACED BY BACKFILLING PROCEDURE (ONE METHOD OF ACCOMPLISHING THIS IS TO AFFIX THE WIRE TO THE TOP OF THE PIPE WITH DUCT TAPE AT APPROXIMATELY 10 FEET INTERVALS).

5. MAINS TO BE CONSTRUCTED WITHIN 10' OF SEWER PIPE REQUIRE SPECIAL INSTALLATION AND DESIGN MUST BE SPECIFICALLY APPROVED BY THE CITY ENGINEER.

6. ALL TRENCHING, BACKFILL AND RESURFACING REQUIRED FOR INSTALLATION OF WATER SYSTEM FACILITIES SHALL BE PER CITY STANDARD S–1.1 AND S–1.2.

7. ONLY CITY PERSONNEL SHALL OPERATE VALVES ON EXISTING WATER MAINS OR WATER SERVICES.

8. SERVICE LATERALS OTHER THAN THOSE SHOWN OR NOTED ON THE PLANS SHALL NOT BE INSTALLED PRIOR TO OBTAINING CITY APPROVAL.

9. UNLESS OTHERWISE SHOWN ON THE PLANS, 3/4" WATER SERVICE LATERALS FOR SINGLE METER INSTALLATIONS AND 1" WATER SERVICE LATERALS FOR DOUBLE METER INSTALLATIONS SHALL BE INSTALLED IN RESIDENTIAL DEVELOPMENTS.

10. WATER AND SEWER SERVICE LATERALS SHALL BE SEPARATED HORIZONTALLY BY A MINIMUM OF 5 FEET.

11. AT THE LOCATION OF EACH WATER SERVICE LATERAL, THE LETTER "W" SHALL BE INSCRIBED INTO THE FACE OF THE CURB. THE LETTER "W" SHALL BE 4" HIGH AND COMPLETELY LEGIBLE.

12. ALL COPPER WATER SERVICE TUBING SHALL BE IN CONFORMANCE WITH THE LATEST AWWA STANDARDS AS DESCRIBED IN ANSI/AWWA C800 OR THE LATEST REVISION, AND WITH ASTM B88, AND SHALL BE TYPE "K" SOFT TEMPER TUBING FOR 3/4" AND 1" TUBING AND TYPE "K" HARD TEMPER FOR 1–1/2" AND 2" TUBING.

NOTES CONTINUE ON STD. W–1.2

SEBASTOPOL CALIFORNIA PUBLIC WORKS	WATER MAIN CONSTRUCTION NOTES				STD. NO. W–1.1
	SCALE: NONE	DRAWN: MGA	CHK: SAL	APPVD: PHK	DATE: JULY 1998

13. ALL METER BOXES, VAULTS AND PITS SHALL BE BEDDED ON 3" MINIMUM THICK, 3/4" DRAIN ROCK, AB-2, OR OTHER CLEAN MATERIAL WITH TYPICAL SAND EQUIVALENT OF 20 MINIMUM, UNCONTAMINATED BY NATIVE SOIL, AGAINST COMPACTED OR UNDISTURBED BASE. THE GRAVEL BED SHALL EXTEND TO A 4" MINIMUM BEYOND ALL SIDES OF THE METER BOX. BOX SHALL BE SET FLUSH WITH TOP OF CURB, SIDEWALK OR GROUND, WHICHEVER IS APPLICABLE. LOT NUMBERS MUST BE NOTED ON TOP SIDE OF METER BOX WITH A PERMANENT MARKING PEN.

14. METER BOXES SHALL BE LOCATED OUT OF TRAFFIC LOADING AREAS WHENEVER POSSIBLE. METER BOXES LOCATED IN TRAFFIC LOADING AREAS SHALL BE FITTED WITH TRAFFIC LIDS.

15. METER BOXES AND VAULTS SHALL BE SET SO THAT THE READING LIDS ARE ALIGNED OVER THE METER REGISTERS AS CLOSELY AS POSSIBLE.

16. UNLESS OTHERWISE APPROVED BY THE CITY ENGINEER, THE ON-SITE WATER LINE SHALL BE THE SAME SIZE AS THE WATER METER.

17. FOR SERVICES LARGER THAN 1", IF EITHER THE WATER SERVICE LATERAL OR THE ON-SITE BUILDING LINE IS ALREADY EXISTING WITHIN THE TOLERANCES SPECIFIED ON THE STANDARD PLAN, THE LAST ONE INSTALLED SHALL BE ON THE SAME LINE AND GRADE AS THE EXISTING ONE.

18. ITEMS SPECIFIED ON THE STANDARD PLANS, OR THE ENGINEER'S APPROVED LIST, ARE APPROVED FOR USE BY THE CITY ENGINEER. ALL OTHERS SHALL BE SUBMITTED TO THE CITY ENGINEER FOR APPROVAL.

19. METER MANIFOLDS MUST BE DETAILED AND APPROVED BY THE CITY ENGINEER. IN GENERAL, MANIFOLDS WHERE ALL FITTINGS ARE 2" OR LESS, SHALL BE CONSTRUCTED FROM THREADED BRASS PIPES AND FITTINGS FROM THE END OF THE SERVICE LATERAL TO THE METER CONNECTION. NO PLASTIC PIPE SHALL BE USED IN CONSTRUCTING MANIFOLDS OF ANY SIZE. NO MORE THAN SIX METERS MAY BE MANIFOLDED OFF A SINGLE WATER SERVICE LATERAL, WITH NO MORE THAN 3 ON EITHER SIDE OF THE SERVICE.

20. GASKETS FOR FLANGE FITTINGS SHALL CONFORM TO AWWA STD. C115.

21. TO ABANDON A WATER SERVICE, EXPOSE AND TURN OFF CORPORATION STOP, THEN SEVER THE LATERAL CONNECTION.

22. THERE SHALL BE NO UNMETERED CONNECTIONS TO THE CITY OF SEBASTOPOL WATER SYSTEM, INCLUDING CONNECTIONS BYPASSING METER FOR TESTING ON-SITE PLUMBING OR FOR OBTAINING CONSTRUCTION WATER. PRESSURE TESTING AGAINST VALVES WILL NOT BE ALLOWED. WHEN A SUBDIVISION WATER MAIN HAS BEEN ACCEPTED AND TIED IN, THE INDIVIDUAL CURB STOPS WILL BE LOCKED OFF WITH CABLE TIES. CUTTING OFF OR TAMPERING WITH THE CABLE TIES WILL CONSTITUTE A STRAIGHT TIE-IN CONNECTION. SUCH CONNECTIONS WILL BE SEVERED BY THE CITY AND WILL RESULT IN PENALTIES INCLUDING PAYMENT OF FINES AND ESTIMATED WATER USAGE FEES.

23. UPON APPLICATION, THE CONTRACTOR SHALL INSTALL A 2" TEMPORARY CHECK VALVE ON THE END OF THE EXISTING MAIN FOR CONSTRUCTION WATER (SEE STANDARD), OR AT THE OPTION OF THE CITY ENGINEER, THE CONTRACTOR MAY INSTALL A FIRE HYDRANT METER.

NOTES CONTINUE ON STD. W-1.3

SEBASTOPOL CALIFORNIA PUBLIC WORKS	WATER MAIN CONSTRUCTION NOTES (CONTINUED)				STD. NO. W-1.2
	SCALE: NONE	DRAWN: MGA	CHK: SAL	APPVD: PHK	DATE: JULY 1998

24. BEFORE COMBUSTIBLE MATERIALS MAY BE STORED OR CONSTRUCTED ON SITE, THE FIRE DEPARTMENT MUST APPROVE FIRE FLOW AND ACCESS. BEFORE A FIRE HYDRANT MAY BE PLACED IN SERVICE, A HIGH VELOCITY FLUSHING OF THE HYDRANT LATERAL SHALL BE WITNESSED AND APPROVED BY CITY PERSONNEL. HIGH VELOCITY FLUSHING SHALL CONSIST OF REMOVING THE HYDRANT AND REPLACING IT WITH A SUITABLE ELBOW AND DIFFUSER. UNDER CITY SUPERVISION, THE HYDRANT LATERAL IS FLUSHED UNTIL CITY PERSONNEL ARE SATISFIED THAT THE LINES ARE CLEAR OF DEBRIS.

25. UPON COMPLETION OF CONSTRUCTION, FINAL CONNECTION WILL BE MADE BY THE CONTRACTOR AT THE DEVELOPER'S EXPENSE UNDER INSPECTION BY A CITY REPRESENTATIVE, UNLESS OTHERWISE SPECIFIED ON THE PLANS.

26. WHEN A CONNECTION IS REQUIRED TO AN EXISTING WATER MAIN, THE CONTRACTOR SHALL PROVIDE ALL EXCAVATION, SHORING, BACKFILL AND TRENCH RESURFACING PER CITY STANDARD S-1.1. WHERE THE CONNECTION IS TO BE A "HOT TAP," THE CONTRACTOR SHALL PROVIDE AND INSTALL THE TAPPING VALVE AND SLEEVE, AND ANY OTHER HARDWARE REQUIRED AND WILL MAKE THE TAP. NO HOT TAP SHALL BE MADE WITHIN 4 FEET OF A JOINT (MEASURED FROM JOINT TO CENTERLINE OF INTERSECTING PIPE). THE JOINT SHALL BE REMOVED, AND THE PROPOSED HOT TAP SHALL BE REPLACED WITH A "CUT-IN" TEE. WHEN A "CUT-IN" TEE AND VALVE(S) ASSEMBLY IS REQUIRED ON THE PLANS, THE CONTRACTOR SHALL PROVIDE AND INSTALL THE ENTIRE ASSEMBLY (INCLUDING VALVES), AND ANY OTHER HARDWARE NECESSARY UNDER CITY INSPECTION, AND SHALL PROVIDE ALL OTHER WORK AND MATERIALS NECESSARY TO COMPLETE THE INSTALLATION TO CITY STANDARDS.

27. THE CONTRACTOR SHALL COORDINATE ALL WATER MAIN CONNECTION WORK WITH THE CITY OF SEBASTOPOL PUBLIC WORKS DEPT. AT (707) 823-5331 A MINIMUM OF 72 HOURS PRIOR TO COMMENCING WORK IN ACCORDANCE WITH THE CITY POLICY.

28. AFTER A STREET HAS BEEN OVERLAID, ALL WATER VALVE BOXES WILL BE MARKED IN WHITE PAINT BEFORE THE CLOSE OF THAT WORK DAY.

29. WITHIN 48 HOURS OF PAVING, ALL WATER VALVE BOXES WILL BE BROUGHT TO GRADE AND INSPECTED.

STEM EXTENSION FABRICATION NOTES:

1. ALL WELDS TO RISER SHAFT SHALL BE FILLET WELD ALL AROUND. AS SPECIFIED BELOW.
2. ALL STEEL REQUIRED FOR RISER FABRICATION SHALL BE STRUCTURAL STEEL PER ASTM A36.

VALVE STEM EXTENSION PARTS LIST:

1. VALVE OPERATING NUT OR 1 7/8" X 1 7/8" X 2" HIGH, SOLID STEEL WELDED TO TOP PLATE.
2. 3/16" THK. X 7" DIA. FREE SPINNING GUIDE PLATE WITH 3 5/8" DIA. HOLE IN CENTER.
3. TWO 3/16" X 1 1/2" X 1 1/2" X 5" LONG STEEL ANGLE WELD TO TWO SIDES OF RISER SHAFT.
4. 2 1/2" X 3/16" SQUARE STEEL TUBING, LENGTH AS REQUIRED. EDGE WELD TO TOP PLATE.
5. 3" X 3" X 1/4" STEEL TOP PLATE. WELD TO RISER SHAFT AFTER GUIDE PLATE IS IN PLACE.

NOTES:

1. IF VALVE IS INSTALLED SO THAT THE TOP OF THE OPERATING NUT IS LESS THAN 30" BELOW FINISHED GRADE, THE VALVE STEM RISER IS NOT REQUIRED.
2. VALVES 2" THROUGH 16" SHALL BE RESILIENT WEDGE GATE VALVES AND VALVES 18" AND LARGER SHALL BE BUTTERFLY VALVES (SEE STD W-2.2) UNLESS OTHERWISE APPROVED BY THE CITY.
3. GATE VALVES SHALL CONFORM TO CITY STANDARD SPECIFICATIONS.
4. SEE STD. W-1.1, W-1.2, AND W-1.3 FOR GENERAL CONSTRUCTION NOTES.

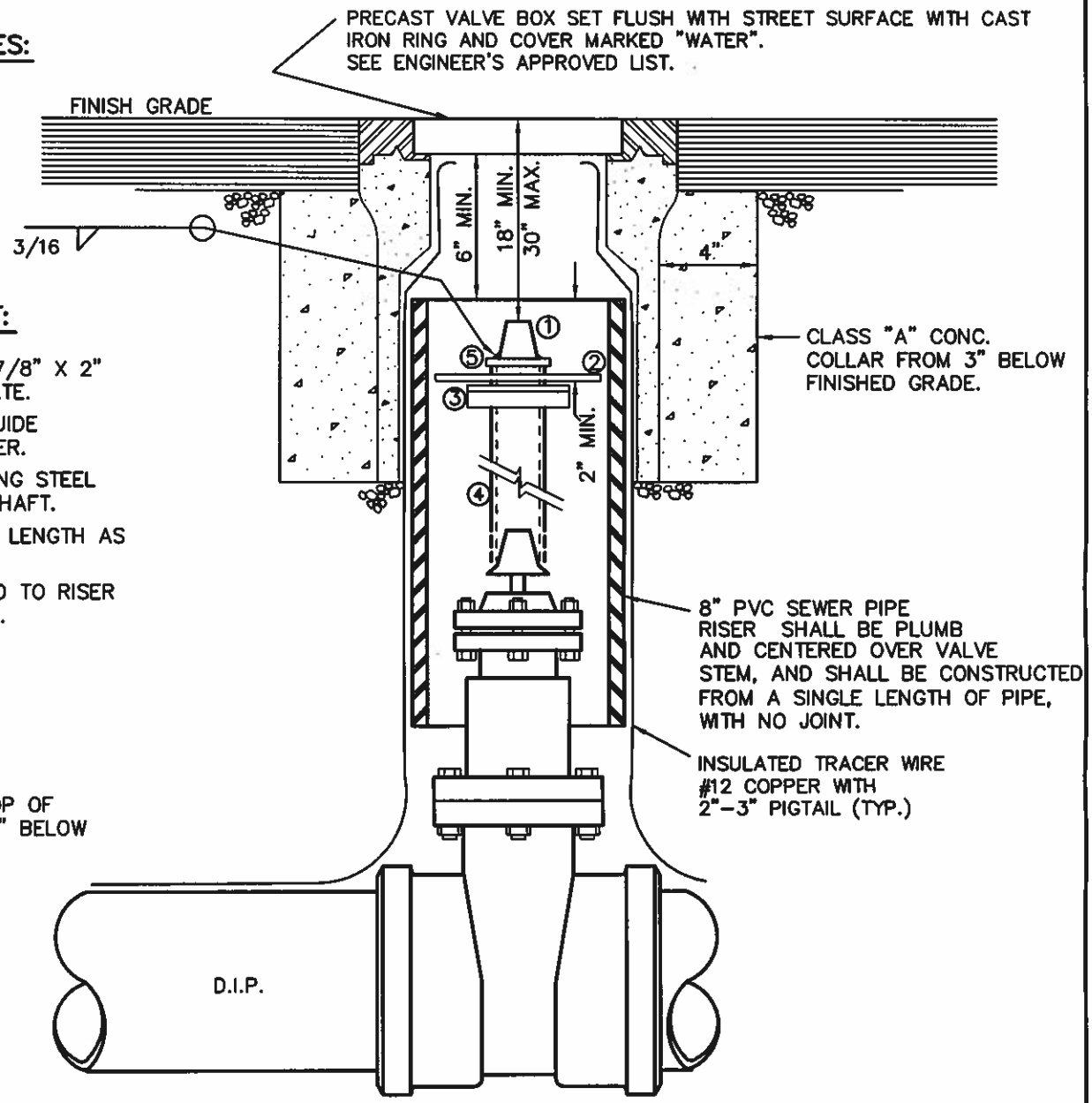

CITY OF SEBASTOPOL · CALIFORNIA · PUBLIC WORKS

TYPICAL INSTALLATION OF GATE VALVE, VALVE STEM EXTENTION, AND VALVE BOX WITH RISER

SCALE: NONE | DRAWN: MGA | CHK: SAL | APPVD: PHK | DATE: JULY 1998

STD. NO. W-2.1

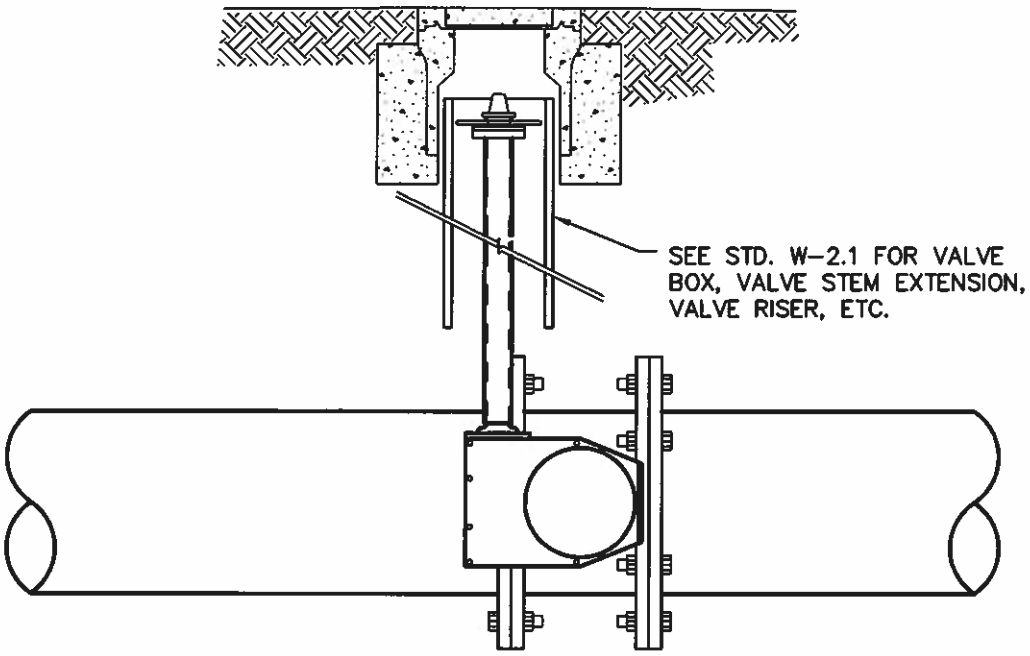

BUTTERFLY VALVE INSTALLATION

TO BE USED ON PIPE 18" AND LARGER

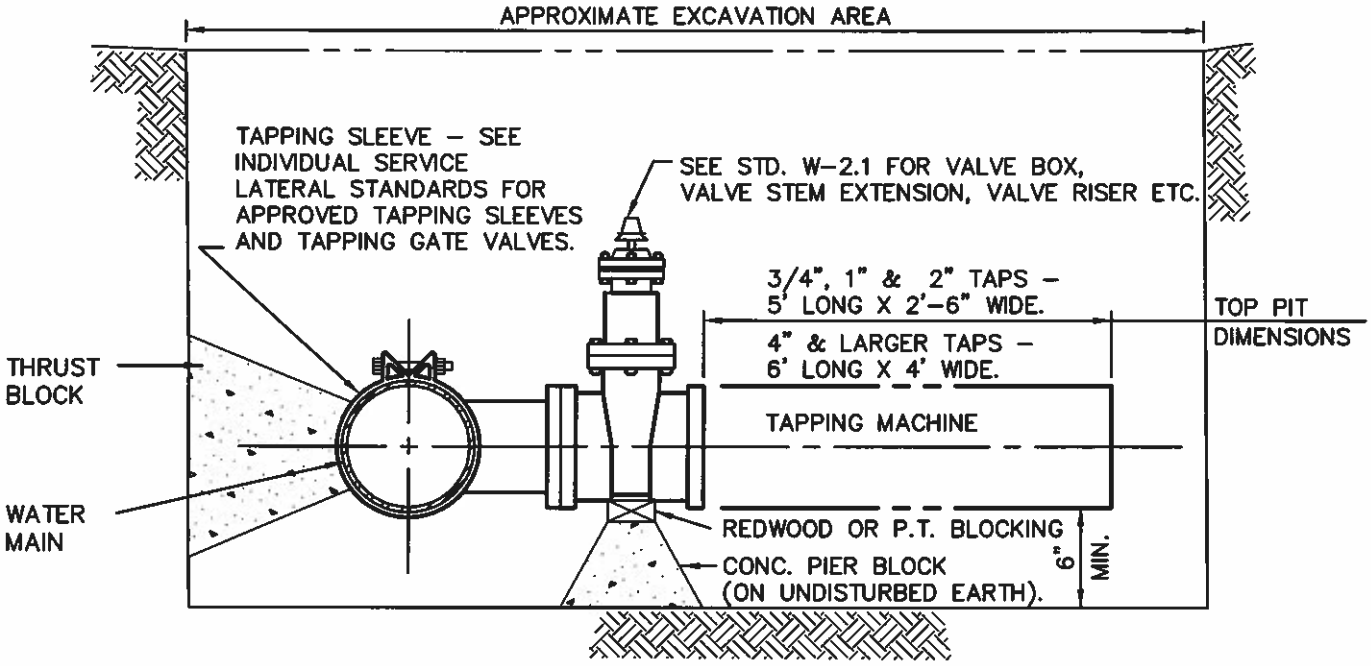

TAPPING SLEEVE & VALVE INSTALLATION

NOTES:

1. ALL EXTERNAL BOLTS AND NUTS ON VALVES SHALL BE 304 STAINLESS STEEL OR VALVE ASSEMBLY SHALL BE POLY-WRAPPED.
2. TAPS SHALL BE MADE BY CONTRACTOR UNDER CITY INSPECTION.
3. ALL BUTTERFLY VALVES SHALL CONFORM TO CITY STANDARD SPECIFICATIONS.

SEBASTOPOL CALIFORNIA PUBLIC WORKS	INSTALLATION OF BUTTERFLY VALVE AND TAPPING VALVE				STD. NO. W-2.2
	SCALE: NONE	DRAWN: MGA	CHK: SAL	APPVD: PHK	DATE: JULY 1998

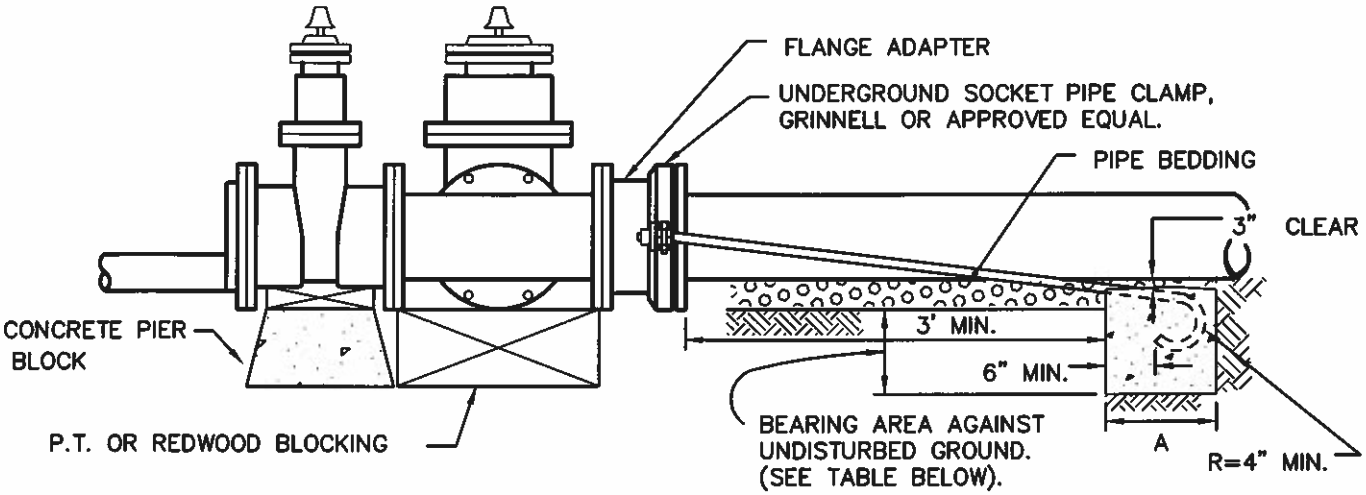

ELEVATION

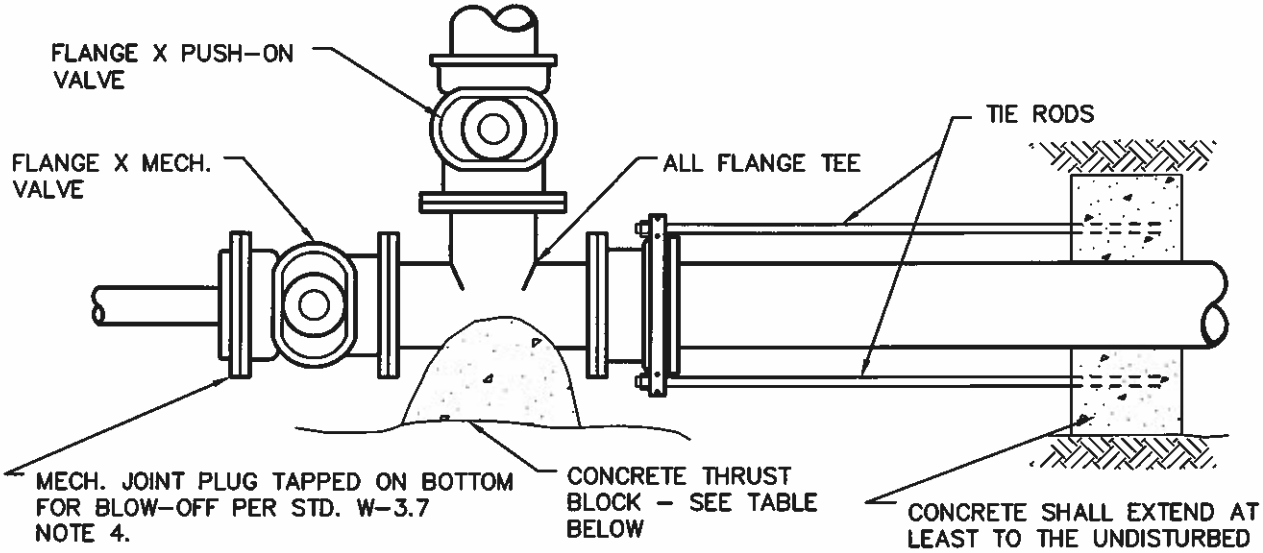

PLAN

MINIMUM DIMENSIONS				
PIPE SIZE	TIE RODS	HARNESS BLOCK *	A	THRUST BLOCK **
6"	5/8"	4 SQ. FT.	2'	4 SQ. FT.
8"	3/4"	7 " "	3'	7 " "
12"	1 1/8"	15 " "	3'	15 " "
OVER 12" BY THE DESIGN ENGINEER				

* BEARING AREA BELOW GRADE OF PIPE AGAINST UNDISTURBED GROUND.
** BEARING AREA AGAINST UNDISTURBED GROUND.

NOTES

1. ALL EXPOSED THREADS SHALL BE PAINTED WITH BITUMASTIC PAINT OR APPROVED SUBSTITUTE, AFTER NUTS ARE TIGHTENED.
2. SEE NOTE STD. W-1 FOR CONSTRUCTION NOTES.

SEBASTOPOL CALIFORNIA PUBLIC WORKS

TYPICAL HARNESS INSTALLATION FOR FLANGE FITTINGS

STD. NO. **W-3.1**

SCALE: NONE | DRAWN: MGA | CHK: SAL | APPVD: PHK | DATE: JULY 1998

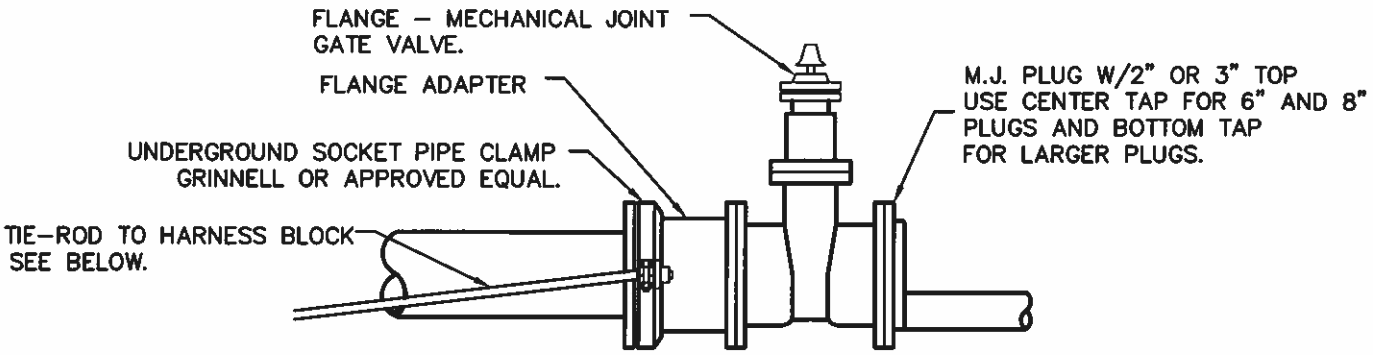

HARNESS FOR VALVE WITH PLUG

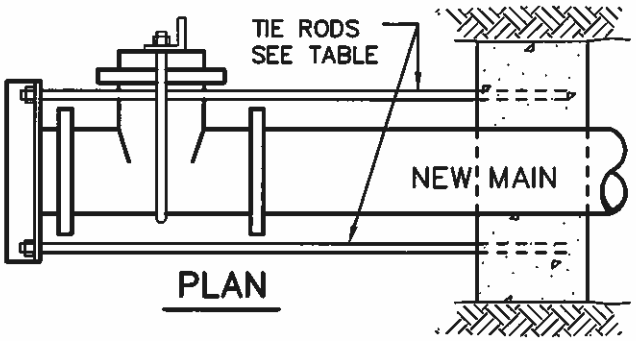

PLAN

CONCRETE SHALL EXTEND AT LEAST TO THE UNDISTURBED EARTH AT BOTH SIDES OF THE TRENCH.

PLUGS FOR MAINS 12" AND LARGER SHALL BE TAPPED OFF CENTER AND HELD WITH ANGLE IRON, AS SHOWN. PLUGS WITH EARS AND CENTER TAP MAY BE USED FOR 6" & 8" MAINS.

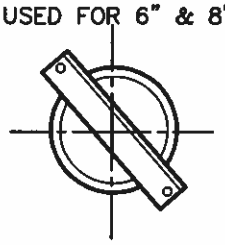

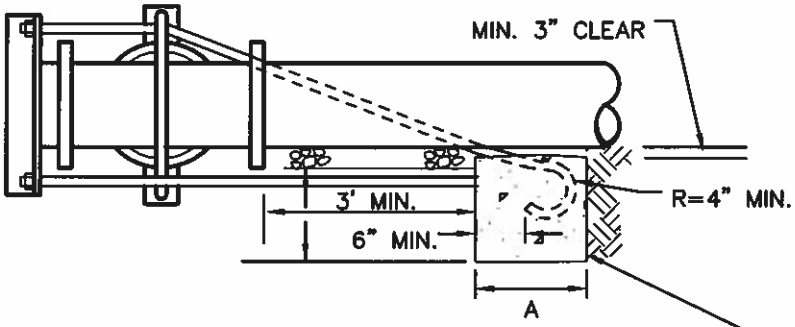

ELEVATION

NOTES

1. ALL EXPOSED THREADS SHALL BE PAINTED WITH BITUMASTIC PAINT OR APPROVED SUBSTITUTE, AFTER NUTS ARE TIGHTENED.
2. SEE STD. W-1 FOR CONSTRUCTION NOTES.

TYPICAL FITTING HARNESS

MINIMUM DIMENSIONS				
PIPE SIZE	TIE RODS	ANGLE IRON	* HARNESS BLOCK	A
6"	5/8"	3"X3"X1/4"	4 SQ. FT.	2'
8"	3/4"	3-1/2"X3"X1/4"	7 " "	3'
12"	1-1/8"	4"X3"X1/2"	15 " "	3'
OVER 12"	BY THE DESIGN ENGINEER			

* BEARING AREA BELOW GRADE OF PIPE AGAINST UNDISTURBED GROUND.

SEBASTOPOL CALIFORNIA PUBLIC WORKS	TYPICAL HARNESS INSTALLATION				STD. NO. W-3.2
	SCALE: NONE	DRAWN: MGA	CHK: SAL	APPVD: PHK	DATE: JULY 1998

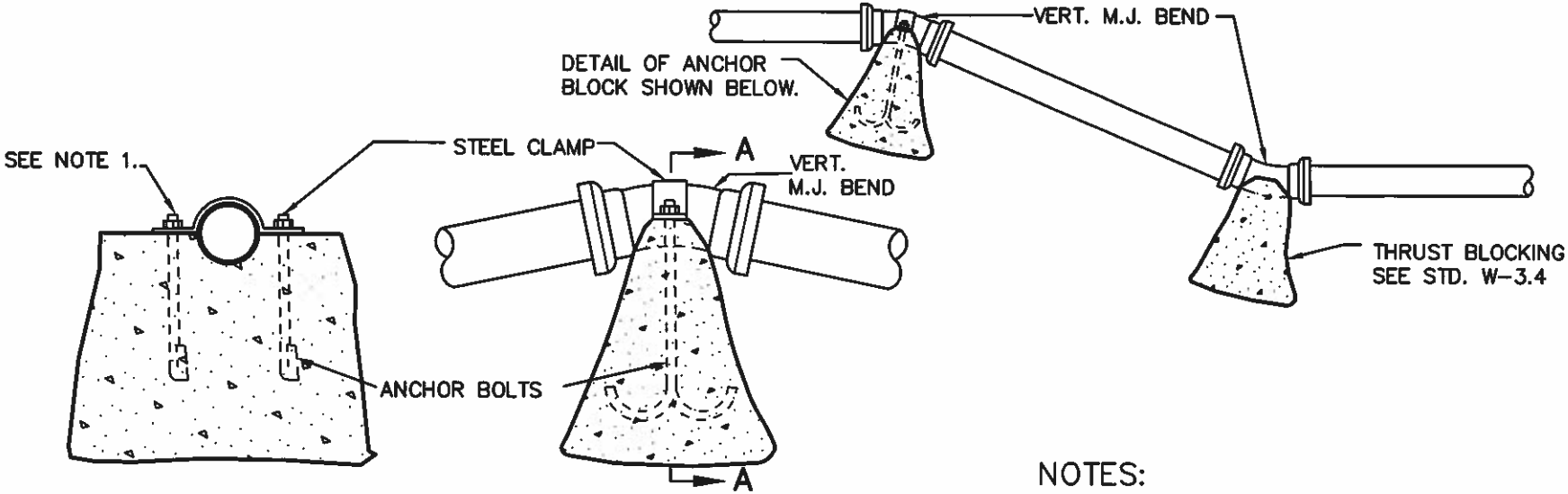

SECTION "A-A"

ELEVATION

TYPICAL CONCRETE ANCHOR BLOCK FOR VERTICAL BEND

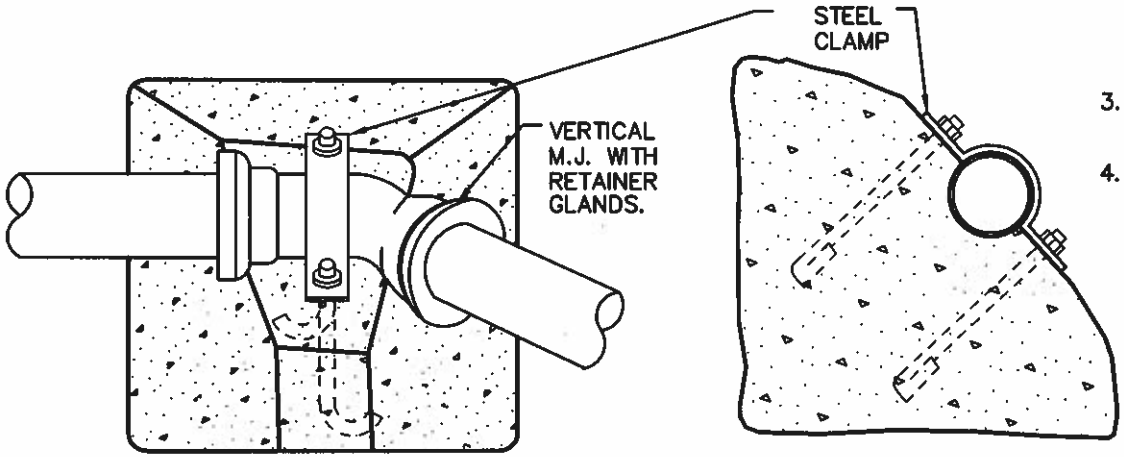

TYPICAL CONCRETE ANCHOR BLOCK FOR COMBINATION HORIZONTAL-VERTICAL BEND

NOTES:

1. ALL EXPOSED THREADS SHALL BE PAINTED WITH BITUMASTIC OR APPROVED EQUAL, AFTER NUTS ARE TIGHTENED.
2. CONCRETE ANCHOR BLOCKS SHALL BE INSTALLED BY THE CONTRACTOR TO WITHSTAND A THRUST PRODUCED BY THE TEST PRESSURE PLUS 50 P.S.I. MINIMUM DIMENSIONS FOR TIE RODS AND CLAMPS ARE LISTED IN THE TABLE BELOW.
3. ALL FITTINGS ARE MECHANICAL JOINT WITH RETAINER GLANDS
4. SEE STD. W-1 FOR CONSTRUCTION NOTES.

PIPE SIZE	TIE RODS	STEEL CLAMPS
6"	5/8"	3" X 1/4"
8"	3/4"	3-1/4" X 1/4"
12"	1-1/4"	4" X 1/2"

CITY OF SEBASTOPOL · CALIFORNIA · PUBLIC WORKS

CONCRETE ANCHOR BLOCKS FOR VERTICAL BENDS

SCALE: NONE | DRAWN: MGA | CHK: SAL | APPVD: PHK | DATE: JULY 1998

STD. NO. W-3.3

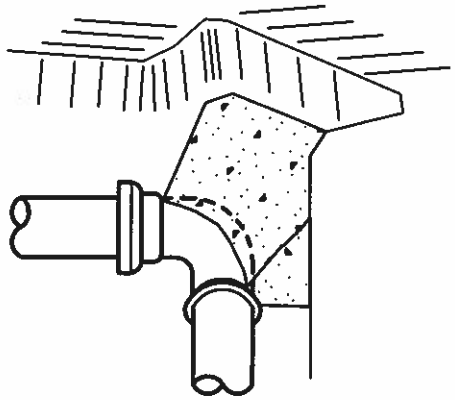

BEND

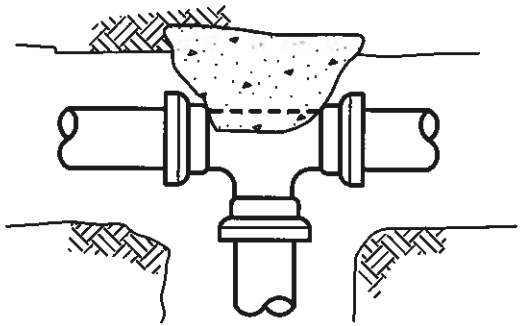

TEE

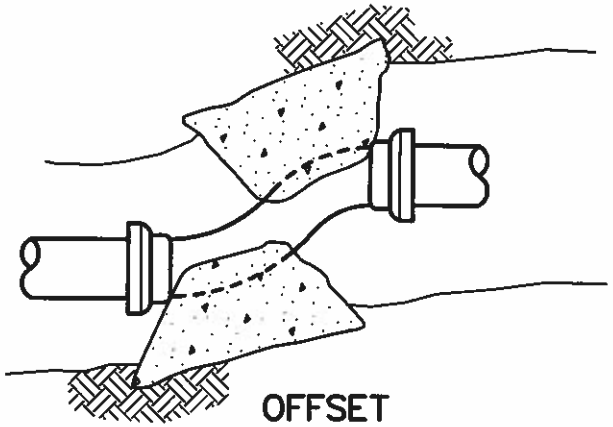

OFFSET

TYPICAL CONC. BLOCKING
SHOWN IN PERSPECTIVE

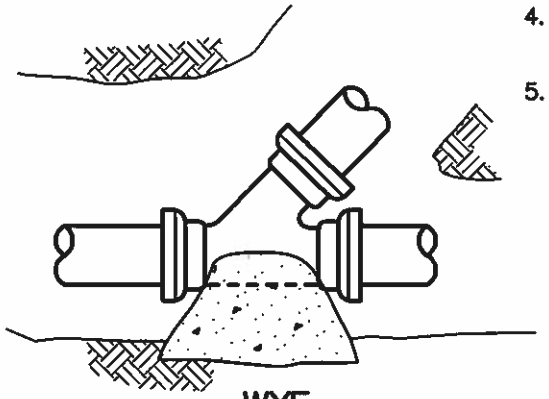

WYE

NOTES:

1. SAFE BEARING LOAD OF SOIL FOR HORIZONTAL THRUST SHALL NOT BE EXCEEDED.
2. CONCRETE BLOCKING, CAST-IN-PLACE, TO EXTEND FROM BELLS OF FITTINGS TO UNDISTURBED SOIL AND ENTIRE BEARING AREA MUST BE AGAINST UNDISTURBED SOIL.
3. IN USING THE THRUST BLOCKING TABLE BELOW, ASSUME 2000 P.S.F. BEARING CAPACITY UNLESS OTHERWISE SHOWN ON THE PLANS. THE DESIGN ENGINEER SHALL SPECIFY THRUST BLOCKING REQUIREMENTS FOR ALL OTHER SOIL BEARING CONDITIONS.
4. FOR PLUGGED LEG(S) OF TEE OR CROSS, USE HARNESS TYPE BLOCKING AS SHOWN ON STD. W-3.2 AND CONCRETE BLOCKING INDICATED IN TABLE BELOW.
5. SEE STD. W-1 FOR CONSTRUCTION NOTES.

MIN. REQ'D BEARING AREA IN SQ. FT. PER 100 P.S.I. TEST PRESSURE *						
PIPE SIZE	SOIL BEARING CAPACITY	HARNESS BLOCKS	TEES & DEAD ENDS	90° BENDS	45° BENDS	22-1/2° BENDS
6"	1000	4	4	6	3	2
	2000	2	2	3	2	1
8"	1000	7	7	10	5	3
	2000	4	4	5	3	2
12"	1000	16	16	22	12	6
	2000	8	8	11	6	3

* MULTIPLY NO. IN TABLE BY TEST PRESSURE & DIVIDE BY 100.

CITY OF SEBASTOPOL
CALIFORNIA
PUBLIC WORKS

SCALE: NONE
DRAWN: MGA
CHK: SAL
APPVD: PHK
DATE: JULY 1998

CONCRETE THRUST BLOCKING

STD. NO.
W-3.4

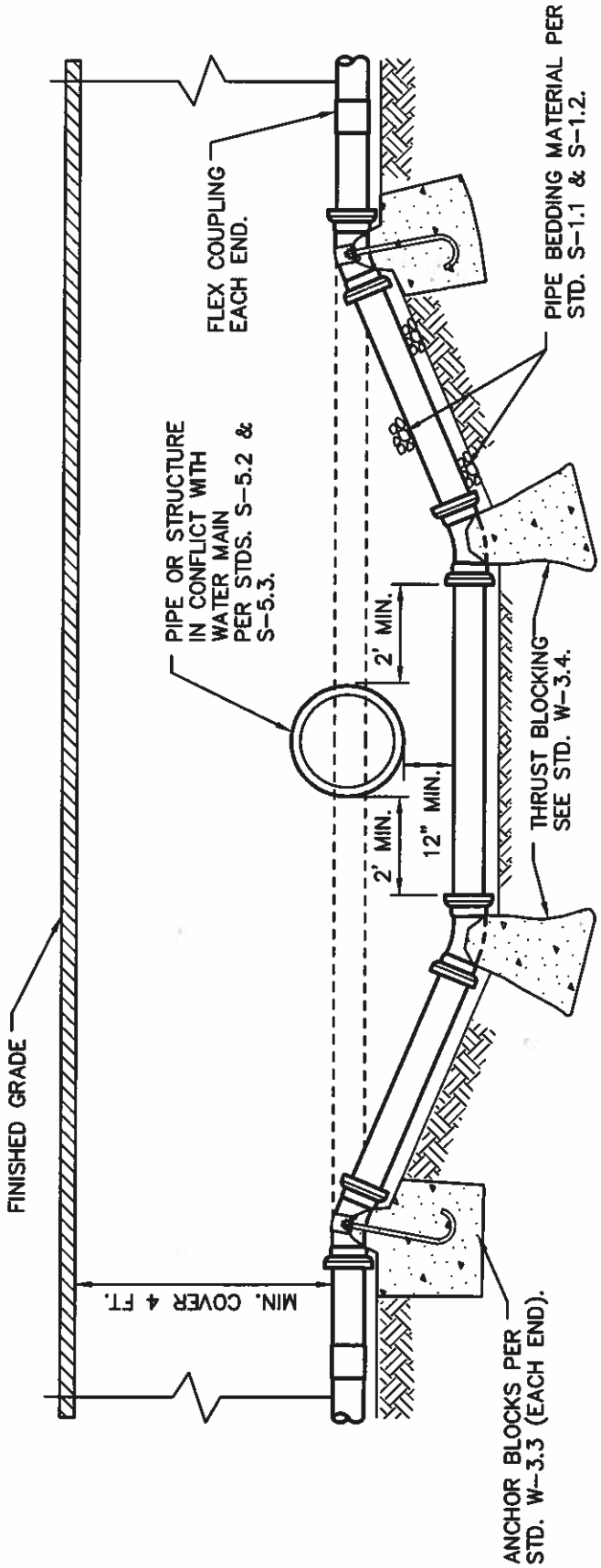

NOTES:

1. ALL PIPE & FITTINGS SHALL BE DUCTILE IRON & SHALL BE WRAPPED IN POLYETHELENE PER CITY STD. CONSTRUCTION SPECIFICATIONS.
2. ONLY MECHANICAL JOINT FITTINGS WITH RETAINER GLANDS MAY BE USED.
3. ALL BENDS SHALL BE 45° OR 22-1/2° FITTINGS.

SEBASTOPOL CALIFORNIA PUBLIC WORKS

TYPICAL WATER MAIN LOWERING DETAIL

STD. NO.
W-3.5

SCALE: NONE	DRAWN: MGA	CHK: SAL	APPVD: PHK	DATE: JULY 1998

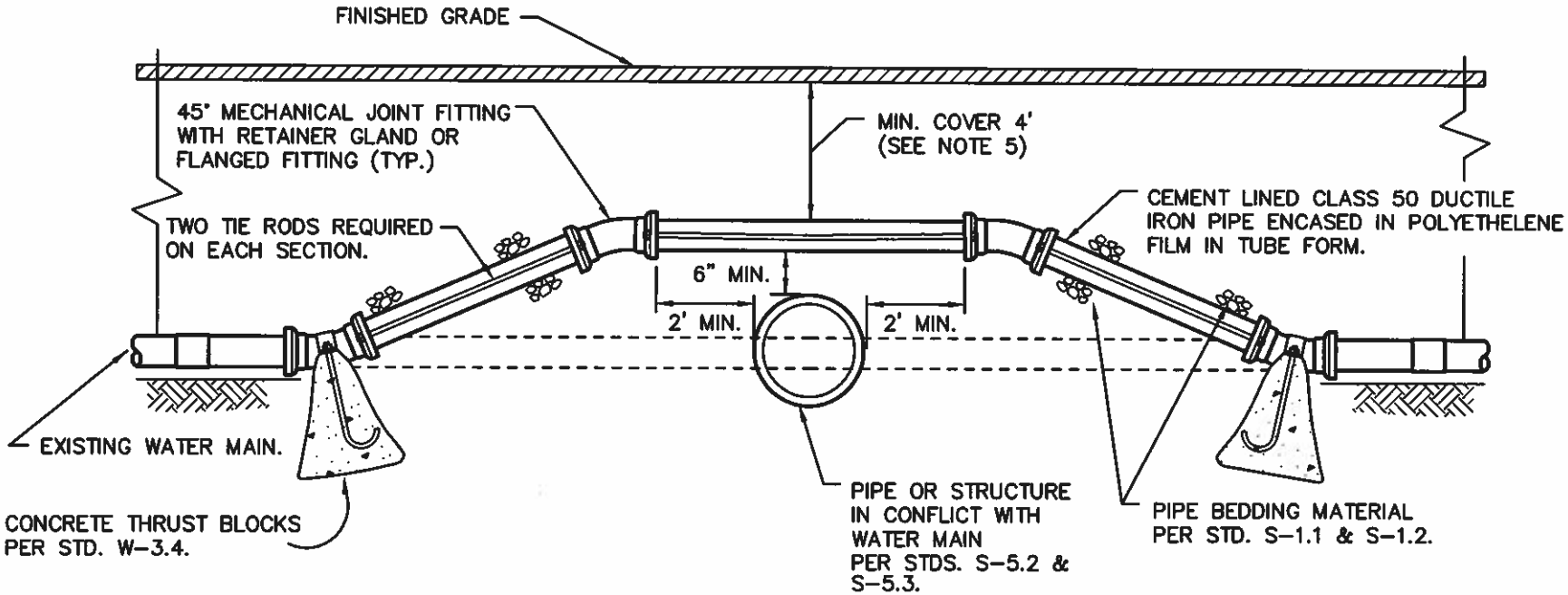

NOTES:

1. ALL PIPE & FITTINGS SHALL BE DUCTILE IRON & SHALL BE WRAPPED IN POLYETHELENE PER THE CITY STD. CONSTRUCTION SPECIFICATIONS.
2. ONLY MECHANICAL JOINT FITTINGS WITH RETAINER GLANDS MAY BE USED.
3. ALL BENDS SHALL BE 45° OR 22-1/2° FITTINGS – NO 90° BENDS ALLOWED.
4. TO BE USED ONLY AT THE DIRECT APPROVAL OF THE CITY ENGINEEER.
5. CL. 52 D.I.P. REQUIRED WHERE COVER IS LESS THAN STANDARD.

PIPE SIZE	TIE RODS
6"	5/8"
8"	3/4"
12"	1-1/8"

CITY OF SEBASTOPOL · CALIFORNIA · PUBLIC WORKS

TYPICAL WATER MAIN INSTALLATION OVER STRUCTURE

SCALE: NONE | DRAWN: MGA | CHK: SAL | APPVD: PHK | DATE: JULY 1998

STD. NO. W-3.6

APPROVED BOX & COVER

SEE ENGINEER'S APPROVED LIST

ELEVATION

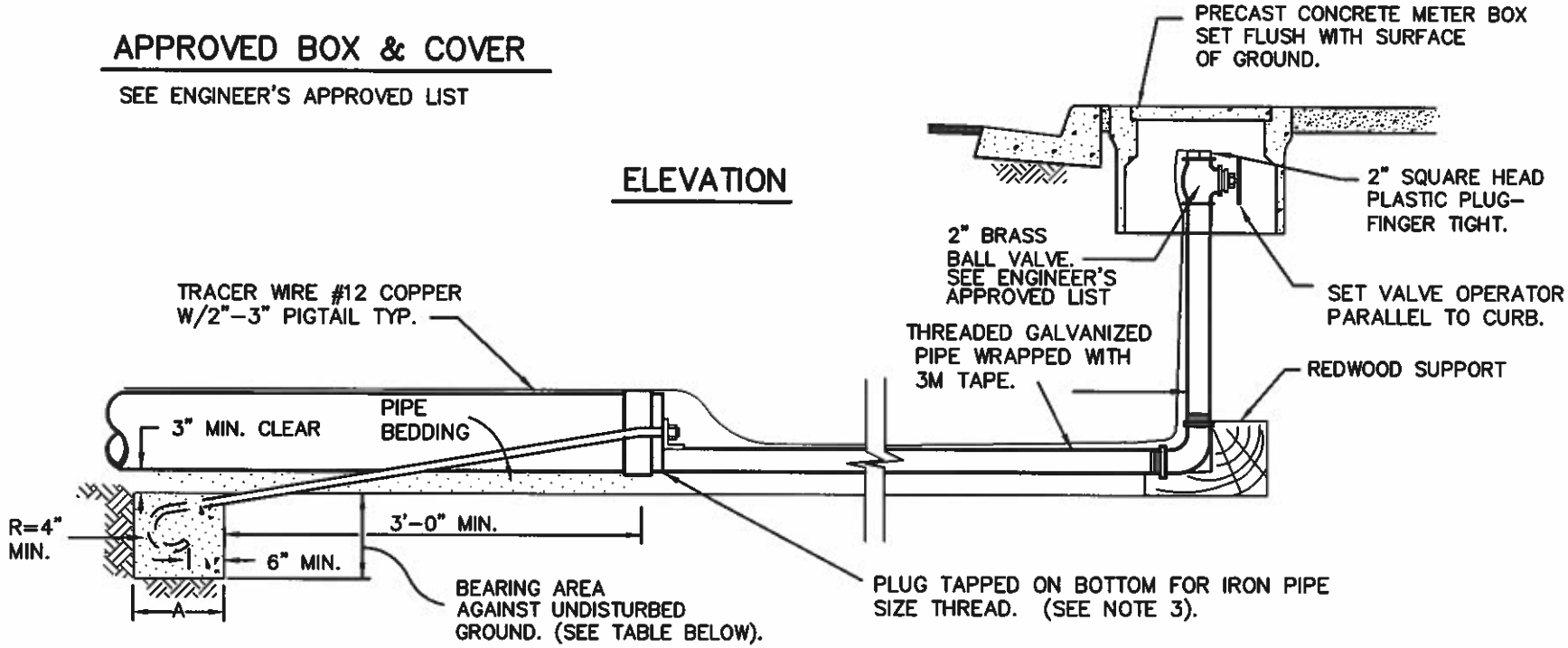

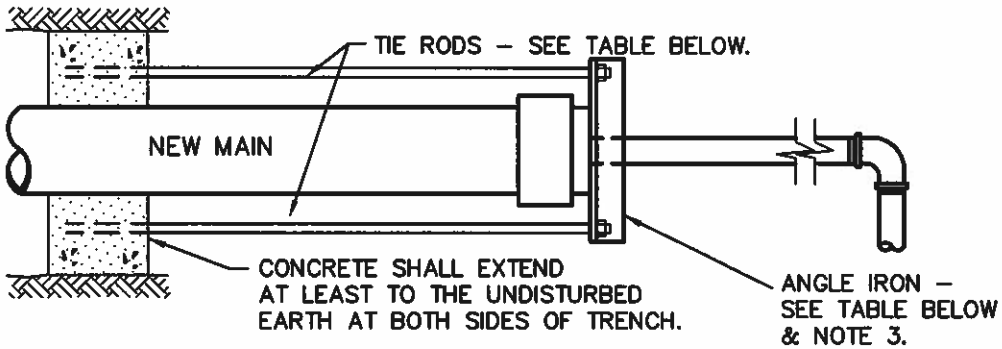

PLAN

MINIMUM DIMENSIONS					
PIPE SIZE	TIE RODS	ANGLE IRON	BEARING AREA	A	SIZE B.O.
6"	5/8"	3"x3"x1/4" *	4 SQ. FT.	2'	2"
8"	3/4"	3–1/2"x3"x1/4" *	7 " "	3'	2"
12"	1 1/8"	4"x3"x1/2"	15 " "	3'	3"
OVER 12"	BY THE DESIGN ENGINEER				

* SEE NOTE 3.

NOTES:

1. SEE STD. W–1.1 FOR CONSTRUCTION NOTES.
2. ALL EXPOSED THREADS SHALL BE PAINTED WITH BITUMASTIC PAINT OR APPROVED SUBSTITUTE AFTER NUTS ARE TIGHTENED.
3. FOR 6" & 8" MAINS, M.J. PLUGS WITH DILLY LUGS AND 2" CENTER TAP MAY BE USED IN LIEU OF ANGLE IRON.
4. BLOW–OFF SHALL NOT BE INSTALLED WITHIN THE TRAVELED WAY. IF MAIN ENDS WITHIN STREET AREA, BLOW–OFF TO BE EXTENDED TO AREA OUTSIDE OF TRAVELED WAY AND INSTALLED AS SHOWN ABOVE.

CITY OF SEBASTOPOL · CALIFORNIA · PUBLIC WORKS

SCALE: NONE | DRAWN: MGA | CHK: SAL | APPVD: PHK | DATE: JULY 1998

BLOWOFF WITH HARNESS

STD. NO. W-3.7

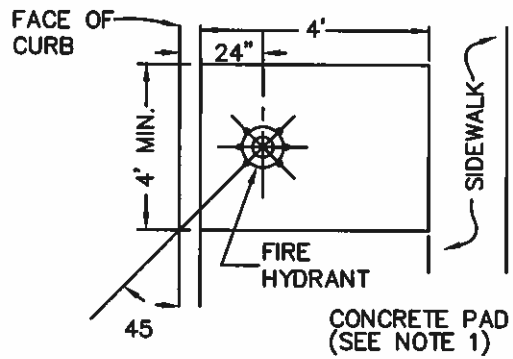

PLANTER STRIP DETAIL

FIRE HYDRANT PAINTING

FIRE HYDRANT PAINTING SHALL CONFORM TO AWWA STANDARD SPECIFICATION C 503. THE HYDRANT TOP & CAP SHALL BE COLOR CODED TO MEET NFPA 291 STANDARD. THE REMAINDING SURFACE SHALL BE SILVER. ALL DAMAGED PAINT SURFACES SHALL BE CORRECTED BY TOUCH UP PRIOR TO ACCEPTANCE.

APPROVED HYDRANTS

SEE ENGINEER'S APPROVED LIST

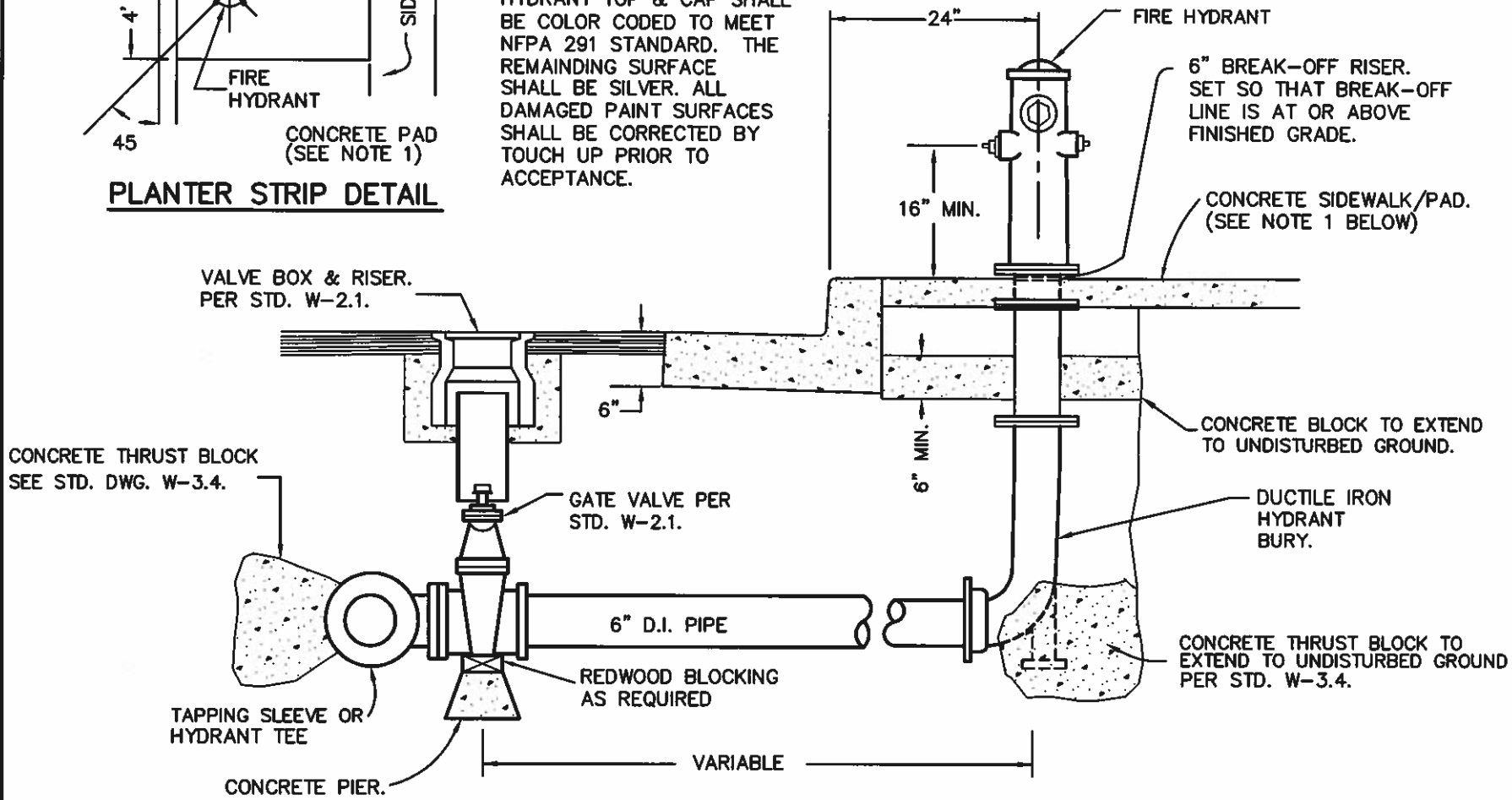

ELEVATION

NOTES

1. WHERE NO SIDEWALK EXISTS, OR WHERE HYDRANT IS INSTALLED IN PLANTER STRIP, A 4" THICK CONCRETE PAD SHALL BE INSTALLED AS SHOWN IN THE TYPICAL PLAN VIEW ABOVE.
2. RESIDENTIAL FIRE HYDRANTS WILL HAVE ONE 2-1/2" & 4-1/2" OUTLET. COMMERCIAL FIRE HYDRANTS WILL HAVE ONE 2-1/2" & TWO 4-1/2" OUTLETS.
3. VERIFY FIRE PROTECTION REQUIREMENTS WITH THE CITY FIRE DEPARTMENT.
4. SEE STD. W-1 FOR CONSTRUCTION NOTES.
5. INSTALL MIN. OF 10' FROM DRIVEWAY.

CITY OF SEBASTOPOL · CALIFORNIA · PUBLIC WORKS

TYPICAL FIRE HYDRANT INSTALLATION WITH HYDRANT BREAK-OFF

SCALE: NONE | DRAWN: MGA | CHK: SAL | APPVD: PHK | DATE: JULY 1998

STD. NO. W-4.1

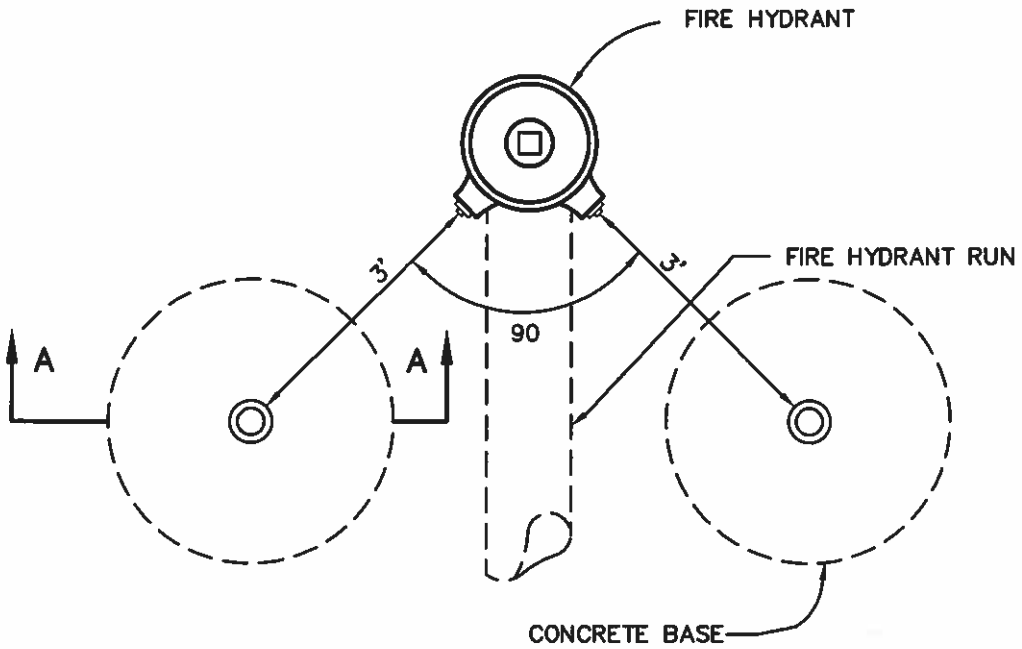

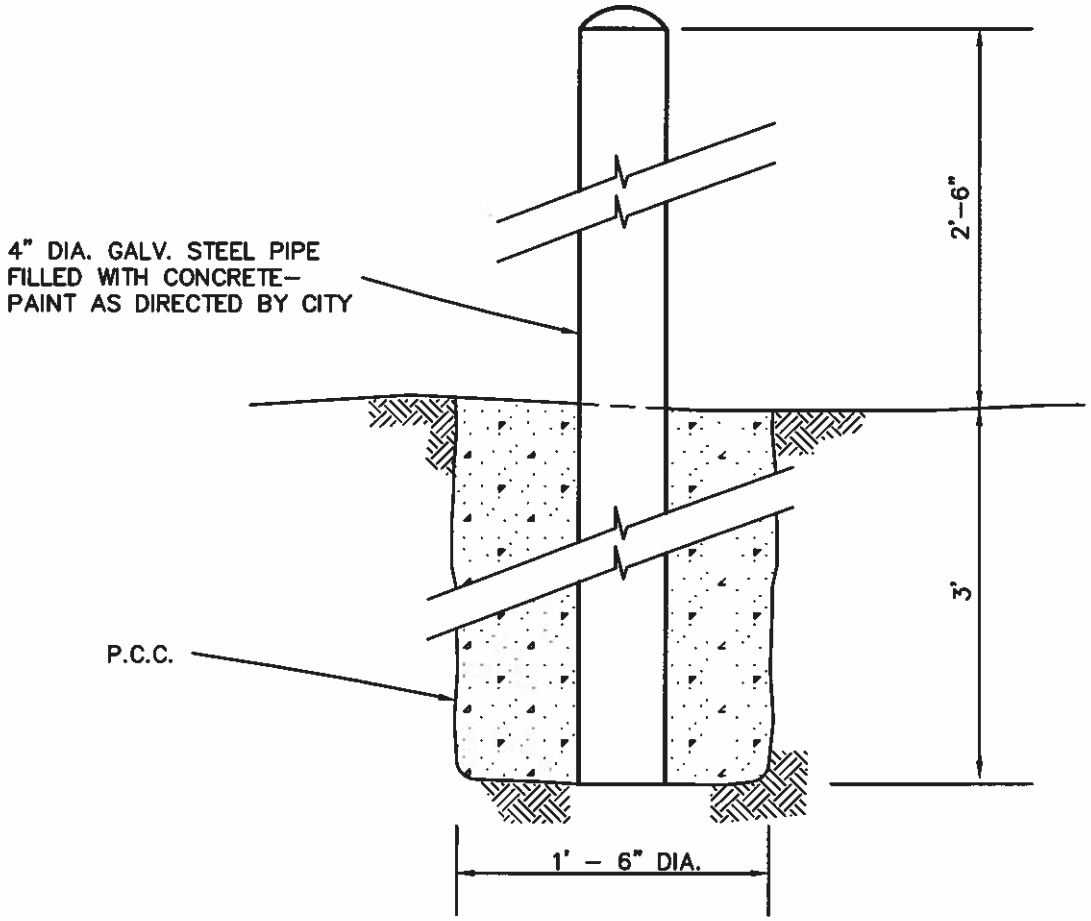

SECTION A – A

SEBASTOPOL CALIFORNIA PUBLIC WORKS	FIRE HYDRANT GUARD POST				STD. NO. W-4.2
	SCALE: NONE	DRAWN: MGA	CHK: SAL	APPVD: PHK	DATE: JULY 1998

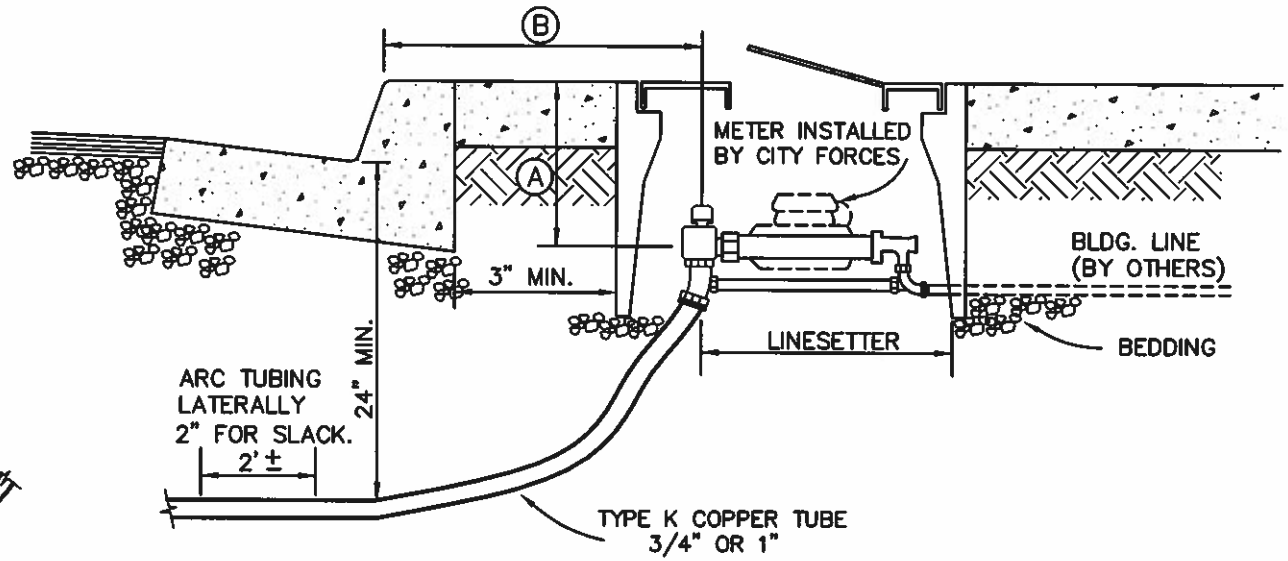

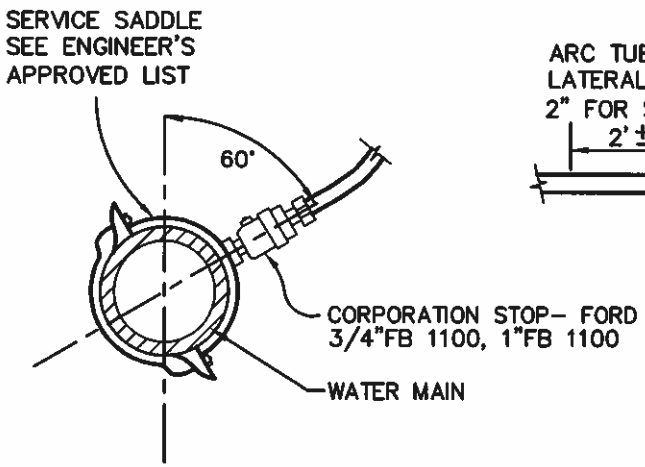

SIZE OF METER	DIMENSION (INCHES)	
	A	B
3/4" x 5/8"	8	10–12
1"	10	10–12

APPROVED LINESETTER ASSEMBLIES

3/4" X 5/8" METER:

FORD LSAVH 41–233W WITH SCHEDULE 80 PVC BRACE BAR, OR EQUAL.

1" METER:

FORD LSVH 41–444W WITH SCHEDULE 80 PVC BRACE BAR & NO. BA13–444W ANGLE BALL METER VALVE, OR EQUAL.

APPROVED METER BOXES & COVERS:

SEE ENGINEER'S APPROVED LIST OF PARTS.

NOTES:

1. UNLESS OTHERWISE SPECIFIED ON THE PLANS, PROVIDE FOR 3/4" x 5/8" METER INSTALLATION.

2. 1" LINESETTER IS PROVIDED WITH TWO BRACING EYES. INSTALL APPROXIMATELY 1 FOOT OF 3/4" P.V.C. IN EACH EYE TO STABILIZE METER ASSEMBLY IN UPRIGHT POSITION.

CITY OF SEBASTOPOL
PUBLIC WORKS

WATER SERVICE LATERAL
3/4" & 1"

SCALE: NONE | DRAWN: MGA | CHK: SAL | APPVD: PHK | DATE: JULY 1998

STD. NO.
W-5.1

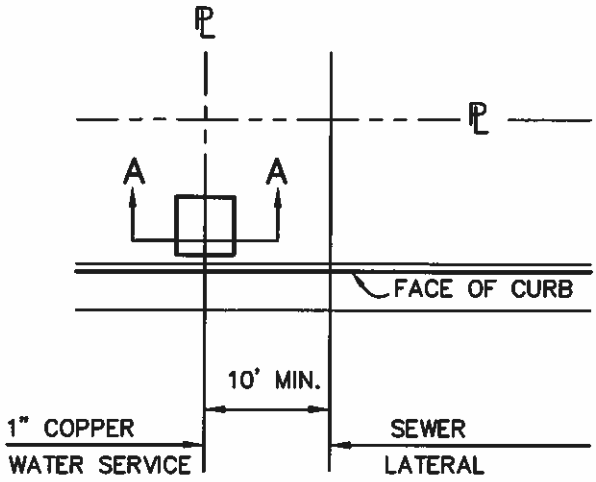

PLAN VIEW

APPROVED CONCRETE METER BOX & LID.

CHRISTY NO. B24 METER BOX WITH CHRISTY NO. B24E CONC. READING LID (NON TRAFFIC) OR B24-61G COVER (TRAFFIC LOADING)

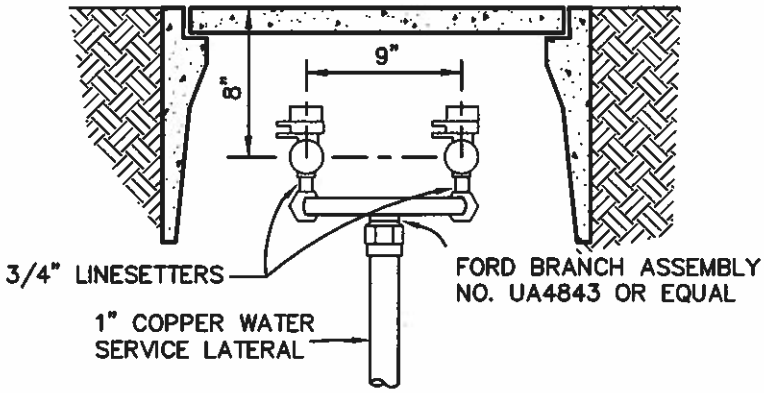

SECTION A-A

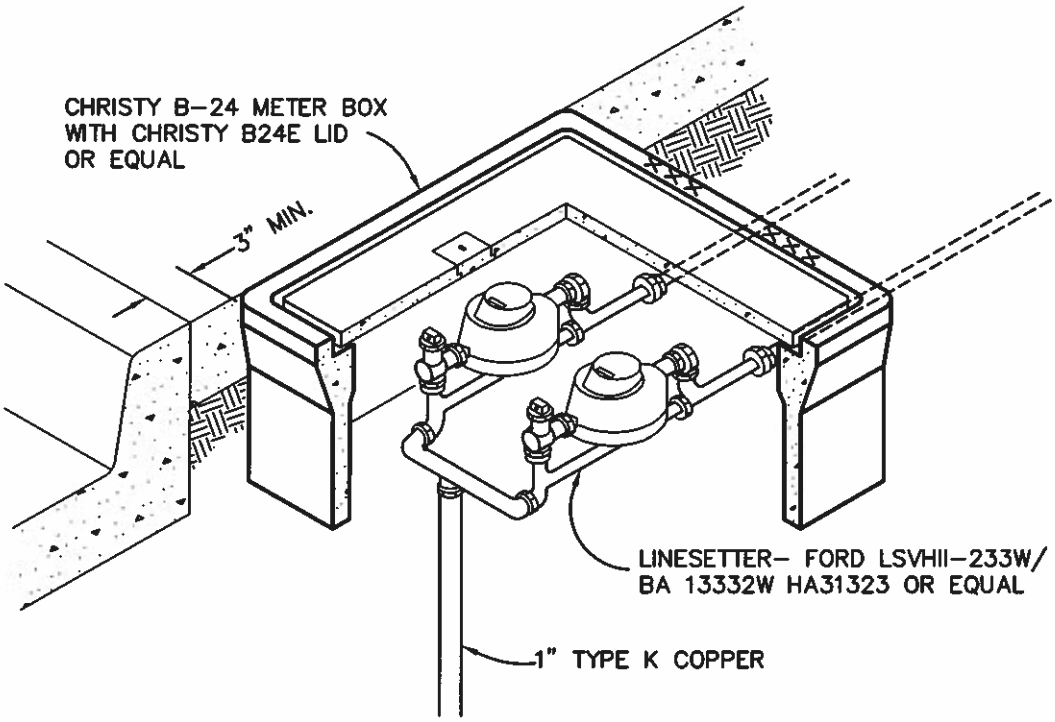

NOTES

1. METER BOX TO BE INSTALLED SO THAT READING LID IS CENTERED OVER THE METER REGISTERS.
2. IN TRAFFIC LOADING AREAS, BOX TO BE INSTALLED SO THAT THE STEEL COVER IS SET FLUSH WITH SURFACE.

SEBASTOPOL CALIFORNIA PUBLIC WORKS	1" DUAL WATER SERVICE FOR TWO - 3/4" METERS				STD. NO. W-5.2
	SCALE: NONE	DRAWN: MGA	CHK: SAL	APPVD: PHK	DATE: JULY 1998

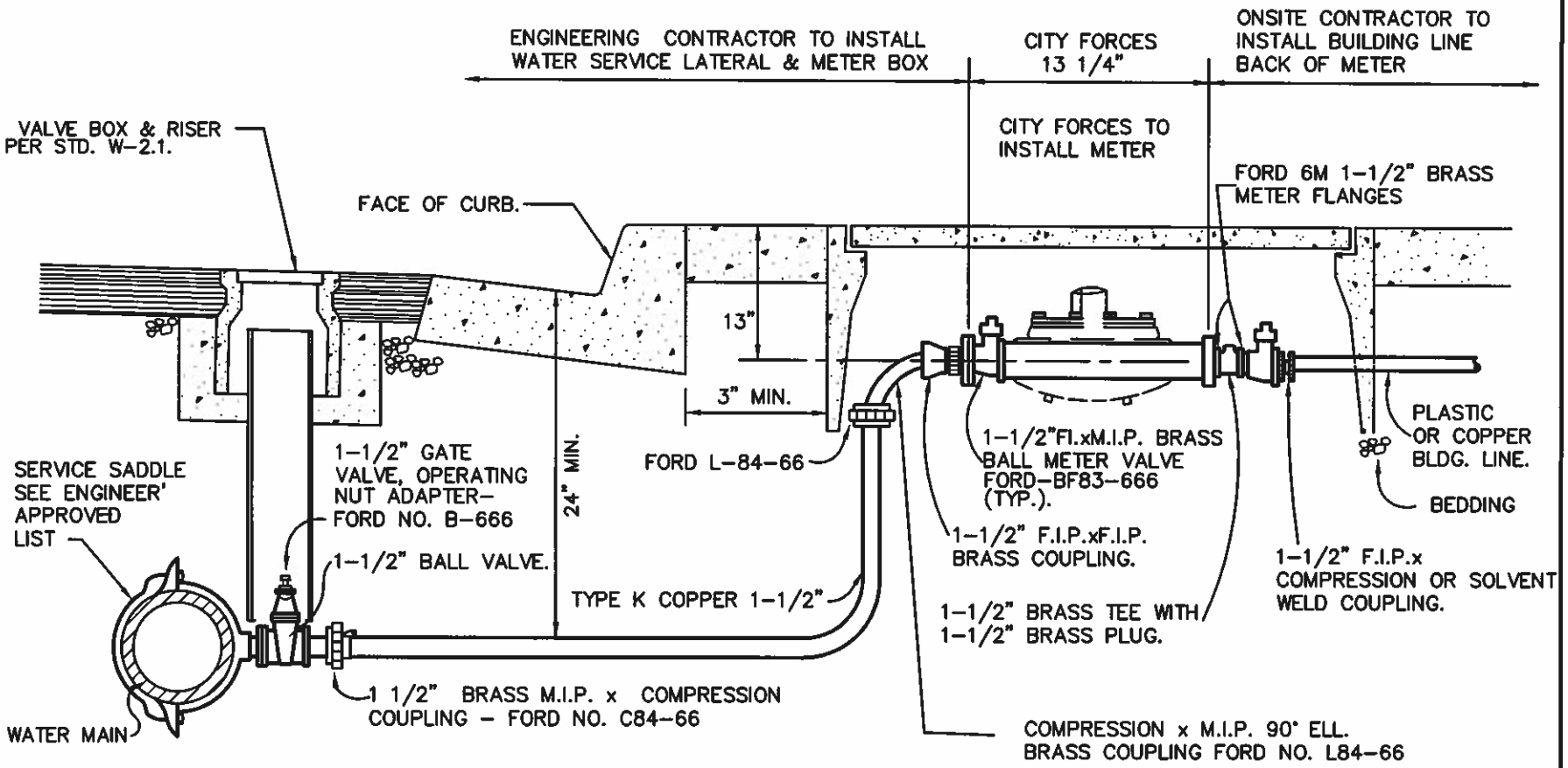

NOTES:

1. USE FORD OR EQUAL FOR FITTINGS.
2. POSITION METER REGISTER DIRECTLY UNDER READING LID.

APPROVED METER BOXES & COVERS:

NON-TRAFFIC AREAS: CHRISTY B-40 BOX WITH B40D LID.
TRAFFIC BEARING: CHRISTY B-40 BOX WITH B40-61D LID.

1-1/2" WATER SERVICE LATERAL

SCALE: NONE | DRAWN: MGA | CHK: SAL | APPVD: PHK | DATE: JULY 1998

STD. NO. W-5.3

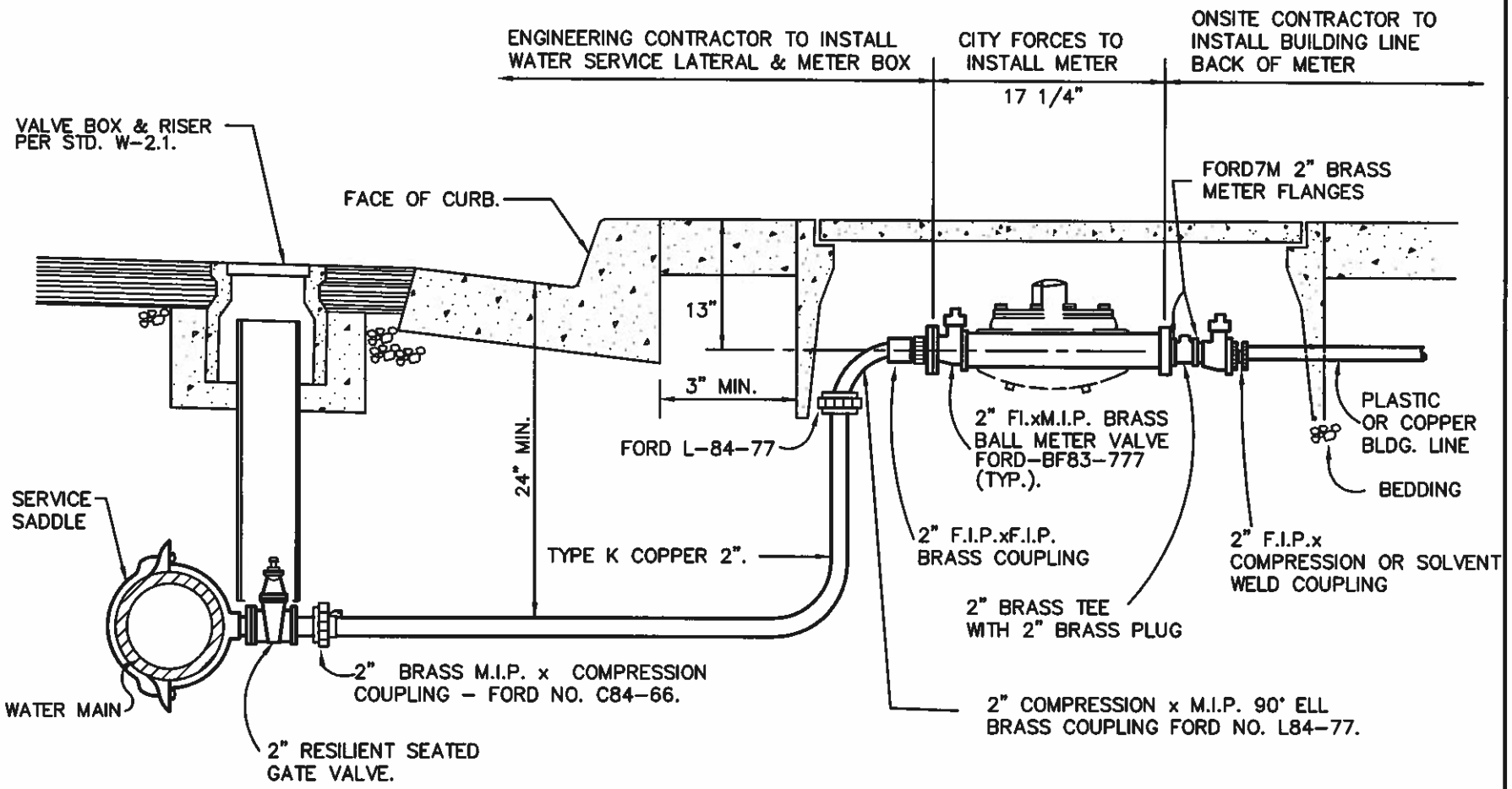

NOTES:

1. POSITION METER REGISTER DIRECTLY UNDER READING LID.
2. SPACER SHALL BE SCHL. 80 PVC PIPE WITH 1/2" ø HOLES @ 2" O.C. (VERTICALLY DRILLED THROUGH PIPES, THREAD BOTH ENDS). CITY FORCES TO REMOVE SPACER BAR & INSTALL INSTALL WATER METER.
3. IF MORE THAN ONE LENGTH OF TUBING IS REQUIRED, COMPRESSION COUPLINGS SHALL BE USED. JONES J-2609 OR McDONALD 4758-22.
4. BOX PIPE KNOCKOUTS TO BE GROUTED SUFFICIENTLY TO PREVENT INTRUSION OF DIRT.
5. METERS PROVIDED AND SET BY CITY AT DEVELOPERS EXPENSE.
6. ALL METER BOX LIDS SHALL INCLUDE A READING LID. SEE LID SPECIFICATIONS.

APPROVED METER BOXES & COVERS:

NON- TRAFFIC AREAS:
CHRISTY B-48 BOX WITH B48M LID

TRAFFIC BEARING:
CHRISTY B-48 BOX WITH B48-62G LID

APPROVED DOUBLE-STRAP SERVICE SADDLES

MUELLER BRONZE OR EQUAL

2" WATER SERVICE LATERAL FOR 2" METER

SCALE: NONE | DRAWN: MGA | CHK: SAL | APPVD: PHK | DATE: JULY 1998

STD. NO. W-5.4

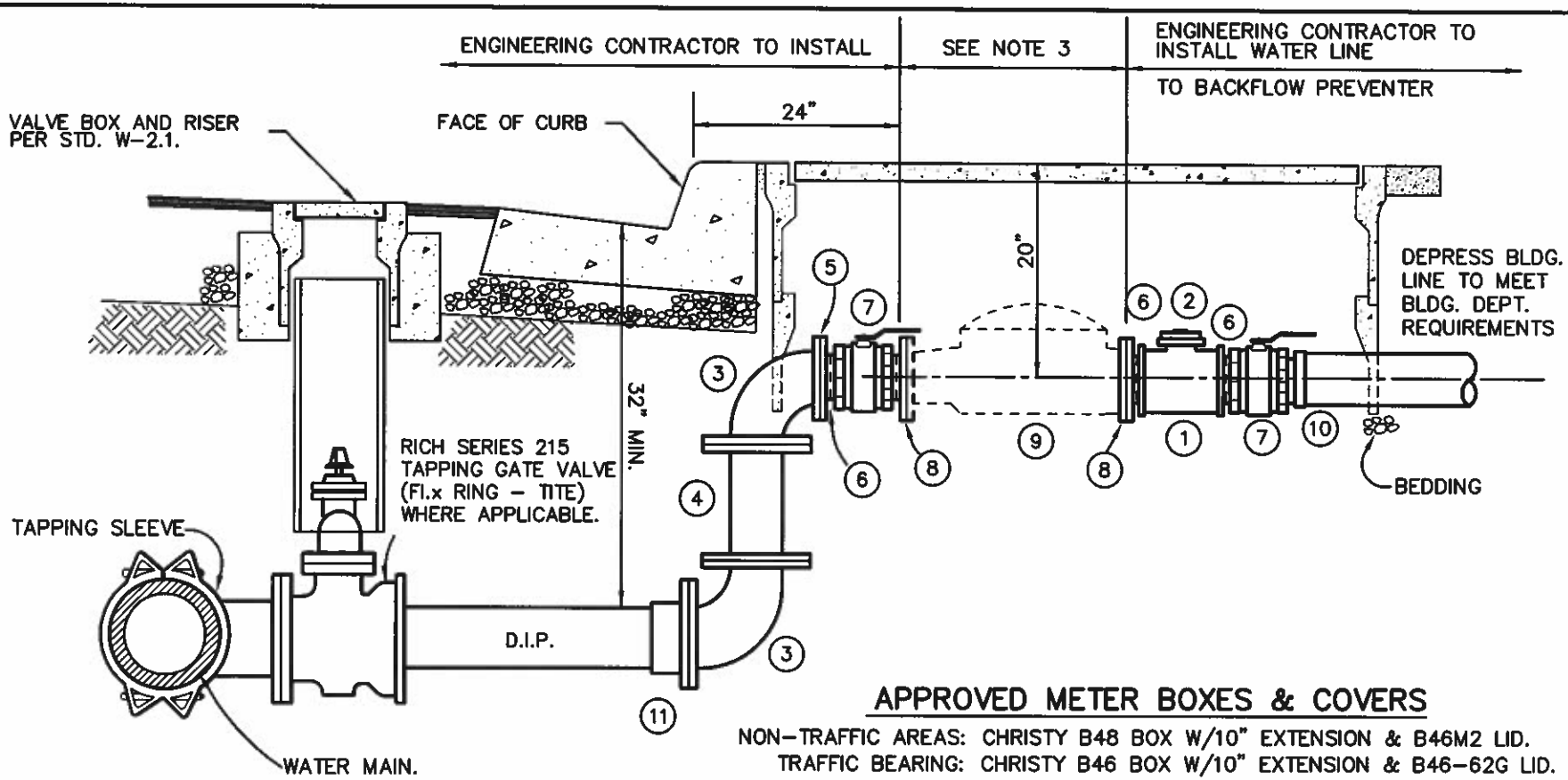

APPROVED METER BOXES & COVERS

NON-TRAFFIC AREAS: CHRISTY B48 BOX W/10" EXTENSION & B46M2 LID.
TRAFFIC BEARING: CHRISTY B46 BOX W/10" EXTENSION & B46-62G LID.

APPROVED TAPPING SLEEVES

SEE ENGINEER'S APPROVED LIST OF PARTS

NOTES:

1. CONTRACTOR TO INSTALL PERFORATED P.V.C. SPACER WITH 1/4" Ø HOLES DRILLED VERTICALLY THROUGH PIPE AT 2" O.C. CITY FORCES TO INSTALL METER UPON INSPECTORS APPROVAL.
2. FOR IRRIGATION SERVICES ONLY.
3. FOR DIMENSION CONTACT DEPT. OF P.W.

NO.	ITEM
1	3" THREADED BRASS TEE
2	3" SQUARE HEAD BRASS PLUG
3	4" x 90° FLANGED Ell
4	4" FLANGED SPOOL - LENGTH AS REQUIRED
5	4" x 3" COMPANION FLANGE
6	3" x CLOSE NIPPLE
7	3" BALL VALVE - WATTS NO.6000
8	3" x 3" BRASS COMPANION FLANGE
9	WATER METER BY CITY FORCES
10	M.I.P. x SOLVENT WELD SCH. 80 P.V.C. ADAPTER
11	4" FLANGE ADAPTER

CALIFORNIA DEPT. OF PUBLIC WORKS

4" WATER SERVICE LATERAL INSTALLATION FOR 3" METER

SCALE: NONE | DRAWN: MGA | CHK: SAL | APPVD: PHK | DATE: JULY 1998

STD. NO. W-5.5

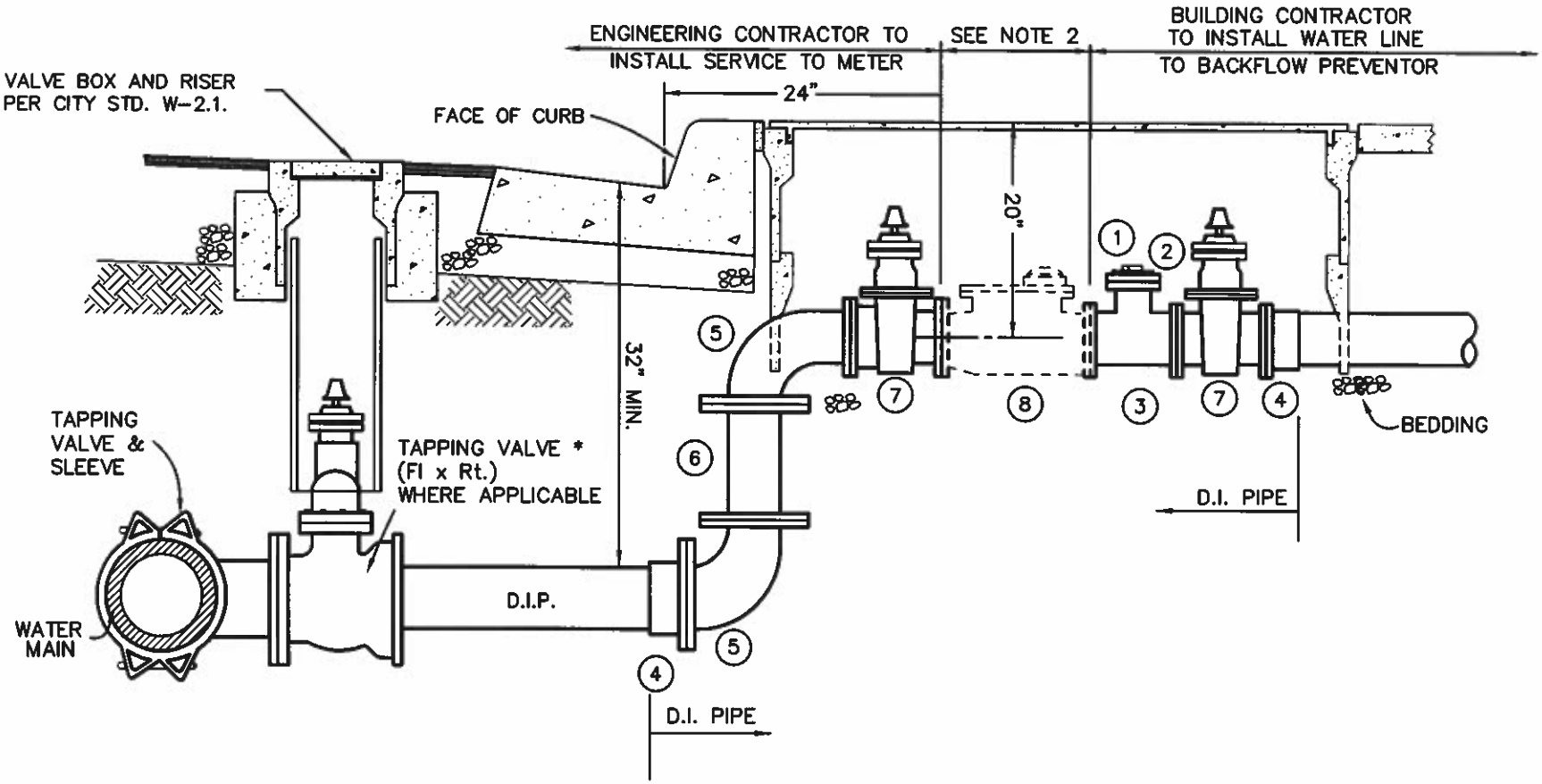

APPROVED TAPPING SLEEVES

SEE ENGINEER'S APPROVED LIST OF PARTS

APPROVED METER BOXES & COVERS

NON-TRAFFIC AREAS: CHRISTY B52 BOX W/10" EXTENSION & B52M3 LID

TRAFFIC BEARING: CHRISTY B52 BOX W/10" EXTENSION & B52-62G LID

NOTES:

1. CONTRACTOR TO INSTALL SPACER, CITY FORCES TO INSTALL METER UPON INSPECTORS APPROVAL.
2. FOR DIMENSION CONTACT DEPT. OF P.W.

* GATE VALVE TO BE RESILIENT SEAT TYPE PER AWWA SPEC. C509

NO.	ITEM
1	4" SQUARE HEAD PLUG
2	4" COMPANION FLANGE
3	4" FLANGED TEE
4	4" Fl. ADAPTER AS REQUIRED
5	4" x 90° FLANGED Ell
6	4" FLANGED SPOOL – LENGTH AS REQUIRED
7	* 4" AWWA GATE VALVE
8	METER BY CITY FORCES

4" WATER SERVICE LATERAL INSTALLATION FOR 4" METER

STD. NO. **W-5.6**

SCALE: NONE | DRAWN: MGA | CHK: SAL | APPVD: PHK | DATE: JULY 1998

APPROVED METER BOXES & COVERS

NON-TRAFFIC AREAS: CHRISTY B-48 BOX WITH B-48 LID
TRAFFIC BEARING: CHRISTY B-48 BOX WITH B48-62G LID

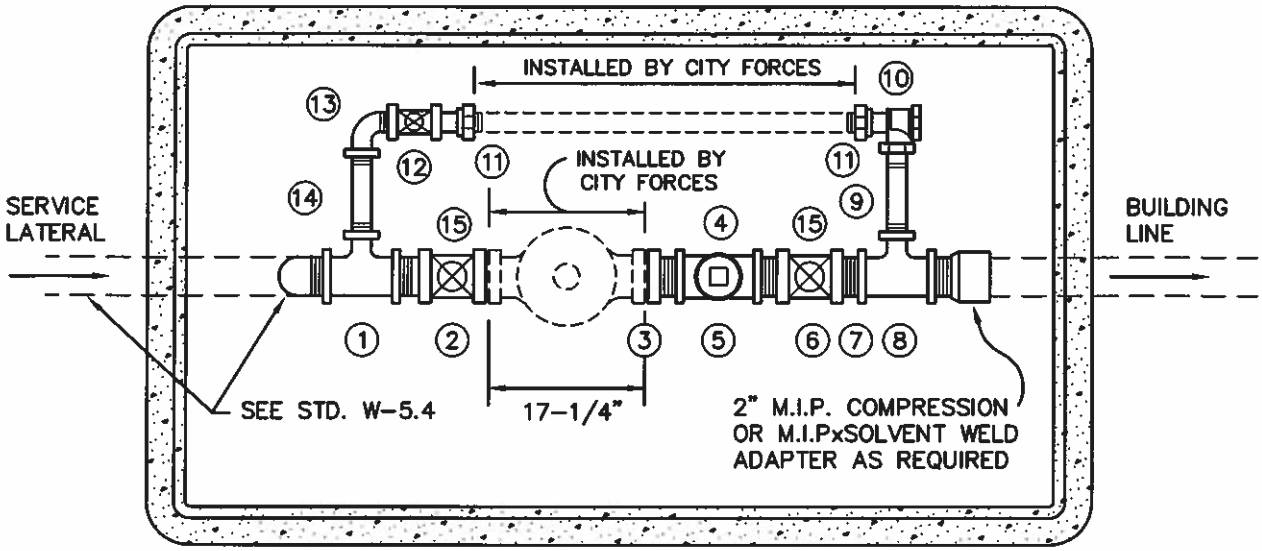

No.	Item
1	2"x1" BRASS TEE
2	BALL VALVE (FORD BF-83-777)
3	BRONZE METER FLANGE (FORD 7M)
4	2" BRASS PLUG
5	2" BRASS TEST TEE
6	BALL VALVE (FORD B81-777)
7	2"x CLOSE BRASS NIPPLE
8	2"x1" BRASS TEE
9	1"x4-1/2" BRASS NIPPLE
10	ANGLE CHECK VALVE (FORD HA31-444)
11	1-1/4" BRASS PLUG
12	1" BALL VALVE (FORD BB-444W)
13	1" BRASS 90° STREET ELL
14	1"x5" BRASS NIPPLE
15	2 LOCK CAP (FORD BVLC)

NOTE: USE FORD OR EQUAL FOR FITTINGS

SEBASTOPOL CALIFORNIA PUBLIC WORKS

BY-PASS INSTALLATION FOR 2" METER

STD. NO. W-5.7

SCALE: NONE	DRAWN: LMM	CHK: PHK	APPVD: PHK	DATE: JULY 1998

APPROVED METER BOX & COVER

CHRISTY PIT NO. R10P24 (2' DEEP) WITH No. R10-52H 2-PIECE CHECKER PLATE, PARKWAY, HINGED, SPRING LOADED, SCREW DOWN, GALVANIZED LID WITH 8" ROUND RADING LID.

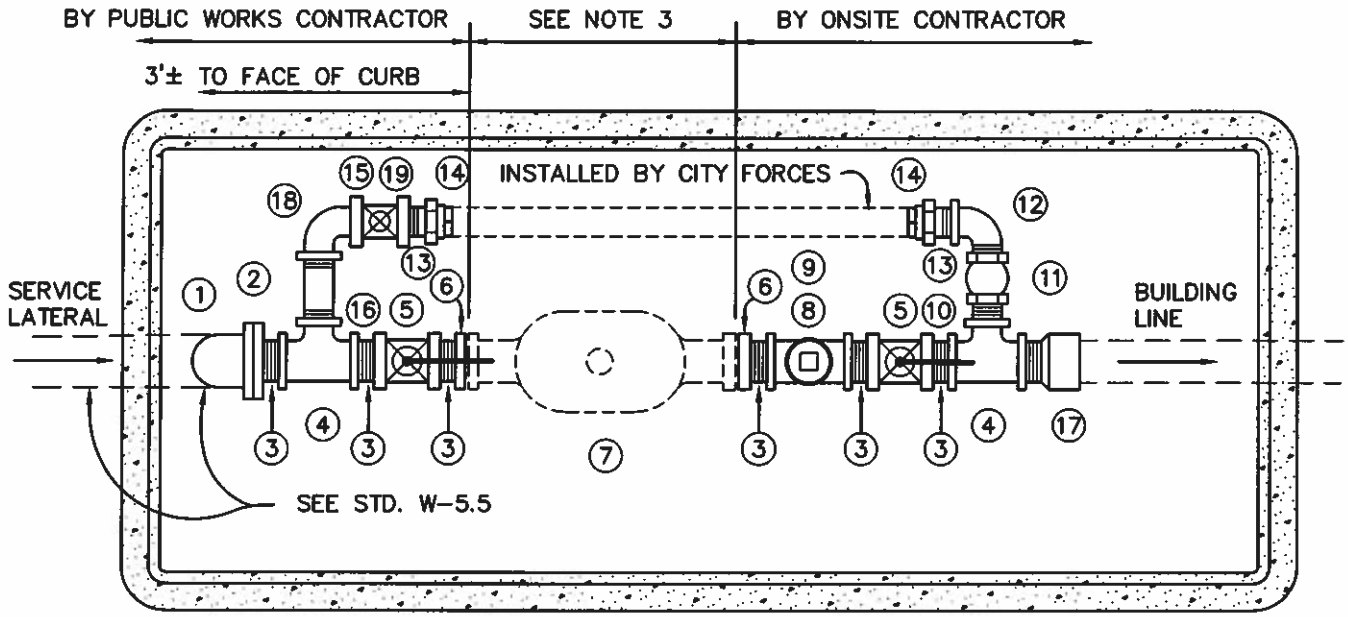

No.	Item
1	4" x 90° FLANGED ELL
2	4" x 3" COMPANION FLANGE
3	3" x CLOSE BRASS NIPPLE
4	3" x 2" BRASS TEE
5	3" BELL VALVE (WATTS No. 6000)
6	3" BRASS COMPANION FLANGE
7	WATER METER BY CITY FORCES
8	3" BRASS TEST TEE
9	3" BRASS PLUG
10	2" x CLOSE BRASS NIPPLE

No.	Item
11	2" NIBCO CHECK VALVE
12	2" x 90° BRASS STREET ELL
13	2" BRASS METER COUPLING
14	2" BRASS PLUG
5	2" BALL VALVE (FORD B81-666W)
16	2" x 6" BRASS NIPPLE
17	3" SCH. 80 PVC M.I.P. x SOLVENT WELD ADAPTOR
18	2" x 90° BRASS ELL
19	2 LOCK CAP (FORD BVLC)

NOTES:

1. REFER TO DETAIL W-5.5 FOR DIMENSIONS & PROFILE FIEW OF SERVICE LATERAL INSTALLATION.
2. THE CITY WATER UTILITY SHALL PROVIDE & INSTALL THE MASTER PADLOCK ON THE BY-PASS BALL VALVE.
3. FOR DIMENSION CONTACT DEPT. OF PUBLIC WORKS.

SEBASTOPOL CALIFORNIA PUBLIC WORKS

BY-PASS INSTALLATION FOR 3" METER

STD. NO. **W-5.8**

SCALE: NONE	DRAWN: LMM	CHK: PHK	APPVD: PHK	DATE: JULY 1998

APPROVED METER BOX & COVER

CHRISTY PIT NO. R10P24 (2' DEEP) WITH No. R10-52H 2-PIECE CHECKER PLATE, PARKWAY, HINGED, SPRING LOADED, SCREW DOWN, GALVANIZED LID WITH 8" ROUND RADING LID.

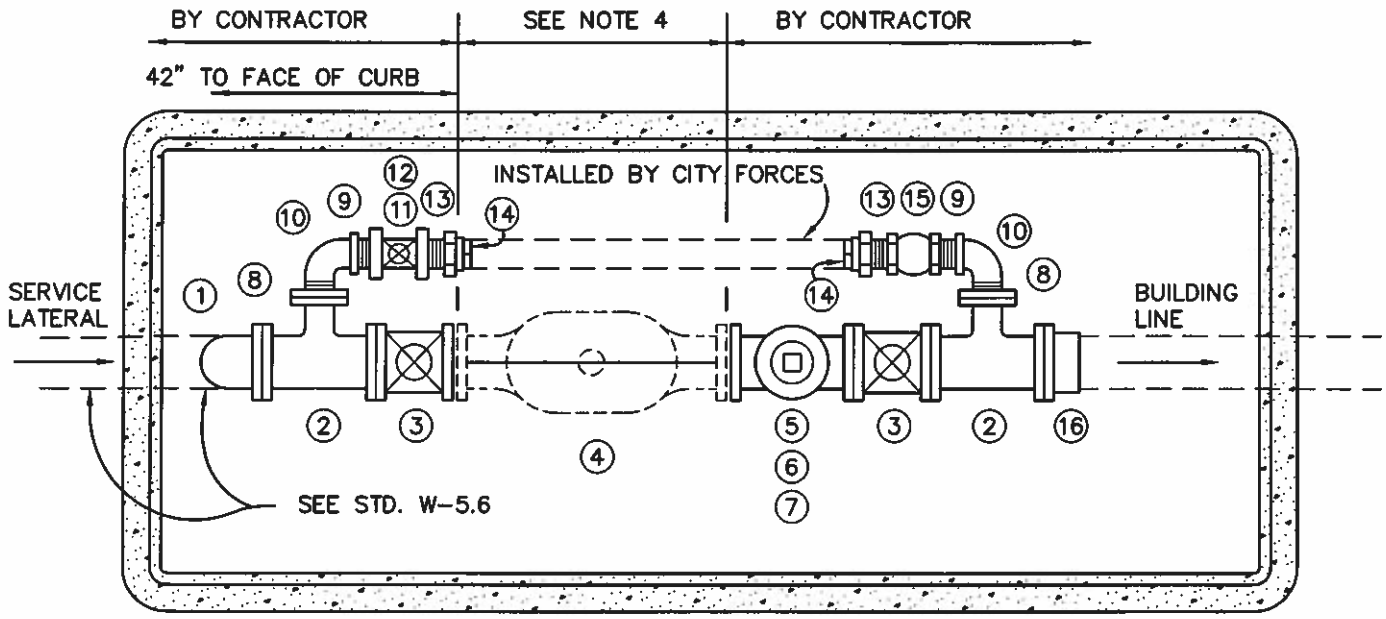

No.	Item
1	4" x 90° FLANGED ELL
2	4" x 2" FLANGED TEE
3	4" FLANGED GATE VALVE *
4	METER BY CITY FORCES
5	4" FLANGED TEST TEE
6	4" COMPANION FLANGE
7	4" PLUG – SQUARE HEAD
8	2" COMPANION FLANGE

No.	Item
9	2" x CLOSE BRASS NIPPLE
10	2" x 90° BRASS STREET ELL
11	2" BALL VALVE (FORD B81-777)
12	2 LOCK CAP (FORD No. BVLC)
13	2" BRASS METER COUPLING
14	BRASS PLUG
15	2" NIBCO CHECK VALVE
16	4" FLANGE ADAPTER AS REQUIRED

* GATE VALVE TO BE RESILIENT SEATED TYPE PER AWWA SPEC. C509-80

NOTES:

1. CONTRACTOR TO INSTALL SPACER, CITY FORCES TO INSTALL METER UPON INSPECTOR'S APPROVAL.
2. REFER TO CITY STANDARD W-5.6 FOR DIMENSIONS & PROFILE VIEW OF SERVICE LATERAL INSTALLATION.
3. THE CITY SHALL PROVIDE AND INSTALL THE MASTER PADLOCK ON THE BY-PASS VALVE.
4. FOR DIMENSION CONTACT DEPARTMENT OF PUBLIC WORKS.

SEBASTOPOL CALIFORNIA PUBLIC WORKS

BY-PASS INSTALLATION FOR 4" METER

STD. NO. W-5.9

SCALE: NONE	DRAWN: LMM	CHK: PHK	APPVD: PHK	DATE: JULY 1998

VAULT SIZES		
D.C. SIZE	WIDTH	LENGTH
4"	2.5'	4'
6"	2.5'	4'
8"	4'	5'
10"	4'	5'

BY-PASS METER	
D.C. SIZE	METER SIZE
4" & 6"	5/8" x 3/4"
8"	1"
10"	1-1/2"

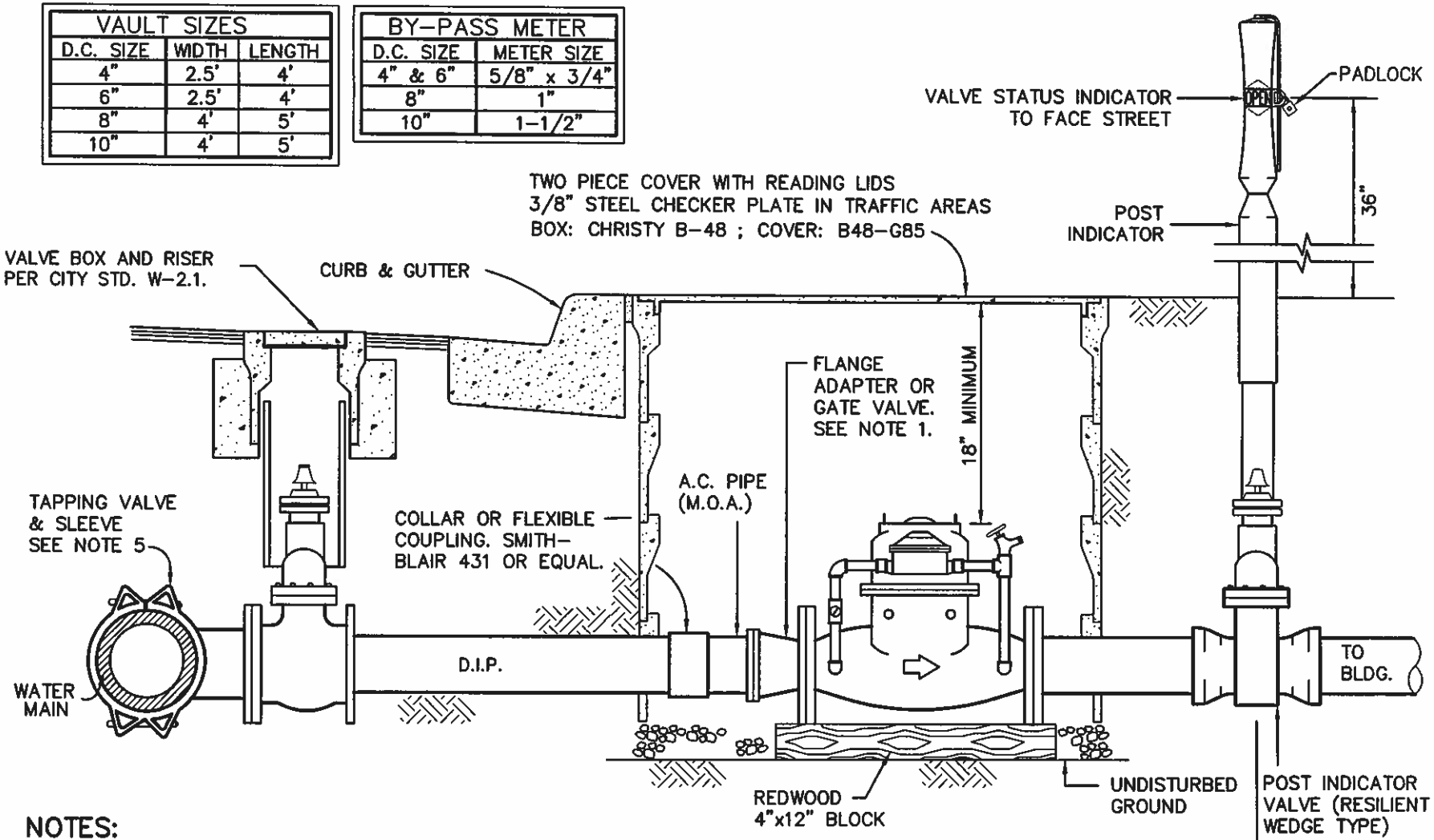

NOTES:

1. IN CASES WHERE A DOMESTIC WATER SERVICE IS TAPPED OFF OF FIRE SERVICE LATERAL, AN ADDITIONAL GATE VALVE SHALL BE INSTALLED ON THE FIRE SERVICE LATERAL ON THE STREET SIDE OF THE DETECTOR CHECK VALVE. GATE VALVE SHALL BE FLANGE CONNECTED TO THE DETECTOR CHECK VALVE.
2. GATE VALVES SHALL BE OPERATED BY THE CITY WATER DEPARTMENT PERSONNEL ONLY.
3. DETECTOR CHECK VALVE SHALL NOT BE LOCATED IN TRAFFIC AREAS UNLESS APPROVED BY THE CITY.
4. EXACT LOCATION OF DETECTOR CHECK VALVE TO BE AS SPECIFIED BY THE CITY.
5. WHEN INSTALLATION IS MADE SIMULTANEOUS WITH NEW MAIN, USE TEE WITH FLANGED BRANCH AND FLANGED BY RING TITE GATE VALVE. TAPPING VALVE AND SLEEVE TO BE INSTALLED BY CONTRACTOR AT APPLICANT'S EXPENSE.

SEBASTOPOL · CALIFORNIA · PUBLIC WORKS

TYPICAL FIRE SPRINKLER SERVICE INSTALLATION - 4" THRU 10"

SCALE: NONE | DRAWN: LMM | CHK: PHK | APPVD: PHK | DATE: JULY 1998

STD. NO. W-5.10

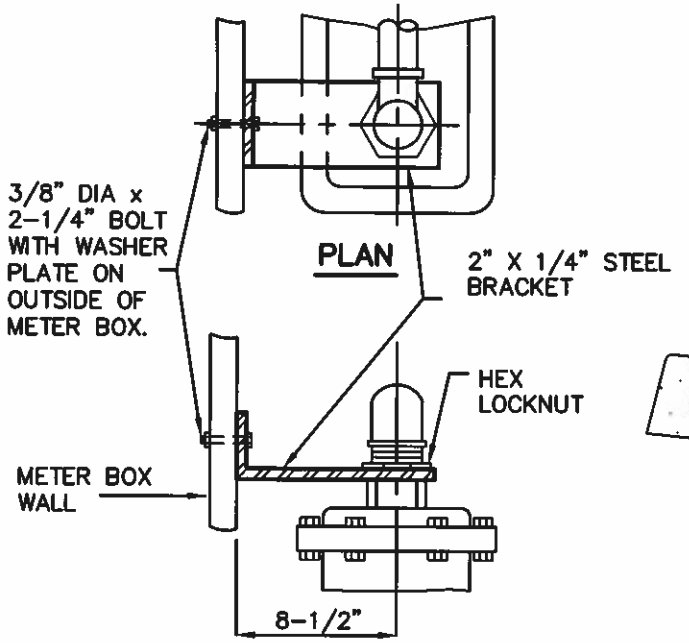

DETAIL OF BRACKET

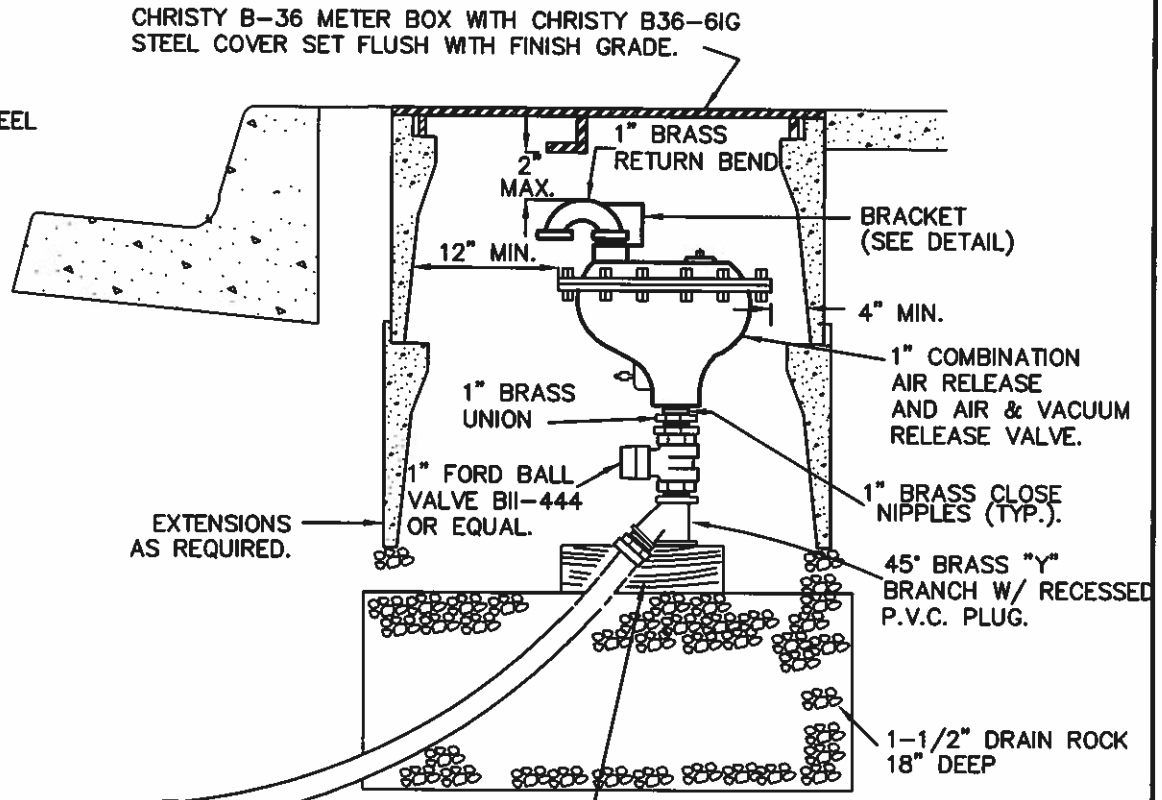

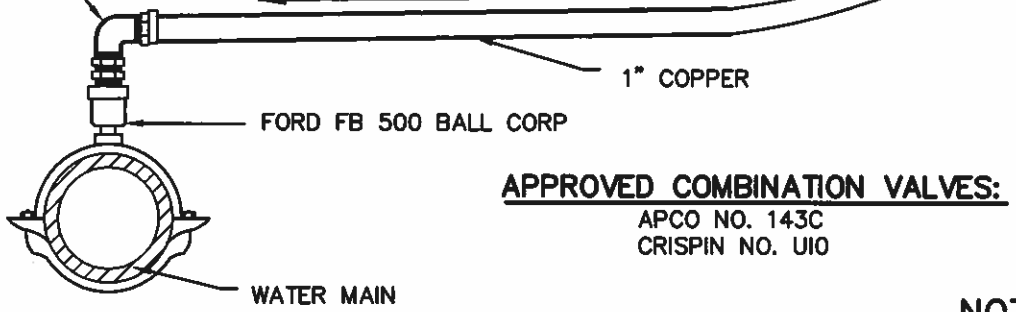

APPROVED COMBINATION VALVES:

APCO NO. 143C
CRISPIN NO. U10

NOTES:

1. AIR RELEASE VALVES SHALL HAVE 1" THREADED INLETS UNLESS OTHERWISE SHOWN ON PLANS.

TYPICAL INSTALLATION OF AIR AND VACUUM & AIR RELEASE VALVE

SCALE: NONE | DRAWN: MGA | CHK: SAL | APPVD: PHK | DATE: JULY 1998

STD. NO. W-6.1

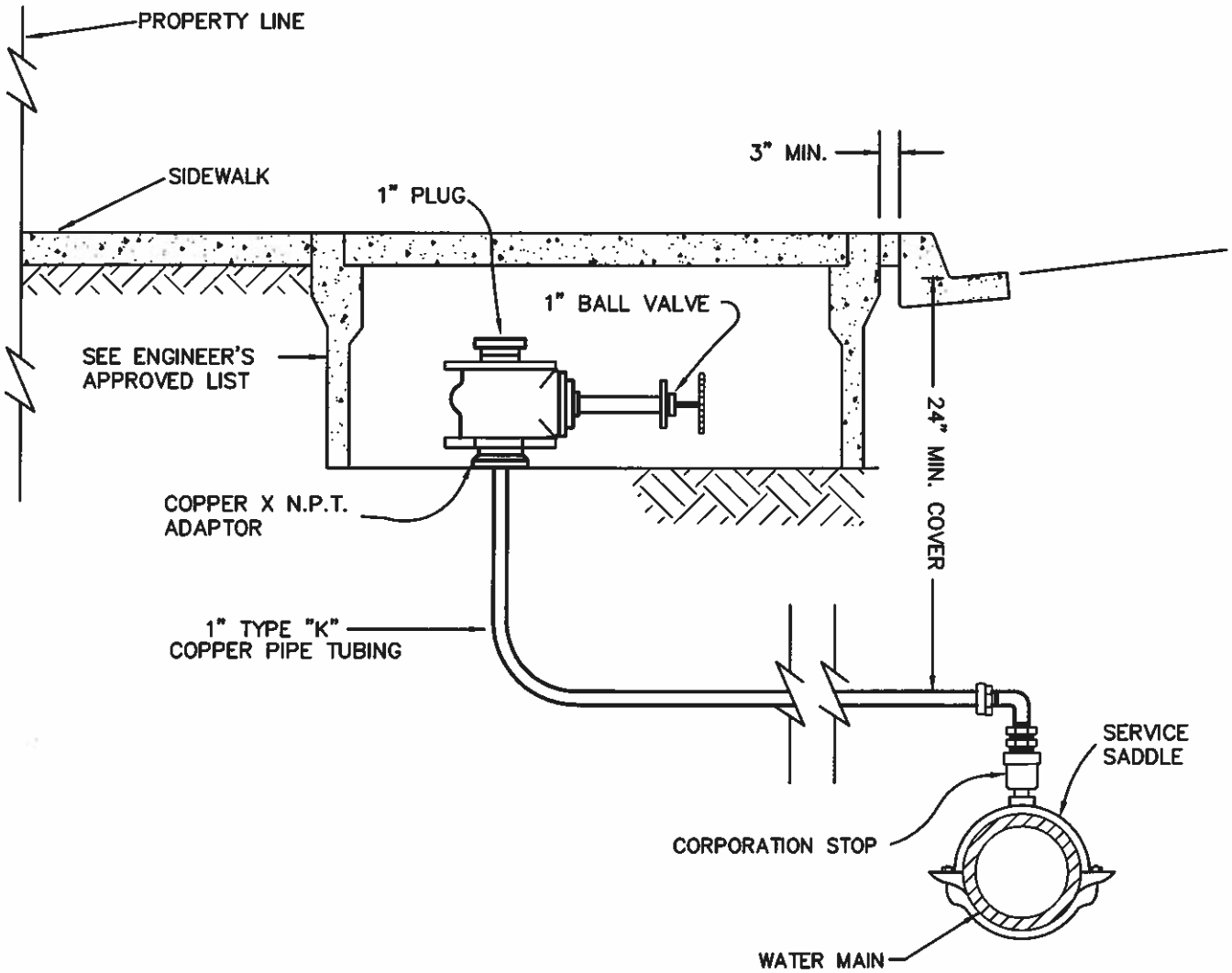

SEE STD. W-5.1 FOR MAIN SERVICE CONECTION.

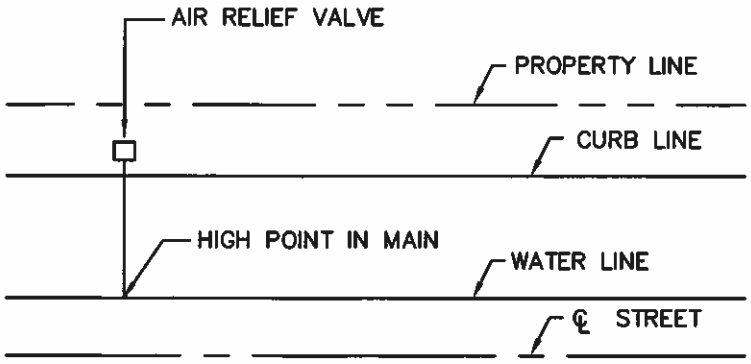

PLAN

NO SCALE

NOTE:

SEE ENGINEER'S APPROVED LIST OF PARTS FOR SADDLE, CORP STOP, ADAPTER, BALL VALVE AND BOX.

SEBASTOPOL CALIFORNIA PUBLIC WORKS	1" MANUAL AIR RELIEF VALVE ASSEMBLY				STD. NO. W-6.2
	SCALE: NONE	DRAWN: MGA	CHK: SAL	APPVD: PHK	DATE: JULY 1998

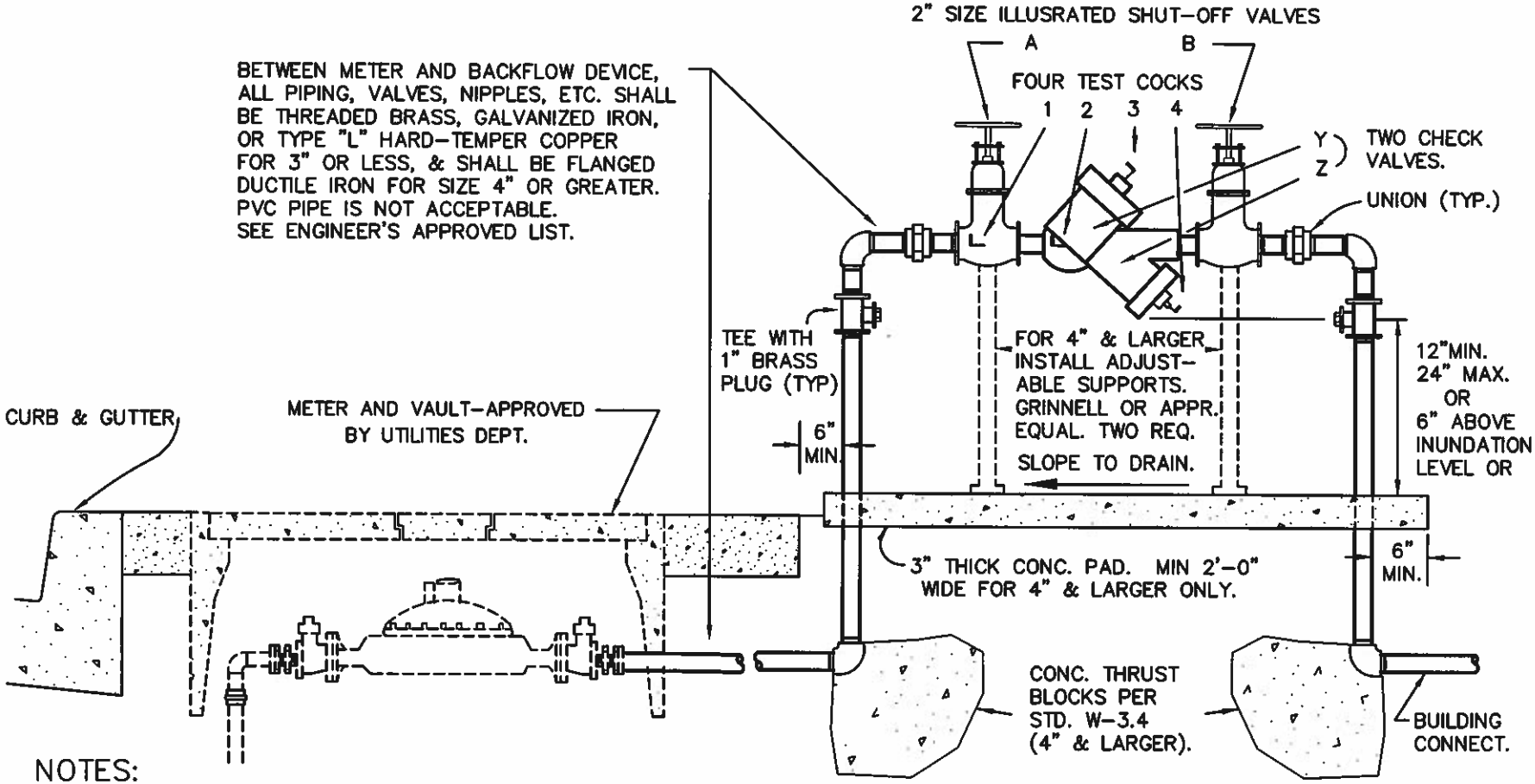

NOTES:

1. REDUCED PRESSURE TYPE BACKFLOW DEVICES SHALL BE REQUIRED FOR ANY USE WHERE TOXIC MATERIALS ARE USED OR STORED ON SITE OR WHERE POSITIVE PROTECTION FOR THE PUBLIC WATER SUPPLY IS REQUIRED. TYPICAL APPLICATIONS INCLUDE: ALL IRRIGATION SERVICES & PARKS, HOSPITALS, INDUSTRIAL SERVICES, OR AS DETERMINED BY CITY PUBLIC WORKS DEPT.
2. APPROVED REDUCED PRESSURE BACKFLOW DEVICE SHALL BE AS SHOWN ON "LIST OF APPROVED BACKFLOW PROTECTION DEVICES" (LATEST REVISION) BY THE UNIVERSITY OF SOUTHERN CALIFORNIA FOUNDATION FOR CROSS-CONNECTION CONTROL & HYDRAULIC RESEARCH.
3. BACKFLOW PREVENTION DEVICES SHALL BE INSTALLED ADJACENT TO AND ON PROPERTY SIDE OF SIDEWALK WHERE APPLICABLE. WHERE NO SIDEWALK EXISTS THE ASSEMBLY SHALL BE INSTALLED AS CLOSE AS POSSIBLE TO THE WATER METER LOCATION..
4. A VALVE OF THE SAME SIZE AS THE BACKFLOW PREVENTER SHALL BE INSTALLED ON EACH SIDE OF THE BACKFLOW PREVENTION ASSEMBLY. VALVES 2" & LESS SHALL BE THREADED FORD BALL VALVES. VALVES 3" SHALL BE WATTS BALL VALVES, AND 4" & LARGER SHALL BE RESILIENT SEATED GATE VALVES.
5. ANY COVER OR SCREENING FOR THE BACKFLOW PREVENTION ASSEMBLY MUST BE APPROVED BY THE CITY PUBLIC WORKS DEPT. PRIOR TO INSTALLATION.
6. ALL COMMERCIAL BLDGS. SHALL HAVE R.P. DEVICE.
7. IN LIMITED SPACE APPLICATIONS VALVES MAY BE INSTALLED ON RISERS, MIN. 4" ABOVE GRADE.
8. THE ADDITION OF SPOOLS MUST BE APPROVED BY THE CITY INSPECTOR PRIOR TO INSTALLATION.
9. THE PIPING FROM THE REDUCED PRESSURE BACKFLOW PREVENTER & THE REDUCED PRESSURE BACKFLOW PREVENTER VALVE ASSEMBLY ITSELF MUST BE THE SAME SIZE AS THE SERVICE LINE UNLESS OTHERWISE APPROVED BY CITY ENGINEER.

SEBASTOPOL · CALIFORNIA · PUBLIC WORKS

TYPICAL INSTALLATION OF REDUCED-PRESSURE TYPE BACKFLOW PREVENTER

STD. NO. **W-7.1**

SCALE: NONE	DRAWN: MGA	CHK: SAL	APPVD: PHK	DATE: JULY 1998

NOTES:

1. DOUBLE – DETECTOR CHECK VALVE BACKFLOW ASSEMBLIES SHALL BE REQUIRED ON ALL PROPERTIES WITH CLASS 1 OR CLASS 2 FIRE SPRINKLER SYSTEMS, AUXILLIARY WATER SUPPLY ON SITE, OR WHERE THE CITY ENGINEER DETERMINES EXTREME FIRE HAZARD.
2. APPROVED DOUBLE – DETECTOR CHECK BACKFLOW ASSEMBLIES SHALL BE AS SHOWN ON "LIST OF APPROVED BACKFLOW DEVICES" (LATEST REVISION) BY THE UNIVERSITY OF SOUTHERN CALIFORNIA FOUNDATION FOR CROSS CONNECTION CONTROL & HYDRAULIC RESEARCH.
3. ALL RESILIENT VALVES MUST BE CHAINED AND PADLOCKED IN OPEN POSITION.
4. ALL TEST VALVES SHALL BE FITTED WITH 1/4" FEMALE TEST COCKS.
5. SEE STD. W-1.1, W-1.2 & W-1.3 FOR CONSTRUCTION NOTES.

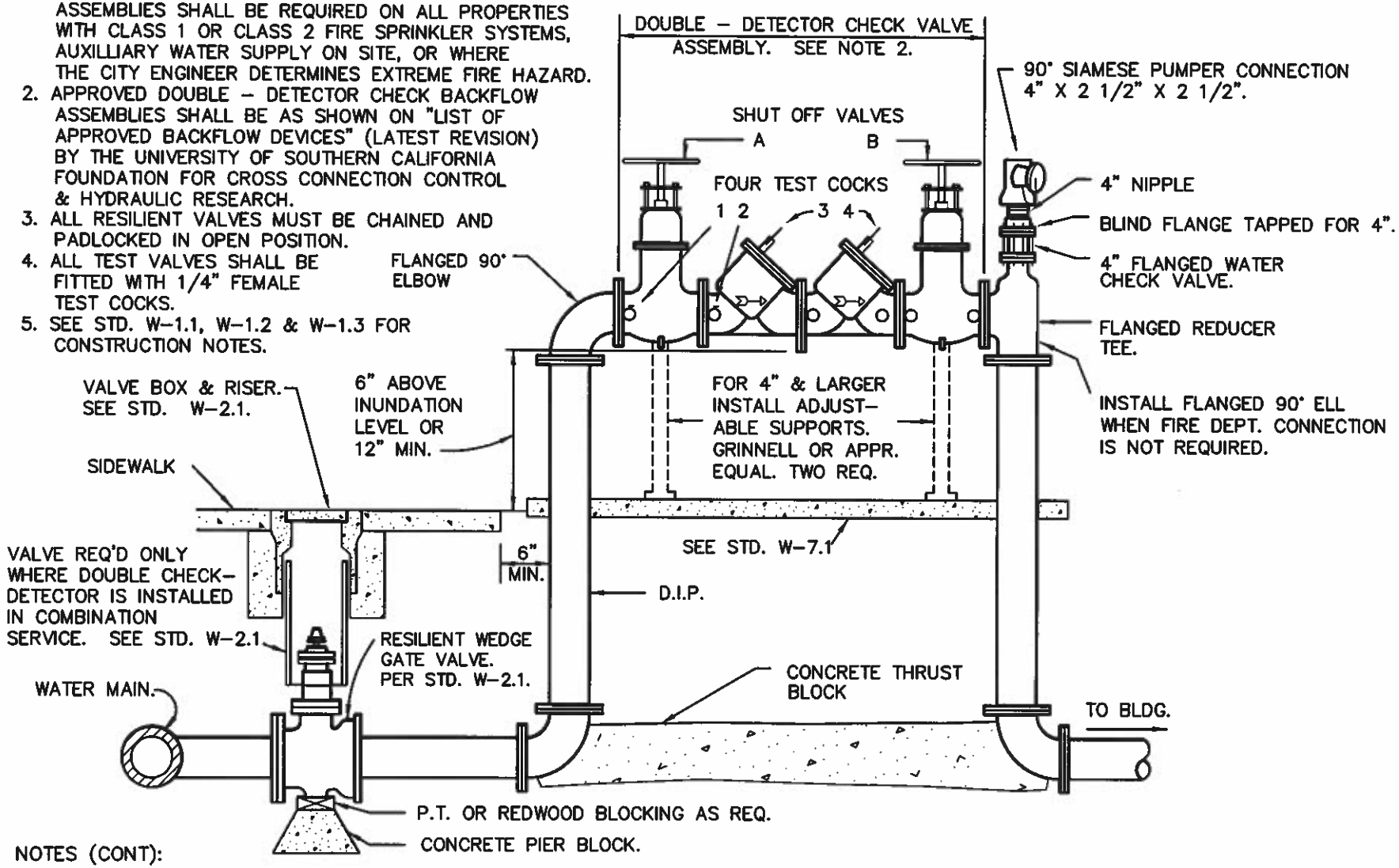

NOTES (CONT):

6. DOUBLE DETECTOR CHECK ASSEMBLY SHALL BE LOCATED AS CLOSE AS POSSIBLE TO THE SIDEWALK OR PUBLIC RIGHT-OF-WAY.
7. ANY COVER OR SCREENING FOR THIS ASSEMBLY MUST HAVE BOTH FIRE DEPARTMENT & ENGINEER'S APPROVAL PRIOR TO INSTALLATION.
8. SHUT-OFF VALVES TO BE RESILIENT WEDGE TYPE O.S. & Y.
9. MUST ALSO MEET THE REQUIREMENTS OF THE FIRE DEPARTMENT.
10. TO BE USED ONLY ON SPECIFIC APPROVAL OF THE FIRE DEPARTMENT.
11. SHOULD NOT BE USED WHERE THERE ARE YARD HYDRANTS AND WHERE ADEQUATE FIRE FLOWS CANNOT BE OBTAINED.
12. DOUBLE DETECTOR CHECK SHALL BE THE SAME SIZE AS THE FIRE LINE. (EXCEPT WHEN A 12" FIRE LINE IS REQUIRED, THEN A 10" DOUBLE DETECTOR CHECK BACKFLOW ASSEMBLY IS REQUIRED.

CITY OF SEBASTOPOL · CALIFORNIA · PUBLIC WORKS

DOUBLE DETECTOR CHECK VALVE SINGLE SERVICE

SCALE: NONE | DRAWN: MGA | CHK: SAL | APPVD: PHK | DATE: JULY 1998

STD. NO. W-7.2