Agenda Item Number: 3

Agenda Report Reviewed by:
City Manager:

**CITY OF SEBASTOPOL**
**CITY COUNCIL**
**STAFF REPORT**

| | |
|---|---|
| Meeting Date: | September 6, 2016 |
| To: | Honorable Mayor and Honorable City Councilmembers |
| From: | Henry Mikus, Engineering Manager |
| Subject: | Authorization to Solicit Bids |
| | Contract No. 2016-07 - ADA Transition Program for the Ives Pool Facility: |
| | Construction Bids |
| Recommendation: | Adopt Minute Order authorizing staff to advertise for bids. |
| Funding: | Currently Budgeted: __X__ Yes _____ No ____ N/A |
| | Net General Fund Cost: $ _____none_____ |
| | Estimated $240,000 cost to the City is funded by annual Community Development Block Grants (CDBG) (beginning 2011 and accumulated) |

**INTRODUCTION**: This item is to request the City Council authorize staff to solicit bids for construction/installation of federally mandated American Disabilities Act (ADA) improvements at the Ives Pool Facility. In addition, because of great efficiencies in avoiding disruption to pool activities plus construction cost savings, the women's bathhouse will be expanded.

**BACKGROUND:**

The City has planned upgrades to its facilities to comply with federal ADA statutes. City facilities were assessed, with a list for each developed showing the required actions to achieve ADA compliance. The City Council directed that the Ives Pool Facility would be the first City building to be addressed.

The Ives ADA work consists of providing an ADA compliant "path of travel" from ADA parking in the Veterans' Building lot to the Ives Pool entry. At the pool, the bath house is the focus, as both the men's and women's shower and bathrooms require ADA improvements. Other items include enhancing the access at gates, and providing railings, level surfaces, upgrades to water fountains, and other such ADA improvements as delineated in the plans.

The expansion work involves adding 225 square feet of space to the women's bathroom and showers as part of the Ives Pool bathhouse. The Ives Pool Board had delegating this project to a committee which met regularly with the architect, pool staff, and city staff developing details.

The bathrooms outside the pool boundary that serve the park will be done separately.

**DISCUSSION:**

Via past and current Capital Improvement Plans (CIP) the City Council approved allocation of funds, which have accumulated beginning 2011 via grant monies from CDBG (current available balance $240,702). In October 2015 the City entered into an agreement with local resident and specialist ADA Architect Craig Williams to prepare the design. The design is nearly complete, and the project ready to go to bid for construction.

The Ives Pool Board has long considered expanding the women's bathhouse section to better accommodate the numbers of lady visitors. During discussions with pool management it became evident that doing the ADA upgrades plus the bathroom expansion together would very likely result in savings for both the City and the Pool. Two separate budgets for each distinct portion of the work, either ADA or expansion, have been formulated. The design plans and bid package have been structured to keep the financial arrangements for either portion separate. This provides for clear accountability, and allows the projects to be separated if need with minimum problems. The Ives Pool has committed $150,000 to cover the expansion work, which is felt to be sufficient. It is not intended to use any City or grant money to pay for the expansion work.

The total cost estimate for the project is $390,000. $240,000 is the ADA portion and $150,000 is the expansion.

The project will be advertised for approximately 30 days, after which the sealed bids will be opened. Staff will then return to Council with a recommendation for award of contract.

The project design drawings and the project specifications package that are attached for Council review are substantially complete; comments made upon review of the project documents by City staff are still being addressed and will not be complete until the project is released for bid. However, the revisions are strictly technical and do not materially change the project as presented. Given the tight time line for the project presenting the plans now is the best pathway to move the project forward.

**RECOMMENDATION**: That the City Council adopt a Minute order to authorize staff to solicit bids for construction/installation of ADA improvements at the Ives Pool Facility.

**Attachment(s):**

Half-size set of preliminary design plans
Bid specifications

# INVITATION FOR BIDS

CONTAINING
NOTICE TO BIDDERS
INFORMATION FOR BIDDERS
SPECIAL PROVISIONS
PROPOSAL AND CONTRACT FORMS

FOR CONSTRUCTION OF

## Ives Park and Pool ADA Transition and Expansion

Contract No. **2016-07**

IN THE
CITY OF SEBASTOPOL

**BID OPENING DATE**

**October 6, 2016**
**3:00 p.m.**

ISSUED BY

ENGINEERING DIVISION
CITY OF SEBASTOPOL
714 Johnson Street
Sebastopol, CA 95472
(707) 823-2151

Henry Mikus, Engineering Manager

CITY OF SEBASTOPOL
CONTRACT DOCUMENTS AND SPECIFICATIONS

## TABLE OF CONTENTS

NOTICE TO BIDDERS

PART I
BIDDING AND CONTRACT DOCUMENTS

PART II
GENERAL CONDITIONS

PART III
SPECIAL PROVISIONS

PART IV
SPECIFICATIONS

APPENDICES

| Appendix | Description |
|---|---|
| A | General Guidelines for Construction Activities Erosion and Sediment Control and Minimization of Hazardous Materials Contact with Stormwater |

# NOTICE TO BIDDERS

Sealed proposals will be received by the Engineering Manager, Engineering Division, 714 Johnson Street, Sebastopol, California 95472, up to the hour of **3:00 p.m. on Thursday, October 6, 2016** for:

**Ives Park and Pool ADA Transition and Expansion**
**Contract 2016-07**

In accordance with the applicable provisions of the Labor Code, the Director of Industrial Relations, State of California has determined the general prevailing wage rates. Copies of those rates are on file with the City Engineer.

Plans and specifications may be examined at the office of the Sebastopol Public Works Department, 714 Johnson Street, Sebastopol, California 95472, and may be obtained upon payment of Twenty Dollars ($20.00). There will be no refund for plans and specifications. Bidders must possess a valid **Class B** license in accordance with the provisions of the State Contractor's License Act. Questions regarding the project plans, and specifications, or other contract provisions, bonding, and insurance shall be addressed to the City Engineer, Joseph Gaffney at (707) 823-2151.

**Proposals for the job must be submitted on the proposal forms included in these specifications without removal therefrom.** Proposals shall be enclosed in an envelope marked:

**Ives Park and Pool ADA Transition and Expansion**
**Contract 2016-07**

Each proposal must be accompanied by cash, or an unconditional certified bid bond or check made payable to the City of Sebastopol, and such cash, check, or bond shall be in an amount equal to at least ten percent (10%) of the amount of the bid.

Notice is hereby given that for any moneys earned by the contractor and withheld by the City to ensure performance of the contract, the contractor may, at his request and expense, substitute securities equivalent to the amount withheld in the form and manner and subject to the conditions provided in Chapter 13 (commencing with Section 4590), Division 5, Title 1 of the Government Code of the State of California.

The City Council of the City of Sebastopol reserves the right to reject any and all bids and to waive any informality in any bid received. The award of the contract, if it were awarded, will be to the lowest responsible bidder whose proposal complies with all the requirements prescribed.

By order of the City Council of the City of Sebastopol, Sonoma County, California.

CITY OF SEBASTOPOL

_____

Joseph Gaffney, City Engineer

## PART I

## INFORMATION FOR BIDDERS


| SECTION | TITLE | PAGE |
|---|---|---|
| 1 | Receipt and Opening of Bids | I - 1 |
| 2 | Preparation of Bid | I - 1 |
| 3 | Subcontractors | I - 1 |
| 4 | Site Visit | I - 1 |
| 5 | Telegraphic Modifications | I - 1 |
| 6 | Qualification of Bidder | I - 2 |
| 7 | Bid Security | I - 2 |
| 8 | Liquidated Damages for Failure to Enter Into Contract | I - 2 |
| 9 | Time of Completion and Liquidated Damages | I - 2 |
| 10 | Conditions of Work | I - 2 |
| 11 | Addenda and Interpretations | I - 2 |
| 12 | Security for Faithful Performance | I - 3 |
| 13 | Power of Attorney | I - 3 |
| 14 | Laws and Regulations | I - 3 |
| 15 | Method of Award - Lowest Qualified Bidder | I - 3 |
| 16 | Obligation of Bidder | I - 3 |
| 17 | Workmen's Compensation Insurance | I - 3 |
| 18 | Wage Scale | I - 4 |
| 19 | Hours of Labor | I - 4 |
| 20 | Apprentices | I - 4 |
| 21 | Labor Discrimination | I - 4 |
| 22 | City Water | I - 4 |
| 23 | Safety Standards and Accident Prevention | I - 5 |

## BID DOCUMENTS, CONTRACT DOCUMENTS AND INSURANCE REQUIREMENTS


| | |
|---|---|
| BIDDER'S PROPOSAL | I - 6 |
| BIDDER'S SHEET | I - 7 |
| STATEMENT OF EXPERIENCE OF BIDDER | I - 11 |
| LIST OF SUBCONTRACTORS | I - 12 |
| BID BOND | I - 13 |
| NON-COLLUSION AFFIDAVIT | I - 14 |
| CONTRACT | I - 15 |
| 100% PERFORMANCE BOND | I - 17 |
| 50% PAYMENT BOND | I - 19 |
| INSURANCE REQUIREMENTS FOR CONTRACTORS | I - 20 |

# INFORMATION FOR BIDDERS

**Section 1 Receipt and Opening of Bids:**

The City of Sebastopol (herein called the Owner) invites bids on the form attached hereto, all blanks of which must be appropriately filled in. Bids will be received by the Owner at the office of the Engineering Manager until **3:00 p.m. on October 6, 2016**, and then at said office publicly opened and read aloud. The envelopes containing the bids must be sealed, addressed to the Engineering Manager, Engineering Division, 714 Johnson Street, Sebastopol, California, 95472, and designated as bid for:

**Ives Park and Pool ADA Transition and Expansion**
**Contract 2016-07**

The Owner may find any bid not prepared and submitted in accordance with the provisions hereof non-responsive and may waive any informality or reject any and all bids. Any bid may be withdrawn before the postponement thereof. Any bid received after the time and date specified shall not be considered. No bidder may withdraw within 30 days after the actual date of the opening thereof.

**Section 2 Preparation of Bid:**

**BIDS SHALL BE SUBMITTED ON THE FORMS PROVIDED IN THIS DOCUMENT WITHOUT REMOVAL THEREIN.**

All blank spaces for bid prices must be filled in, in ink or typewriter, and the foregoing Certification must be fully completed and executed when submitted.

Each bid must be submitted in a sealed envelope bearing on the outside the name of the bidder, his address, and the name of the project for which the bid is submitted. If forwarded by mail, the sealed envelope containing the bid must be enclosed in another envelope addressed as specified in the bid form.

**Section3 Subcontractors:**

The bidder is specifically advised that any person, firm, or other party to whom it is proposed to award a subcontract under this contract must be acceptable to the Owner.

**Section 4 Site Visit**

Prospective bidders are strongly encouraged to visit the job site prior to the bidding date. Contact the Sebastopol Engineering Division at 707-823-2151 for directions.

**Section 5 Telegraphic Modifications:**

Any bidder may modify his bid by telegraphic communication at anytime prior to the scheduled closing time for receipt of bids, provided such telegraphic communication is received by the Owner prior to the closing time, and provided further, the Owner is satisfied that a written confirmation of the telegraphic modification over the signature of the bidder was mailed prior to the closing time. The telegraphic communication should not reveal the bid price but should provide the addition or subtraction or other modification so that the final prices or terms will not be known by the Owner until the sealed bid is opened. If written confirmation is not received within two days from the closing time, no consideration will be given to the telegraphic modification.

**Section 6 Qualification of Bidder:**

The Owner may make such investigation as he deems necessary to determine the ability of the bidder to perform the work, and the bidder shall furnish to the Owner all such information and data for this purpose as the Owner may request. The Owner reserves the right to reject any bid if the evidence is submitted by, or investigation of, such bidder fails to satisfy the Owner that such bidder is properly qualified to carry out the obligations of the contract and to complete the work contemplated therein. Conditional bids will not be accepted. Bidder must possess a valid Class B Contractor's License.

No contractor or subcontractor may be listed on a bid proposal for a public works project unless registered with the Department of Industrial Relations pursuant to Labor Code Section 1725.5 [with limited exceptions from this requirement for bid purposes only under Labor Code Section 1771.1(a)].

No contractor or subcontractor may be awarded a contract for public works on a public works project unless registered with the Department of Industrial Relations pursuant to Labor Code Section 1725.5.

**Section 7 Bid Security:**

Each bid must be accompanied by cash, certified check of the bidder, or a bid bond prepared on the form of a bid bond attached thereto, duly executed by the bidder as principal and having as surety thereon a surety company approved by the Owner, in the amount of 10% of the bid. Such cash, checks or bid bonds will be returned to all except the three lowest bidders within three days after the opening of bids, and the remaining cash, checks or bid bonds will be returned promptly after the Owner and the accepted bidder have executed the contract, or, if no award has been made within 30 days after the date of the opening of the bids, upon demand of the bidder at any time thereafter, so long as he has not been notified of the acceptance of his bid.

**Section 8 Liquidated Damages for Failure to Enter into Contract:**

The successful bidder, upon his failure or refusal to execute and deliver the contract, bonds, and Insurance Certificates, required within 10 days after he has received notice of the acceptance of his bid, shall forfeit to the Owner, as liquidated damages for such failure or refusal, the security deposited with his bid. Please refer to proposed schedule of work contained in Special Provisions, Section 6.

**Section 9 Time of Completion and Liquidated Damages:**

Bidder must agree to commence work on or before a date to be specified in written "Notice to Proceed" of the Owner and to fully complete the project within.

**Sixty-five (65) working days**

thereafter. Bidder must also agree to pay as liquidated damages, the sum of $500.00 for each consecutive working day thereafter as hereinafter provided in the General Conditions. Please refer to proposed schedule of work contained in Special Provisions, Section 6.

**Section 10 Conditions of Work:**

Each bidder must inform himself fully of the conditions relating to the construction of the project and the employment of labor thereon. Failure to do so will not relieve a successful bidder of his obligation to furnish all material and labor necessary to carry out the provisions of his contract. Insofar as possible, the

contractor, in carrying out his work, must employ, such methods or means as will not cause any interruption of or interference with the work of any contractor.

**Section 11 Addenda and Interpretation:**

No oral interpretation of the meaning of the plans, specifications or other pre-bid documents will be made to any bidder.

Every request for such interpretation should be in writing addressed to Sebastopol Engineering Division, 714 Johnson Street, Sebastopol, California 95472, and to be given consideration must be received at least five working days prior to the date fixed for opening of bids. Any and all such interpretations and any supplemental instructions will be in the form of a written addendum to the specifications which, if issued, will be mailed by certified mail with return receipt requested to all prospective bidders (at the respective addresses furnished for such purposes), and not later than three days prior to the date fixed for opening bids. Failure of any bidder to receive any such addendum or interpretations shall not relieve such bidder from any obligation under his bid as submitted. All addenda so issued shall become part of the contract documents.

**Section 12 Security for Faithful Performance:**

Simultaneously with his delivery of the executed contract, the Contractor shall furnish a surety bond as security for faithful performance of this contract and for the payment of all persons performing labor on the project under this contract and furnishing materials in connection with this contract, as specified in the General Conditions included herein. The surety on such bond or bonds shall be a duly authorized surety company satisfactory to the Owner.

**Section 13 Power of Attorney:**

Attorneys-in-fact who sign bid bonds or contract bonds must file with each bond a certified and effectively dated copy of their power of attorney.

**Section 14 Laws and Regulations:**

The Bidder's attention is directed to the fact that all applicable Federal Laws and Standards, State Laws and Standards, Municipal Ordinances and the rules and regulations of all authorities having jurisdiction over construction of the project shall apply to the contract throughout, and they will be deemed to be included in the contract the same as though herein written out in full. Reference is made to the Provisions of the Contract contained in these specifications where applicable Federal and State Laws are specified.

**The work of this project is further subject to and the Contractor shall construct the work in strict conformance with the 2010 Americans with Disabilities Act Standards for Accessible Design and the 2013 California Building Code (Title 24) as amended, whichever is more stringent. Nothing in the approved Contract Documents is intended to deviate from any applicable standard nor relieve the Contractor from its obligation to construct the work in full compliance with these standards.**

This contract is subject to compliance monitoring and enforcement by the Department of Industrial Relations.

**Section 15 Method of Award - Lowest Qualified Bidder:**

If at the time this contract is to be awarded, the lowest bid submitted by a responsible bidder does not exceed the amount of funds estimated by the Owner to be available to finance the contract, the contract will be awarded.

**Section 16 Obligation of Bidder:**

At the time of the opening of bids each bidder will be presumed to have inspected the site and to have read and be thoroughly familiar with the plans and contract documents (including all addenda). The failure or omission of any bidder to examine any form, instrument or documents shall in no way relieve any bidder from any obligation in respect of his bid.

**Section 17 Workmen's Compensation:**

The Contractor shall maintain adequate workmen's compensation insurance under the laws of the State of California for all labor employed by him or by any subcontractor under him who may come within the protection of such workmen's compensation laws of the State of California, and shall provide, where practicable, employers' general liability insurance for the benefit of his employees and the employees of any subcontractor under him not protected by such compensation laws, and proof of such insurance satisfactory to the Governing Body shall be given by filing certificates of such insurance with the Engineer of work in form satisfactory to the Governing Body. If such insurance is underwritten by any agency other than the State Compensation Fund, such agency shall be a company authorized to do business in the State of California.

**Section 18 Wage Scale:**

Pursuant to Section 1773 of the Labor Code of the State of California, the City has obtained from the Directory of the Department of Industrial Relations the general prevailing rate of per diem wages and the general prevailing rate for holidays and overtime work for each craft, classification, or type of workman required to execute the contract. A copy of said prevailing rate of per diem wages is on file in the office of the Engineering Manager to which reference is hereby made for further particulars. Said prevailing rate of per diem wages will be made available to any interested party upon request, and a copy thereof shall be posted at the job site. The provisions of Article 2, Chapter 1, Part 7, Division 2 (commencing with Section 1770) of the Labor Code and particularly Section 1775 thereof, shall be complied with.

**Section 19 Hours of Labor:**

The Contractor shall forfeit, as penalty to the City, one hundred twenty-five dollars ($125.00) for each workman employed in the execution of the contract by him or by any subcontractor, for each calendar day during which any workman is required or permitted to labor more than eight (8) hours in any one calendar day and forty (40) hours in any one calendar week, in violation of the provisions of Article 3, Chapter 1, Part 7, Division 2 (commencing with Section 1810) of the Labor Code of the State of California.

**Section 20 Apprentices:**

In accordance with the provisions of Section 1777.5 of the Labor Code, and in accordance with the rules and procedures of the California Apprenticeship Council, properly indentured apprentices shall be employed in the prosecution of the work. The ratio of apprentices to journeymen who shall be employed in the respective crafts or trades may be the ratio stipulated in the apprenticeship standards under which the appropriate joint apprenticeship committee operates. Willful failure by the contractor to comply with said Section 1777.5 shall result in his being denied the right to bid on a public works contract for a period of six months from the date determination is made.

Information relative to number of apprentices, indemnification, wages, hours of employment and standards of working conditions shall be obtained from the Director of the Department of Industrial Relations, who is the Administrative Officer of the California Apprenticeship Council.

**Section 21 Labor Discrimination:**

Attention is directed to Section 1735 of the Labor Code, which reads as follows:

"No discrimination shall be made in the employment of persons upon public works because of the race, religious, creed, color, national origin or ancestry, physical handicap, medical condition, marital status, or sex of such persons, except as provided in Section 12940 of the Government Code. Any contractor for public works violating this section is subject to all penalties imposed for a violation of this chapter."

**Section 22 City Water:**

Contractors may obtain water from a filler line located at the City Corporation Yard, 714 Johnson Street, or from an alternate source approved by the Public Works Superintendent prior to the start of construction. Contact the Sebastopol Public Works Department for information. Unauthorized use of City hydrants or water outlets is not allowed and will result in legal proceedings by the City of Sebastopol.

**Section 23 Safety Standards and Accident Prevention:**

With respect to all work performed under this contract, the Contractor shall:

1. Comply with the safety standard provisions of all applicable laws, building and construction codes in the "Manual of Accident Prevention in Construction" latest edition, as published by the Associated General Contractors of America; the requirements of the Occupational Safety and Health Act of 1970 (Public Law 91-596; 29 U.S.C. §651 et seq. (1970), Title 8 of the California Code of Regulations, and the requirements of Title 29 of the Code of Federal Regulations, Section 1518 as published in the "Federal Register," Volume 36, No. 75, Saturday, April 17, 1971

2. Exercise every precaution at all times for the prevention of accidents and the protection of persons (including employees and the public) and property.

3. Maintain at his field office or other well known place at the job site, all articles necessary for giving first aid to the injured, and shall make standing arrangements for the immediate removal to a hospital or a doctor's care of persons (including the public and employees), who may be injured on or adjacent to the job site. In no case shall employees be permitted to work at a job site before

the employer has made a standing arrangement for removal of injured persons to a hospital or a doctor's care.

**BIDDER'S PROPOSAL**

**(DO NOT DETACH)**

**Ives Park and Pool ADA Transition and Expansion**
**Contract 2016-07**

To the Honorable City Council
City of Sebastopol
Sebastopol, California

Honorable members of the Council:

The undersigned, as a bidder, declares he/she has carefully and thoroughly examined the location and environs of the proposed work and that he/she has carefully and thoroughly examined all the plans and specifications, including but not necessarily limited to, all approved construction document revisions along with all applicable local, state and federals laws, regulations, standards, codes and ordinances which are incorporated by reference, and hereby proposes to furnish all materials and to do all work required to orderly and in a workmanlike manner consistent with industry practice at the highest standards of care complete the Work in accordance with the plans and specifications and construct the Work in conformance with all applicable local, state and federals laws, regulations, standards, codes and ordinances. Bidder hereby agrees to commence work under this contract on or before a date specified in written "Notice to Proceed" of the Owner, and to complete the work within Sixty-five (65) working days as stipulated in the specifications, or agree to the assessment of liquidated damages, and to accept payment in full for the work at the prices as set forth on the attached Bidder's sheets.

Licensed in accordance with an act providing for the registration of Contractor's License No. B.

(If an individual, so state. If a firm or co-partnership, state the firm name and give the names of all individual co-partners comprising the firm. If a corporation, state legal name of corporation and also name of President, Secretary, Treasurer and manager thereof and the name of the qualifying licensee).

_____

_____

_____

_____

_____

_____

_____

_____

DATED:_____, 20___

Explanation of Bid Components A & B: The project consists of two separate yet related components: Component A, the ADA Upgrades, and Component B, the Women's Bath House Expansion. It is essential the two components are financially tracked and invoiced for separately. The City is providing funding for the ADA work, while the Ives Pool Board is providing funding for the expansion.

**BIDDER'S SHEETS**

| **BASE BID COMPONENT A: ADA Upgrades** | | | | | |
|---|---|---|---|---|---|
| **BID ITEM NO.** | **DESCRIPTION** | **ESTIMATED QUANTITY** | **UNIT OF MEASURE** | **UNIT PRICE** | **PRICE** |
| 1 | New asphalt concrete accessible pedestrian path of travel extending from High Street to the Ives Pool House | 1 | Lump Sum | | |
| 2 | New Hi-low accessible drinking fountain; remove existing & replace with new | 2 | EA | | |
| 3 | New accessible concrete landing and replacement of threshold, provision of kick plates at main public entry door serving lobby | 1 | EA | | |
| 4 | New accessible concrete landings and replacement of exterior doors, frames and all associated hardware at entries leading from pool area to shower / dressing rooms | 1 | Lump Sum | | |
| 5 | Replacement of interior doors, frames all associated hardware at entries leading from lobby area to shower / dressing room | 1 | Lump Sum | | |
| 6 | Replacement of existing shower column and hook-ups with a new shower column and hook-ups at men's shower room | 1 | EA | | |
| 7 | Provision of accessible handrails and warning stripes at existing stairs leading from Willow Ave. to Ives Pool House. | 1 | Lump Sum | | |
| 8 | Van accessible parking and access aisle at the Sebastopol Center for the Arts along with associated pavement markings and signs | 1 | Lump Sum | | |
| 9 | Provision of a new wheelchair accessible shower compartment at men's and women's showers with associated plumbing and accessible accessories | 2 | EA | | |
| 10 | Replacement of existing toilet fixtures, reconfiguration of plumbing fixtures and provision of new accessible toilet and lavatory fixtures and new toilet compartments at men's and women's dressing rooms along with accessible accessories | 1 | Lump Sum | | |

| | | | | | |
|---|---|---|---|---|---|
| 11 | Provision of miscellaneous toilet room and shower room accessories | 1 | Lump Sum | | |
| 12 | Provision of miscellaneous signage | 1 | Lump Sum | | |
| | | | | | |
| **TOTAL BASE BID Component A: ADA Upgrades =** | | | | | |

| **BASE BID COMPONENT B: Bath House Expansion** | | | | | |
|---|---|---|---|---|---|
| **BID ITEM NO.** | **DESCRIPTION** | **ESTIMATED QUANTITY** | **UNIT OF MEASURE** | **UNIT PRICE** | **PRICE** |
| 1 | Women's shower room building addition and all associated scope of work per Section 4 | 1 | Lump Sum | | |
| 2 | | | | | |
| 3 | | | | | |
| | | | | | |
| | | | | | |
| | | | | | |
| | | | | | |
| **TOTAL BASE BID Component B: Bath House Expansion =** | | | | | |

| ADD ALTERNATE - COMPONENT A | | | | | |
|---|---|---|---|---|---|
| **BID ITEM NO.** | **DESCRIPTION** | **ESTIMATED QUANTITY** | **UNIT OF MEASURE** | **UNIT PRICE** | **PRICE** |
| 1 | South East corner of pool deck area: Provision of an accessible pedestrian gate, associated hardware and signage and an AC paved landing (Ives Park side of added pedestrian gate) | 1 | Lump Sum | | |
| 2 | South East corner of pool deck area: Provision of an asphalt paved van accessible parking space along with associated pavement markings and signs adjacent and connected to item Add Alternated Component A Item No. 1 | 1 | Lump Sum | | |
| 3 | | | | | |
| 4 | | | | | |
| 5 | | | | | |
| 6 | | | | | |
| 7 | | | | | |
| 8 | | | | | |
| 9 | | | | | |
| 10 | | | | | |
| **TOTAL ADD ALTERNATE =** | | | | | |

| **BIDDER'S SHEET SUMMARY*** | |
|---|---|
| BID SHEET | PRICE ($) |
| BASE BID Component A | |
| BASE BID Component B | |
| ADDITIVE ALTERNATE | |

*Contract will be awarded based on base bid.

Above unit prices shall include all costs for performing the entire contract as shown on the plans and included in these specifications and shall include but not be limited to all labor, materials, tools, equipment, mobilization, tree preservation, profit, overhead, insurance, bonds, and the like required to finish the various items of work.

Bidder understands that the Owner reserves the right to reject any or all bids and to waive any informality in the bidding.

The bidder agrees that this bid shall be good and may not be withdrawn for a period of 30 calendar days after the scheduled closing time for receiving bids.

Upon receipt of written notice of the acceptance of this bid, bidder will execute the formal contract attached within 10 days and deliver a Surety Bond or Bonds as required by the section of the General Conditions entitled "Contract Security." The bid security attached in the sum of _____ ($ _____), is to become the property of the Owner in the event the contract and bond are not executed within the time and additional expense to the Owner caused thereby.

Respectfully Submitted,

_____
Signature

_____
Print Name

_____
Title

_____
Address

_____
City, State, Zip Code

SEAL - (If Bid by a Corporation)

**STATEMENT OF EXPERIENCE OF BIDDER**
**TO BE COMPLETED BY BIDDER AND**
**SUBMITTED WITH THE BID**

The bidder has been engaged in the contracting business, under the present business name, for ___ years. Experience in work of a nature similar to that bid in this Proposal extends over a period of _____ years.

The bidder is required to state below work of similar magnitude or character that he has done, and to give references that will enable the Governing Body to judge his experience, skill, and business standing, and his ability to conduct the work completely and as required under the terms of the Contract.

| **Year, Location, Magnitude and Type of Work** | **Owner / Contact Person and Phone Number** |
|---|---|
| | |
| | |
| | |
| | |
| | |
| | |
| | |
| | |

Bank References:_____

_____

_____

_____

_____

Contractor's License No:_____ Signature of Bidder:_____
State of California

**Attach other sheets as necessary.**

## LIST OF SUBCONTRACTORS
## TO BE COMPLETED BY BIDDER AND
## SUBMITTED WITH THE BID

In accordance with the provisions of Sections 4104 and 4111, inclusive, of the Government Code of the State of California, each bidder shall list below the name and location of place of business of each subcontractor who will perform a portion of the contract work in an amount in excess of one-half of one percent of the total contract price. In each such instance, the nature and extent of the work to be subcontracted shall be described.

The General Contractor to whom the contract is awarded will not be permitted without written consent of the City, to substitute any person as subcontractor in place of the subcontractor designated in the original bid, or to permit any subcontract to be assigned or transferred, or to allow it to be performed by anyone other than the original subcontractor. If the original subcontractor, after having reasonable opportunity to do so, shall fail or refuse to execute the written contract presented to him by the General Contractor, the owner shall be notified and a replacement agreed upon.

The failure of the Contractor to specify a subcontractor for any portion of the contract work in excess of one-half of one percent of the total contract price shall be deemed to indicate that the Contractor intends to perform such portion himself. The subcontracting of work for which no subcontractor was designated in the original bid and which is in excess of one-half of one percent of the total contract price, will be allowed only with the written consent of the City.

| Subcontractor Name | Contractors License # | D.I.R. # | Address of Office, Mill or Shop | Description of Work To Be Performed | % of Total Bid |
|---|---|---|---|---|---|
| | | | | | |
| | | | | | |
| | | | | | |
| | | | | | |
| | | | | | |
| | | | | | |
| | | | | | |

**NOTE: All subcontractors must provide insurance certificates and endorsements in accordance with "Insurance Requirements For Contractors" contained in this document.**

## BID BOND
## TO BE EXECUTED BY THE BIDDER AND SUBMITTED WITH THE BID

**KNOW ALL MEN BY THESE PRESENTS**, that we, the undersigned, _____ _____as Principal, and _____ as Surety, are hereby held and firmly bound unto the CITY OF SEBASTOPOL, as owner in the penal sum of $ _____ for the payment of which, well and truly to be made, we hereby jointly and severally bind ourselves, our heirs, executors, administrators, successors and assigns.

Signed this_____ day of, _____ 20___.

The condition of the above obligation is such that whereas the Principal has submitted to the CITY OF SEBASTOPOL a certain Bid, attached hereto and hereby made a part hereof to enter in a contract in writing for the

**Ives Park and Pool ADA Transition and Expansion**
**Contract 2016-07**

**NOW, THEREFORE,**

(a) If said Bid shall be rejected, or in the alternate,

(b) If said Bid shall be accepted and the Principal shall execute and deliver a contract in the Form of Contract attached hereto (properly completed in accordance with said Bid) and shall furnish a bond for his faithful performance of said contract, and for the payment of all persons performing labor or furnishing materials in connection therewith, and shall in all other respects perform the agreement created by the acceptance of said Bid, then this obligation shall be void, otherwise the same shall remain in force and effect; it being expressly understood and agreed that the liability of the Surety for any and all claims hereunder, in no event, exceed the penal amount of this obligation as herein stated. The Surety for value received, hereby stipulated and agrees that the obligations of said surety and its bond shall be in no way impaired or affected by any extension of the time within which the Owner may accept such Bid; and said Surety does hereby waive notice of any such extension.

**IN WITNESS WHEREOF**, the Principal and the Surety have hereunto set their hands and seals, and such of them are corporations have caused their corporate seals to be hereto affixed and these presents to be signed by their proper officers, the day and year first set forth above.

_____
Principal

_____
Surety

SEAL BY:_____

**NONCOLLUSION AFFIDAVIT**
**TO BE EXECUTED BY BIDDER AND**
**SUBMITTED WITH BID**

State of California )
) ss.
County of _____ )

_____

Being first duly sworn, deposes and says that he or she is _____ of _____ the party making the foregoing bid that the bid is not made in the interest of, or on behalf of, any undisclosed person, partnership, company, association, organization, or corporation; that the bid is genuine and not collusive or sham; that the bidder has not directly or indirectly induced or solicited any other bidder to put in a false or sham bid, and has not directly or indirectly colluded, conspired, connived, or agreed with any bidder or anyone else to put in a sham bid, or that anyone shall refrain from bidding; that the bidder has not in any manner, directly or indirectly, sought by agreement, communication, or conference with anyone to fix the bid price of the bidder or any other bidder, or to fix any overhead, profit, or cost element of the bid price, or of that of any other bidder, or to secure any advantage against the public body awarding the contract of anyone interested in the proposed contract; that all statements contained in the bid are true; and, further, that the bidder has not, directly or indirectly, submitted his or her bid price or any breakdown thereof, of the contents thereof, or divulged information or data relative thereto, or paid, and will not pay, any fee to any corporation, partnership, company association, organization, bid depository, or to any member or agent thereof to effectuate a collusive or sham bid.

_____
Principal

## CONTRACT

**THIS AGREEMENT**, made this _____ day of _____, 20____, by and between CITY OF SEBASTOPOL, herein called "owner," acting herein through its CITY MANAGER and

_____

_____

_____

STRIKE OUT INAPPLICABLE TERMS (A Corporation) (A Partnership) (An Individual doing business as _____)

of _____, County of _____, State of_____, hereinafter called "Contractor."

**WITNESSETH:** That for and in consideration of the payment and agreement hereinafter mentioned, to be made and performed by the OWNER, the CONTRACTOR hereby agrees with the OWNER to commence and complete the construction described as follows:

**Ives Park and Pool ADA Transition and Expansion**
**Contract 2016-07**

hereinafter called the project, for the sum of_____Dollars ($_____) and all extra work in connection therewith, under the terms as stated in the General Conditions and Special Provisions of the Contract; and at his (its or their) own proper cost and expense to furnish all the materials, supplies, machinery, equipment, tools, superintendence, labor, insurance, and other accessories and services necessary to complete the said project in accordance with the conditions and prices stated in Notice to Bidders, Bidders Proposal, the General Conditions, and Special Provisions of the Contract, the plans, which include all maps, plats, blue prints, and other drawings or written explanation matter thereof, the specifications and contract documents therefor as prepared by the City of Sebastopol Public Works Department, herein entitled the Engineer all of which are made a part hereof and collectively evidence and constitute the contract.

The Contractor hereby agrees to commence work under this contract on or before a date to be specified in a written "Notice to Proceed" of the Owner, and to fully complete the project within Thirty-five (35) working days. The Contractor further agrees to pay, as liquidated damages, the sum of $1,500.00 for each consecutive working day thereafter as provided in Section 9 of the Information to Bidders.

The Owner agrees to pay the Contractor in current funds for the performance of the Contract, subject to additions and deductions, as provided in the General Conditions of the contract, and to make payments on account thereof as provided in Part II, Section 20, "Payments to Contractor" of the General Conditions.

**IN WITNESS WHEREOF, the parties to these presents have executed this contract in three (3) counterparts, each of which shall be deemed an original, in the year and day above mentioned.**

CITY OF SEBASTOPOL
(Owner)

**SEAL**

**Attest:**

BY:_____

(City Clerk)

(City Manager)

(Contractor)

**SEAL**

BY:_____

(Secretary)

(Title)

(Witness)

NOTE: Secretary of the Owner should attest. If Contractor is a corporation, Secretary should attest.

**100%**
**PERFORMANCE BOND**

**KNOW ALL MEN BY THESE PRESENTS:** That we (1)_____ _____ a (2)_____hereinafter called "Principal" and (3) _____ of _____ State of _____ _____ hereinafter called "Surety", are held and firmly bound into (4) CITY OF SEBASTOPOL of SEBASTOPOL, CALIFORNIA hereinafter called "Owner", in the penal sum of _____ Dollars ($_____) in lawful money of the United States, for the payment of which sum well and truly to be made, we bind ourselves, our heirs, executors, administrators and successors, jointly and severally, firmly by these presents.

**THE CONDITION OF THIS OBLIGATION** is such that Whereas, the Principal entered into a certain contract with the Owner dated the _____ day of _____, 20 ___ , a copy of which is hereto attached and made a part hereof for the construction of:

**Ives Park and Pool ADA Transition and Expansion**
**Contract 2016-07**

**NOW, THEREFORE**, if the principal shall well, truly and faithfully perform its duties, all the undertakings, covenants, terms, conditions and agreements of said contract during the original term thereof, and any extensions thereof which may be granted by the Owner, with or without notice to the Surety, and if he shall satisfy all claims and demands incurred under such contract, and shall fully indemnify and save harmless the Owner from all costs and damages which it may suffer by reason of failure to do so, and shall reimburse and repay the Owner all outlay and expense which the Owner may incur in making good any default, then this obligation shall be void; otherwise to remain in full force and effect.

**PROVIDED, FURTHER**, that the said Surety, for value received hereby stipulates and agrees that no change, extension of time, alteration or addition to the terms of the contract or to the work performed thereunder or the specifications accompanying the same shall in any wise affect its obligation on this bond, and it does hereby waive notice of any such change, extension of time, alteration or addition to the terms of the contract or to the work or to the specifications.

**PROVIDED, FURTHER**, that no final settlement between the Owner and the Contractor shall abridge the right of any beneficiary hereunder, whose claim may be unsatisfied.

**IN WITNESS THEREOF, this instrument is executed in three (3) counterparts, each one of which shall be deemed an original, this the _____, day of _____, 20____.**

**ATTEST:**

_____
(Principal)

_____

By:_____

_____
(Address)

**(SEAL)**

_____
Witness as to Principal

_____
(Address)

_____
(Surety)

**ATTEST:**

By:_____
Attorney-in-Fact

_____
(Surety) Secretary

_____
(Address)

**(SEAL)**

_____
Witness as to Principal

_____
(Address)

NOTE: Date of Bond must not be prior to date of Contract.

(1) Correct Name of Contractor
(2) A Corporation, a Partnership or an Individual, as case may be
(3) Correct Name of Surety
(4) Correct Name of Owner
(5) If Contractor is Partnership, all partners should execute bond.

## 50% PAYMENT BOND

**KNOW ALL MEN BY THESE PRESENTS:** That we _____
(Name of Contractor)
_____ a _____
(Corporation, Partnership or Individual)
_____ hereinafter called "Principal" and _____
(Surety)
_____ of _____ State of _____

hereinafter called "Surety", are held and firmly bound unto the CITY OF SEBASTOPOL, 7120 BODEGA AVENUE, SEBASTOPOL, CALIFORNIA 95472, hereinafter called "Owner", in the penal sum of _____
Dollars ($_____) in lawful money of the United States, for the payment of which sum well and truly to be made, we bind ourselves, our heirs, executors, administrators and successors, jointly and severally, firmly by these presents.

**THE CONDITION OF THIS OBLIGATION** is such that Whereas, the Principal entered into a certain contract with the Owner dated the _____ day of _____, 20___, a copy of which is hereto attached and made a part hereof for the construction of:

**Ives Park and Pool ADA Transition and Expansion**
**Contract 2016-07**

**NOW, THEREFORE,** if the principal shall promptly make payment to all persons, firms, subcontractors, and corporations furnishing materials for or performing labor in the prosecution of the work provided for in such contract, any authorized extension of modification thereof, including all amounts due for materials, lubricants, oil, gasoline, and coal, repairs on machinery, equipment and tools, consumed or used in connection with the construction of such work, and all insurance premiums on said work, and for all labor, performed in such work whether by subcontractor or otherwise then this obligation shall be void; otherwise to remain in full force and effect.

**PROVIDED, FURTHER,** that the said Surety, for value received hereby stipulates and agrees that no change, extension of time, alteration or addition to the terms of the contract or to the work performed thereunder or the specifications accompanying the same shall in any wise affect its obligation on this bond, and it does hereby waive notice of any such change, extension of time, alteration or addition to the terms of the contract or to the work or to the specifications.

**PROVIDED, FURTHER,** that no final settlement between the Owner and the Contractor shall abridge the right of any beneficiary hereunder, whose claim may be unsatisfied.

**IN WITNESS THEREOF,** this instrument is executed in three (3) counterparts, each one of which shall be deemed an original, this the _____ , day of_____ , 20___.

**ATTEST:**

_____
(Principal)

_____

By:_____(S)

_____
(Address)

**(SEAL)**

_____
Witness as to Principal

_____
(Address)

_____
(Surety)

**ATTEST:**

By:_____
Attorney-in-Fact

_____
(Surety) Secretary

_____
(Address)

**(SEAL)**

_____
Witness as to Principal

_____
(Address)

NOTE: Date of Bond must not be prior to date of Contract.
(1) If Contractor is a Partnership, all partners should execute bond.

# CITY OF SEBASTOPOL
# INSURANCE REQUIREMENTS FOR CONTRACTORS

Contractor shall procure and maintain for the duration of the contract insurance against claims for injuries to persons or damages to property which may arise from or in connection with the performance of the work hereunder by the Contractor, his agents, representatives, employees or subcontractors.

Minimum Scope of Insurance
Coverage shall be at least as broad as:

1. Insurance Services Office Commercial General Liability coverage (occurrence form CG0001).
2. Insurance Services Office form number CA 0001 (Ed. 1/87) covering Automobile Liability, code 1 (any auto).
3. Worker's Compensation insurance as required by the State of California and Employer's Liability Insurance. A Waiver of Subrogation endorsement is required on Workers' Compensation Insurance.

Minimum Limits of Insurance
Contractor shall maintain limits no less than:

1. **General Liability**: $2,000,000 per occurrence for bodily injury, personal injury and property damage including operations, products and completed operations, as applicable. If Commercial General Liability Insurance or other form with a general aggregate limit is used, either the general aggregate limit shall apply separately to this project/location or the general aggregate limit shall be twice the required occurrence limit.
2. **Auto Liability**: $1,000,000 per accident for bodily injury and property damage.
3. **Employer's Liability**: $1,000,000 per accident for bodily injury or disease.

Deductibles and Self-Insured Retentions
Any deductibles or self-insured retentions must be disclosed to and approved by the City. At the option of the City, either: the insurer shall reduce or eliminate such deductibles or self-insured retentions as respects the City, its officers, officials, employees and volunteers, or the Contractor shall provide a financial guarantee satisfactory to the City guaranteeing payment of losses and related investigations, claim administration and defense expenses.

Other Insurance Provisions
All required general liability and automobile liability policies are to contain, or be endorsed to contain, the following provisions:

1. The *named additional insured* with respect to this contract shall include the following:

   **The CITY OF SEBASTOPOL, its Officers, Officials, Employees and Volunteers.**

2. The *named additional insured* are to be covered as insureds with respect to liability arising out of automobiles owned, leased, hired or borrowed by or on behalf of the contractor; and with respect to all liability arising out of work or operations performed by or on behalf of the Contractor including materials, parts or equipment furnished in connection with such work or operations. General liability coverage can be provided in the form of an endorsement to the Contractor's insurance, or as a separate owner's policy.

## INSURANCE REQUIREMENTS FOR CONTRACTORS (continued)

3. For any claims related to this project, the Additional Insured coverage under the Contractor's policy shall be "primary and non-contributory" and will not seek contribution from the City of Sebastopol's insurance or self insurance and shall be at least as broad as CG 20 01 04 13.

4. It shall be a requirement under this contract that any available insurance proceeds broader than or in excess of the specified minimum Insurance coverage requirements and/or limits shall be available to the Additional Insured. Furthermore, the requirements for coverage and limits shall be (1) the minimum coverage and limits specified in this Contract; or (2) the broader coverage and maximum limits of coverage of any Insurance policy or proceeds available to the named Insured; whichever is greater.

5. Each insurance policy required by this clause shall be endorsed to state that coverage shall not be cancelled by either party, except after thirty (30) day's prior written notice by certified mail, return receipt requested, has been given to the City of Sebastopol and the County of Sonoma.

Acceptability of Insurers
Insurance is to be placed with insurers with a current A.M. Best's rating of no less than A:VII.

Verification of Coverage
Within ten days of the City's request, the Contractor shall furnish the City with original certificates and amendatory endorsements affecting the coverage required by this clause. The endorsements should be on forms provided by the City or on other than the City's forms or a separate owners policy, provided those forms or policies are approved by the City and amended to conform to the City's requirements. All certificates and endorsements are to be received and approved by the City before the contract is executed. The City reserves the right to require complete, certified copies of all required insurance policies, including endorsements affecting the coverage required by these specifications at any time.

**All certificates and endorsements shall reference the appropriate policy number, names of insured, and shall be signed by an authorized representative of the insurer.**

Subcontractors
Contractor agrees to include with all subcontractors in their subcontract the same requirements and provisions of this agreement including the indemnity and Insurance requirements to the extent they apply to the scope of the Subcontractor's work. Subcontractors hired by Contractor agree to be bound to Contractor and City in the same manner and to the same extent as Contractor is bound to City under the Contract. Subcontractor further agrees to include these same provisions with any Sub-subcontractor. A copy of the contract indemnity and insurance provisions will be furnished to the Subcontractor upon request. The Contractor shall require all sub-contractors to provide a valid certificate of insurance and the required endorsements included in the agreement prior to commencement of any work and contractor will provide proof of compliance to the city.

Subcontractor agrees to be bound to Contractor and City in the same manner and to the same extent as Contractor is bound to City under the contract. Subcontractor further agrees to include the same requirements and provisions of this agreement, including the indemnity and insurance requirements, with any Sub-subcontractor to the extent they apply to the scope of the Sub-subcontractor's work. A copy of the City contract indemnity and insurance provisions will be furnished to the Subcontractor upon request.

## PART II

## GENERAL CONDITIONS


| SECTION | TITLE | PAGE |
|---|---|---|
| 1 | Definitions | II- 1 |
| 2 | Shop or Setting Drawings | II- 1 |
| 3 | Materials, Services and Facilities | II- 1 |
| 4 | Contractor's Title or Materials | II- 1 |
| 5 | Inspection and Testing of Materials | II- 2 |
| 6 | "Or Equal" Clause | II- 2 |
| 7 | Surveys, Permits and Regulations | II- 2 |
| 8 | Contractor's Obligations | II- 2 |
| 9 | Weather Conditions | II- 3 |
| 10 | Protection of Work and Property - Emergency | II- 3 |
| 11 | Reports, Records and Data | II- 3 |
| 12 | Superintendence by Contractor | II- 3 |
| 13 | Changes in Work | II- 3 |
| 14 | Extras | II- 4 |
| 15 | Time for Completion and Liquidated Damages | II- 4 |
| 16 | Correction of Work | II- 5 |
| 17 | Claims for Extra Cost | II- 5 |
| 18 | Right of the Owner to Terminate Contract | II- 5 |
| 19 | Construction Schedule and Periodic Estimates | II- 6 |
| 20 | Payments to Contractor | II- 6 |
| 21 | Acceptance of Final Payment Constitutes Release | II- 7 |
| 22 | Contract Security | II- 7 |
| 23 | Mutual Responsibility of Contractors | II- 7 |
| 24 | Separate Contract | II- 7 |
| 25 | Subcontracting | II- 7 |
| 26 | Engineer's Authority | II- 8 |
| 27 | Use of Premises and Removal of Debris | II- 8 |
| 28 | Quantities of Estimate | II- 8 |
| 29 | Lands and Rights-of-Way | II- 9 |
| 30 | General Guaranty | II- 9 |
| 31 | Insurance Requirements for Contractors | II- 9 |
| 32 | Workmen's Compensation Insurance | II- 9 |
| 33 | Claims and Arbitration | II- 9 |
| 34 | Damage by Storm, Flood, Tidal Wave or Earthquake | II- 11 |
| 35 | Checking of Drawings | II- 11 |
| 36 | As-Built Drawings | II- 11 |
| 37 | Substitute Materials and Equipment | II- 12 |

| | | | |
|---|---|---|---|
| 38 | Defective Material or Work | II- | 12 |
| 39 | Right to Retain Imperfect Work | II- | 12 |
| 40 | Existing Utilities | II- | 12 |
| 41 | Differing Site Conditions | II- | 13 |
| 42 | Project Appearance | II- | 13 |
| 43 | Hazardous Waste in Excavation | II- | 14 |
| 44 | Removal of Asbestos and Hazardous Substances | II- | 14 |
| 45 | Substitution of Securities for Withheld Funds | II- | 14 |
| 46 | Antitrust Claim Assignment | II- | 18 |
| 47 | Examination and Audit of Contracts | II- | 18 |
| 48 | Sanitary Sewer Overflow Emergency Response Plan | II- | 18 |

## PART II

## GENERAL CONDITIONS

**Section 1 Definitions:**

The following terms as used in this contract are respectively defined as follows:

(a) "Contractor": A person, firm or corporation with whom the contract is made by the Owner.

(b) "Building Official": The Building Official of the City of Sebastopol, acting either directly or through properly authorized agents, such agents acting within the scope of the particular duties entrusted to them.

(c) "Engineer": The City Engineer of the City of Sebastopol, acting either directly or through properly authorized agents, such agents acting within the scope of the particular duties entrusted to them.

(d) "Subcontractor": A person, firm or corporation supplying labor and materials or only labor for work at the site of the project for, and under separate contract or agreement with, the Contractor.

(e) "Owner": The City of Sebastopol.

(f) "Work on (at) the project": Work to be performed at the location of the project, including the transportation of materials and supplies to or from the location of the project by employees of the Contractor and any Subcontractor.

**Section 2 Shop or Setting Drawings:**

The Contractor shall submit promptly to the Engineer copies of each shop or setting drawing as specified in Part IV, Project Manual. After examination, such drawings by the engineer and the return thereof, the Contractor shall make such corrections to the drawings as have been indicated and shall furnish the Engineer with two corrected copies. If requested by the Engineer, the Contractor must furnish additional copies. Regardless of corrections made in or approval given to such drawings by the Engineer, the Contractor will nevertheless be responsible for the accuracy of such drawings and for the conformity to the Plans and Specifications, unless he notifies the Engineer in writing of any deviations at the time he furnishes such drawings.

**Section 3 Materials, Services and Facilities:**

(a) It is understood that except as otherwise specifically stated in the Contract documents, the Contractor shall provide and pay for all materials, labor, tools, equipment, water, light, power, transportation, superintendence, temporary construction of every nature, and all other services and facilities of every nature whatsoever necessary to execute, complete and deliver the work within the specified time.

(b) Any work necessary to be performed after regular working hours, on Sundays or Legal Holidays, shall be performed without additional expense to the Owner.

**Section 4 Contractor's Title or Materials:**

No materials or supplies for the work shall be purchased by the Contractor or by any Subcontractor subject to any chattel mortgage or under a conditional sale contract or other agreement by which an interest is retained by the seller. The Contractor warrants that he has good title to all materials and supplies used by him in the work, free from all liens, claims or encumbrances.

**Section 5 Inspection and Testing of Materials:**

(a) All materials and equipment used in the construction of the project shall be subject to adequate inspection and testing in accordance with accepted standards. The laboratory or inspection agency shall be selected by the Owner. The Owner will pay for all laboratory inspection service direct, and not as a part of the contract.

(b) Materials of construction, particularly those upon which the strength and durability of the structure may depend, shall be subject to inspection and testing to establish conformance with specifications and suitability for uses intended.

**Section 6 "Or Equal" Clause:**

Whenever a material, article or piece of equipment is identified on the plans or in the specifications by reference to manufacturers' or vendor's names, trade names, catalogue numbers, etc., it is intended merely to establish a standard; and, any material, article, or equipment of other manufacturers and vendors which will perform adequately the duties imposed by the general design will be considered equally acceptable provided the material, article, or equipment so proposed, is, in the opinion of the Engineer, of equal substance and function. It shall not be purchased or installed by the Contractor without the Engineer's written approval.

**Section 7 Surveys, Permits, and Regulations:**

The Contractor shall employ as a subcontractor, a licensed land surveyor or civil engineer experienced in construction staking as required to perform the construction staking function for this project. The cost of construction staking shall be borne solely by the Contractor. The cost of construction staking shall be considered as included in the cost of the various items of work requiring construction staking and no additional compensation will be allowed.

The Contractor shall procure and pay all permits, licenses and approvals necessary for the execution of his contract.

The Contractor shall comply with all laws, ordinances, rules, orders and regulations relating to performance of the work, the protection of adjacent property, and the maintenance of passageways, guard fences or other protective facilities.

**Section 8 Contractor's Obligations:**

The Contractor shall and will, in good workmanlike manner, do and perform all work and furnish all supplies and materials, machinery, equipment, facilities and means, except as herein otherwise expressly specified, necessary or proper to perform and complete all work required by this contract and said specifications and in accordance with the plans and drawings covered by this contract any and all supplemental plans and drawings, and in accordance with the directions of the Building Official and/or Engineer as given from time to time during the progress of work. He shall furnish, erect, maintain and remove such construction plant and such temporary works as may be required.

The contractor shall construct the Work in strict conformance with all applicable federal, state and local standards, regulations, ordinances and general orders. Should any conditions be present at the site wherein the Work cannot be accomplished in strict conformance with such standards, regulations, ordinances and general orders the Contractor shall notify Owner prior to submitting bids. The Contractor shall, prior to submitting, notify Owner and Architect of any discrepancies, errors or omissions in the contract documents.

The Contractor shall observe, comply with, and be subject to all terms, conditions, requirements and limitations of the contract and specifications, and shall do, carry on, and complete the entire work to the satisfaction of the Architect and the Owner.

**Section 9 Weather Conditions:**

In the event of temporary suspensions of work, or during inclement weather, or whenever the Engineer shall direct, the contractor shall, and will cause his Subcontractors to protect carefully his and their work and materials against damage or injury from the weather. If, in the opinion of the Architect, any work or materials shall have been damaged or injured by reason of failure on the part of the Contractor or any of his Subcontractors so to protect his work, such materials shall be removed and replaced at the expense of the Contractor.

**Section 10 Protection of Work and Property - Emergency:**

The Contractor shall at all times safely guard the Owner's property from injury or loss in connection with this contract. He shall at all times safely guard and protect his own work, and that of adjacent property from damage. The Contractor shall replace or make good any such damage, loss or injury unless such is caused directly by errors contained in the contract or by the Owner, or his duly authorized representatives.

In case of an emergency that threatens loss or injury of property, and/or safety of life, the Contractor will be allowed to act, with previous instructions from the City Engineer, in a diligent manner. He shall notify the Engineer immediately thereafter.

Where the contractor has not taken action but has notified the Engineer of an emergency threatening injury to persons or damage to the work or any adjoining property, he shall act as instructed or authorized by the Engineer.

**Section 11 Reports, Records, and Data:**

The Contractor shall submit to the Owner such schedule of quantities and costs, progress schedules, payrolls, reports, estimates, records and other data as the Owner may request concerning work performed or to be performed under this contract. The Contractor shall maintain and furnish payroll records in accordance with Labor Code Section 1776.

**Section 12 Superintendence by Contractor:**

The Contractor shall maintain on the Project during at least 95% of the time work is being performed by the prime Contractor and/or its subcontractors, a superintendent with the authority to make all decisions relating to the Project. The Contractor shall provide the name and telephone number of the Acting Superintendent at the preconstruction conference. The Superintendent shall be accessible by telephone or pager on a 24-hour basis. It is understood that such representative shall be acceptable to the Engineer and shall be the one who will continue in that capacity for the particular job involved unless he ceases to be on the Contractor's payroll.

**Section 13 Changes in Work:**

No changes in the work covered by the approved Contract Documents shall be made without having prior written approval of the Owner. All requests for contract change orders shall be in writing. Charges or credits for the work covered by the approved change shall be determined by one or more, or a combination of the following methods:

(a) Unit bid prices previously approved.

(b) An agreed lump sum.

(c) The actual cost of:

1. Labor, including foreman;
2. Materials entering permanently into the work;
3. The ownership or rental cost of construction plant and equipment during the time of use on the extra work;
4. Power and consumable supplies for the operation of power equipment;
5. Insurance;
6. Social Security and retirement and unemployment contributions.

To the cost under (c) there shall be added a fixed fee to be agreed upon but not to exceed fifteen percent (15 %) of the actual cost of the work. The fee shall be compensation to cover the cost of supervision, overhead, bond, profit and any other general expenses.

**Section 14 Extras:**

Without invalidating the contract, the Owner may order extra work or make changes by altering, adding to or deducting from the work, the contract sum being adjusted accordingly, and the consent of the Surety being first obtained where necessary or desirable. All the work of the kind bid upon shall be paid for at the price stipulated in the proposal, and no claims for any extra work or materials shall be allowed unless the work is ordered in writing by the Owner or its Engineer acting officially for the Owner, and the price is stated in such order.

**Section 15 Time for Completion and Liquidated Damages:**

It is hereby understood and mutually agreed, by and between the Contractor and the Owner, that the date of beginning and the time for completion as specified in the contract of the work to be done hereunder are **ESSENTIAL CONDITIONS** of this contract; and it is further mutually understood and agreed that the work embraced in this contract shall be commenced on a date to be specified in the "Notice to Proceed."

The Contractor agrees that said work shall be prosecuted regularly, diligently and uninterruptedly at such rate of progress as will insure full completion thereof within the time specified. It is expressly understood and agreed, by and between the Contractor and the Owner, that the time for the completion of the same, taking into consideration the average climatic range and usual industrial conditions prevailing in this locality.

If the said Contractor shall neglect, fail or refuse to complete the work within the time herein specified, or any proper extension thereof granted by the Owner, then the contractor does hereby agree, as a part consideration for the awarding of this contract, to pay the Owner the amount specified in the contract, not as a penalty but as liquidated damages for such breach of contract as hereinafter set forth, for each and every calendar day that the Contractor shall be in default after the time stipulated in the contract for completing the work.

The said amount is fixed and agreed upon by and between the Contractor and the Owner because of the impracticality and extreme difficulty of fixing and ascertaining the actual damages the Owner would in such event sustain, and said amount shall be retained from time to time by the Owner from current periodical estimates.

It is further agreed that time is of the essence of each and every portion of this contract and of the specifications wherein a definite and certain length of time is fixed for the performance of any act whatsoever; and where under the contract an additional time is allowed for the completion of any work, the new time limit fixed by such extension shall be of the essence of this contract. Provided, that the Contractor shall not be charged with liquidated damages or any excess cost when the Owner determines that the Contractor is without fault and the Contractor's reasons for the time extension are acceptable to the Owner; provided, further, that the Contractor shall not be charged with liquidated damages or any excess cost when the delay in completion of the work is due:

(a) To any preference, priority or allocation order duly issued by the Government;

(b) To unforeseeable cause beyond the control and without the fault or negligence of the Contractor, including, but not restricted to, acts of God, or of the public enemy, acts of the Owner, acts of another Contractor in the performance of a contract with the Owner, fires, floods, epidemics, quarantine restrictions, strikes, freight embargoes, and severe weather; and

(c) To any delays of Subcontractors or suppliers occasioned by any of the causes specified in subsections (a) and (b) of this article;

Provided, further, that the Contractor shall, within ten (10) days from the beginning of such delay, unless the Owner shall grant a further period of time prior to the date of final settlement of the contract, notify the Owner, in writing, of the causes of the delay, who shall ascertain the facts and extent of the delay and notify the Contractor within a reasonable time of his decision in the matter.

**Section 16 Correction of Work:**

All work, all materials, whether incorporated in the work or not, all processes of manufacture, and all methods of construction shall be at all times and places subject to the inspection of the Engineer who shall be the final judge of the quality and suitability of the work, materials, processes of manufacture and methods of construction for the purposes for which they are used. Should they fail to meet the Engineer's approval, they shall be forthwith reconstructed, made good, replaced, and/or corrected, as the case may be, by the Contractor at his own expense. Rejected material shall immediately be removed from the site. If, in the opinion of the Building Official and/or Engineer, it is undesirable to replace any defective or damaged materials or to reconstruct to correct any portion of the work injured or not performed in accordance with the Contract Documents, the compensation to be paid to the Contractor shall be reduced by such amount in the judgment of the Building Official and/or Engineer.

**Section 17 Claims for Extra Cost:**

No claim for extra work or cost shall be allowed unless the same was done in pursuance of a written order of the Engineer approved by the Owner, as aforesaid, and the claim presented with the first estimate after the changed or extra work is done. When work is performed under the terms of subparagraph 13(c) of the General Conditions, the Contractor shall furnish satisfactory bills, payrolls and vouchers covering all items of cost and when requested by the Owner, give the Owner access to accounts relating thereto.

**Section 18 Right of the Owner to Terminate Contract:**

In the event that any of the provisions of this contract are violated by the Contractor, or by any of his Subcontractors, the Owner may serve written notice upon the Contractor and the Surety of its intention to terminate the contract, such notices to contain the reasons for such intention to terminate the contract, and unless within ten (10) days after the serving of such notice upon the Contractor, such violation or delay shall cease and satisfactory arrangement of correction be made, the contract shall, upon the expiration of said ten (10) days, cease and terminate. In the event of any such termination, the Owner shall immediately serve notice thereof upon the Surety and the Contractor and the Surety shall have the right to take over and perform the contract; provided however, that if the Surety does not commence performance thereof within ten (10) days from the date of the mailing to such Surety of notice of termination, the Owner may take over the work and prosecute the same to completion by contract or by force account for the account and at the expense of the Contractor and the Contractor and his Surety shall be liable to the Owner for any excess cost occasioned the Owner thereby, and in such event the Owner may take possession of and utilize in completing the work, such materials, appliances, and plant as may be on the site of the work and necessary therefore.

**Section 19 Construction Schedule and Periodic Estimates:**

Immediately after execution and delivery of the contract, and before the first partial payment is made, the Contractor shall deliver to the Owner an estimated construction progress schedule in form satisfactory to the Owner, showing the proposed dates of commencement and completion of each of the various subdivisions of work required under the Contract Documents and the anticipated amount of each monthly payment that will become due the Contractor in accordance with the progress schedule. The Contractor shall also furnish a detailed estimate giving a complete breakdown of the contract price and periodic itemized estimates of work done for the purpose of making partial payments thereon. The costs employed in making up any of these schedules will be used only for determining the basis of partial payments and will not be considered as fixing a basis for additions to or deductions from the contract price.

**Section 20 Payments to Contractor:**

Not later than the 15th day of each calendar month the Owner shall make a progress payment to the Contractor on the basis of a duly certified and approved estimate of the work performed during the preceding calendar month under this contract, but to insure the proper performance of this such estimate, except that at any time after fifty percent (50%) of the work has been completed, if the Engineer finds that satisfactory progress is being made, the Owner may reduce the total amount being retained from payment to five percent (5%) of the total estimated value of said work. Such reduction will only be made upon the written request of the Contractor and shall be approved in writing by the Surety of the Performance and Payment Bond. The Engineer may at anytime during the contract, recommend returning to ten percent (10%) retained if satisfactory progress is not being made by the Contractor.

The Contractor shall submit his monthly estimate of work (in triplicate) no later than the first day of the month.

All work covered by partial payments made shall thereupon become the sole property of the Owner, but this provision shall not be construed as relieving the Contractor from the sole responsibility for the care and protection of work upon which payments have been made or the restoration of any damaged work, or as a waiver of the right of the Owner to require the fulfillment of all of the terms of the contract.

Owner's Right to Withhold Certain Amounts and Make Application Thereof: The Contractor agrees that he will indemnify and save the Owner harmless from all claims growing out of the lawful demands of Subcontractors, laborers, workmen, mechanics, material men, and furnishers of machinery and parts thereof, equipment, power tools, and all supplies, including commissary, incurred in the furtherance of the performance of this contract. The Contractor shall, at the Owner's request, furnish satisfactory evidence that all obligations of the nature herein above designated have been paid, discharged or waived. If the

Contractor fails so to do, then the Owner may, after having served written notice on the said Contractor, either pay unpaid bills, of which the Owner has written notice, direct, or withhold from the Contractor's unpaid compensation a sum of money deemed reasonably sufficient to pay any and all such lawful claims until satisfactory evidence is furnished that all liabilities have been fully discharged whereupon payment to the Contractor shall be resumed, in accordance with the terms of this contract, but in no event shall the provisions of this sentence be construed to impose any obligations upon the Owner to either the Contractor or his Surety. In paying any unpaid bills of the Contractor, the Owner shall be deemed the agent of the contractor, and any payment so made by the Owner shall be considered as a payment made under the contract by the Owner to the Contractor and the Owner shall not be liable to the Contractor for any such payments made in good faith.

**Section 21 Acceptance of Final Payment Constitutes Release:**

The acceptance by the Contractor of final payment shall be and shall operate as a release of the Owner of all claims and all liability to the Contractor for all things done or furnished in connection with this work and for every act and neglect of the Owner and others relating to or arising out of this work. No payment, however, final or otherwise, shall operate to release the Contractor or his Sureties from any obligations under this contract or the Performance and Payment Bond. Final payment shall be made 35 days after recording of Notice of Completion.

**Section 22 Contract Security:**

The Contractor shall furnish a performance bond in an amount at least equal to one hundred percent (100%) of the contract prices as security for the faithful performances of this contract and also a payment bond in an amount not less than fifty percent (50%) of the contract price, as security for the payment of all persons performing labor on the project under this contract and furnishing materials in connection with this contract. Attorneys-in-fact who sign contract bonds must file with each bond a certified and effectively dated copy of their power of attorney.

**Section 23 Mutual Responsibility of Contractors:**

If, through acts of neglect on the part of the Contractor, any other Contractor or any other Subcontractor shall suffer loss or damage on the work, the Contractor agrees to settle with such other Contractor or Subcontractor by agreement or arbitration if such other Contractor or Subcontractor will so settle. If such other Contractor or Subcontractor shall assert any claim against the Owner on account of any damage alleged to have been sustained, the Owner shall notify the Contractor, who shall indemnify and save harmless the Owner against any such claim.

**Section 24 Separate Contract:**

The Contractor shall coordinate his operations with those of other Contractors. Cooperation will be required in the arrangement for the storage of materials and in the detailed execution of work. The Contractor, including his Subcontractors, shall keep informed of the progress and the detail work of other Contractors and shall notify the Engineer immediately of lack of progress or defective workmanship on the part of other Contractors. Failure of a Contractor to keep informed of the work progressing on the site and failure to give notice of lack of progress or defective workmanship by others shall be construed as acceptance by him of the status of the work as being satisfactory for proper coordination with his own work.

**Section 25 Subcontracting:**

The Contractor may utilize the services of specialty Subcontractors on those parts of the work that, under normal contracting practices, are performed by specialty Subcontractors.

The Contractor shall not award any work to any Subcontractor without prior written approval of the Owner, which approval will not be given until the Contractor submits to the Owner a written statement concerning the proposed award to the Subcontractor, which statement shall contain such information as the Owner may require.

The Contractor shall be as fully responsible to the Owner for the acts and omissions of his Subcontractors, and of persons either directly or indirectly employed by them, as he is for the acts and omissions of persons directly employed by him.

The Contractor shall cause appropriate provisions to be inserted in all Subcontractors relative to the work to bind Subcontractors to the Contractor by the terms of the General Conditions and other Contract documents insofar as applicable to the work of Subcontractors and to give the Contractor the same power as regards terminating any subcontract that the Owner may exercise over the Contractor under any provisions of the Contract Documents.

Nothing contained in this contract shall create any contractual relation between any Subcontractor and the Owner.

**Section 26 Engineer's Authority:**

The Engineer shall give all orders and directions contemplated under this contract and specifications, relative to the execution of the work. The Engineer shall determine the amount, quality, acceptability, and fitness of the several kinds of work and materials which are to be paid for under this contract and shall decide all questions which may arise in relation to said work and the construction thereof. The Engineer's estimates and decisions shall be final and conclusive, except as herein otherwise expressly provided. In case any question shall arise between the parties hereto relative to said contract or specifications, the determination or decision of the Engineer shall be a condition precedent to the right of the Contractor to receive any money or payment for work under this contract affected in any manner or to any extent by such question.

**Section 27 Use of Premises and Removal of Debris:**

The Contractor expressly undertakes at his own expense:

(a) to take every precaution against injuries to persons or damage to property;

(b) to store his apparatus, materials, supplies and equipment in such orderly fashion at the site of the work as will not unduly interfere with the progress of his work;

(c) to place upon the work or any part thereof only such loads as are consistent with the safety of that portion of the work.

(d) to clean up frequently all refuse, rubbish, scrap materials, and debris caused by his operations, to the end that at all times the site of the work shall present a neat, orderly and workmanlike appearance;

(e) before final payment to remove all surplus materials, false-work, temporary structures, including foundations thereof, plant of any description and debris of every nature resulting from his operations, and to put the site in a neat, orderly condition;

(f) to effect all cutting, fitting or patching of his work required to make the same to conform to the plans and specifications and, except with the consent of the Engineer, not to cut or otherwise alter the work of any other Contractor.

**Section 28 Quantities of Estimate:**

Wherever the estimated quantities of work to be done and materials to be furnished under this contract are shown in any of the documents including the proposal, they are given for use in comparing bids and the right is especially reserved except as herein otherwise specifically limited, to increase or diminish them as may be deemed reasonably necessary or desirable by the Owner to complete the work contemplated by this contract, and such increase or diminution shall in no way vitiate this contract, nor shall any such increase or diminution give cause for claims or liability for damages.

**Section 29 Lands and Rights-of-Way:**

Prior to the start of construction, the Owner shall obtain all lands and rights-of-way necessary for the carrying out and completion of work to be performed under this contract.

**Section 30 General Guaranty:**

Neither the final certificate of payment nor any provision in the Contract Documents, nor partial or entire occupancy of the premises by the Owner, shall constitute an acceptance of work not done in accordance with the Contract Documents or relieve the Contractor of liability in respect to any express warranties or responsibility for faulty materials or workmanship. The Contractor shall remedy any defects in the work and pay for any damage to other work resulting therefrom, which shall appear within a period of one year from the date of final acceptance of the work unless a longer period is specified. The Owner will give notice of observed defects with reasonable promptness.

**Section 31 Insurance Requirements for Contractors:**

Refer to Part I, Information for Bidders for Insurance Requirements.

**Section 32 Workmen's Compensation Insurance:**

Workmen's Compensation Insurance: The Contractor shall maintain adequate workmen's compensation insurance under the laws of the State of California for all labor employed by him or by any Subcontractor under him who may come within the protection of such workmen's compensation laws of the State of California, and shall provide, where practicable, employers' general liability insurance for the benefit of his employees and the employees of any Subcontractor under him not protected by such compensation laws; and proof of such insurance satisfactory to the Governing Body shall be given by filing certificates of such insurance with the Engineer of work in form satisfactory to the Governing Body. If such insurance is underwritten by any agency other than the State Compensation Fund, such agency shall be a company authorized to do business in the State of California. See Insurance Requirements for Contractors, in Part I, Information for Bidders.

**Section 33 Claims and Arbitration:**

Public Contract Code Sections 20104 to 20104.6 and Section 9-1.10, "Arbitration," of the Standard Specifications are hereby incorporated into this contract. In the event of a discrepancy, the Public Contracts Code shall take precedence.

Sections 20104 to 20104.6 of the Public Contracts Code state the following:

§20104. Application of article; "Public work"; "Claim"
(a)(1) This article applies to all public works claims of three hundred seventy-five thousand dollars ($375,000) or less which arise between a contractor and a local agency.
(2) This article shall not apply to any claims resulting from a contract between a contractor and a public agency when the public agency has elected to resolve any disputes pursuant to Article 7.1 (commencing with Section 10240) of Chapter 1 of Part 2.
(b)(1) "Public work" has the same meaning as in Sections 3100 and 3106 of the Civil Code, except that "public work" does not include any work or improvement contracted for by the state or Regents of the University of California.
(2) "Claim" means a separate demand by the contractor for (A) a time extension, (B) payment of money or damages arising from work done by, or on behalf of, the contractor pursuant to the contract for a public work and payment of which is not otherwise expressly provided for or the claimant is not otherwise entitled to, (C) an amount the payment of which is disputed by the local agency.
(c) The provisions of this article or summary thereof shall be set forth in the plans or specifications for any work which may give rise to a claim under this article.

§20104.2. Requirements to submit claim; Agency's response; Dispute by claimant over response; Failure of agency to respond; Inapplicability of article to tort claims
For any claim subject to this article, the following requirements apply:
(a) The claim shall be in writing and include the documents necessary to substantiate the claim. Claims must be filed on or before the date of final payment. Nothing in this subdivision is intended to extend the time limit or supersede notice requirements otherwise provided by contract for the filing of claims.
(b)(1) For claims of less than fifty thousand dollars ($50,000), the local agency shall respond in writing to any written claim within 45 days of receipt of the claim, or may request, in writing, within 30 days of receipt of the claim, any additional documentation supporting the claim or relating to defenses to the claim the local agency may have against the claimant.
(2) If additional information is thereafter required, it shall be requested and provided pursuant to this subdivision, upon mutual agreement of the local agency and the claimant.
(3) The local agency's written response to the claim, as further documented, shall be submitted to the claimant within 15 days after receipt of the further documentation or within a period of time no greater than that taken by the claimant in producing the additional information, which ever is greater.
(c)(1) For claims of over fifty thousand dollars ($50,000) and less than or equal to three hundred seventy-five thousand dollars ($375,000), the local agency shall respond in writing to all written claims within 60 days of receipt of the claim, or may request, in writing, within 30 days of receipt of the claim, any additional documentation supporting the claim or relating to defenses to the claim the local agency may have against the claimant.
(2) If additional information is thereafter required, it shall be requested and provided pursuant to this subdivision, upon mutual agreement of the local agency and the claimant.
(3) The local agency's written response to the claim, as further documented, shall be submitted to the claimant within 30 days after receipt of the further documentation, or within a period of time no greater than that taken by the claimant in producing the additional information or requested documentation, whichever is greater.
(d) If the claimant disputes the local agency's written response, or the local agency fails to respond within the time prescribed, the claimant may so notify the local agency, in writing, either within 15 days of receipt of the local agency's response or within 15 days of the local agency's failure to respond within the time prescribed, respectively, and demand an informal conference to meet and confer for settlement of the issues in dispute. Upon a demand, the local agency shall schedule a meet and conference within 30 days for settlement of the dispute.
(e) Following the meet and confer conference, if the claim or any portion remains in dispute, the claimant may file a claim as provided in Chapter 1 (commencing with Section 900) and Chapter 2 (commencing with Section 910) of Part 3 of Division 3.6 of Title 1 of the Government Code. For purposes of those provisions, the running of the period of time within which a claim must be filed shall be tolled from the time the claimant submits his or her written claim pursuant to subdivision (a) until the time that claim is

denied as a result of the meet and confer process, including any period of time utilized by the meet and confer process.
(f) This article does not apply to tort claims and nothing in this article is intended nor shall be construed to change the time periods for filing tort claims or actions specified by Chapter 1 (commencing with Section 900) and Chapter 2 (commencing with Section 910) of Part 3 of Division 3.6 of Title 1 of the Government Code.

§20104.4. Procedures to resolve claims
The following procedures are established for all civil actions filed to resolve claims subject to this article:
(a) Within 60 days, but no earlier than 30 days, following the filing or responsive pleadings, the court shall submit the matter to nonbinding mediation unless waived by mutual stipulation of both parties. The mediation process shall provide for the selection within 15 days by both parties of a disinterested third person as mediator, shall be commenced within 30 days of the submittal, and shall be concluded within 15 days from the commencement of the mediation unless a time requirement is extended upon a good cause showing to the court or by stipulation of both parties. If the parties fail to select a mediator within the 15-day period, any party may petition the court to appoint the mediator.
(b)(1) If the matter remains in dispute, the case shall be submitted to judicial arbitration pursuant to Chapter 2.5 (commencing with Section 1141.10) of Title 3 of Part 3 of the Code of Civil Procedure, notwithstanding Section 1141.11 of that code. The Civil Discovery Act of 1986 (Article 3 (commencing with Section 2016) of Chapter 3 of Title 3 of Part 4 of the Code of Civil Procedure) shall apply to any proceeding brought under this subdivision consistent with the rules pertaining to judicial arbitration.
(2) Notwithstanding any other provision of law, upon stipulation of the parties, arbitrators appointed for the purposes of this article shall be experienced in construction law, and, upon stipulation of the parties, mediators and arbitrators, shall be paid necessary and reasonable hourly rates of pay not to exceed their customary rate, and such fees and expenses shall be paid equally by the parties except in the case of arbitration where the arbitrator, for good cause, determines a different division. In no event shall these fees or expenses by paid by state or county funds.
(3) In addition to Chapter 2.5 (commencing with Section 1141.10) of Title 3, of Part 3 of the Code of Civil Procedure, any party who after receiving an arbitration award requests a trial de novo but does not obtain a more favorable judgment shall, in addition to payment of costs and fees under this chapter, pay the attorney's fees of the other party arising out of the trial de novo.
(c) The court may, upon request by any party, order any witness to participate in the mediation or arbitration process.

§20104.6. Payment of portion of claim which is undisputed; Payment of interest on arbitration award or judgment
(a) No local agency shall fail to pay money as to any portion of a claim which is undisputed except as otherwise provided in the contract.
(b) In any suit filed under Section 20104.4, the local agency shall pay interest at the legal rate on any arbitration award or judgment. The interest shall begin to accrue on the date the suit is filed in a court of law.

**Section 34 Damage by Storm, Flood, Tidal Wave or Earthquake:**

If the project is damaged by storm, flood, tidal wave or earthquake, then payment shall be made to the Contractor for repair in accord with Section 7-1.165 of the State of California Department of Transportation Standard Specifications except that payment or participation in payment shall only be made when such damage exceeds 5 percent (5%) of the amount of the Contractor's bid.

**Section 35 Checking of Drawings:**

The Contractor shall check all drawings furnished him immediately upon their receipt and shall promptly notify the Engineer of any discrepancies. Figures shown on drawings shall in general be followed in

preference to scale measurements. Large scale drawings shall in general govern over small scale drawings. The Contractor shall compare all drawings and verify the figures before layout of the work, and shall be responsible for any errors which might have been avoided by such comparison.

**Section 36 As-built Drawings:**

The Contractor shall deliver to the Engineer, one set of marked prints showing any deviation from the contract drawings. The Contractor shall show all information necessary for the preparation of an accurate record of the installation. This copy shall be neatly prepared and shall be submitted from time to time so that it may be checked by the Engineer before the work is covered up. As-Built Drawings shall be complete and approved before final payment being issued.

**Section 37 Substitute Materials and Equipment:**

The Contractor may, at his option, suggest substitute makes and kinds of materials and equipment (other than those specified), indicating the amount of credit or extra cost in each instance. Acceptance of substitute items shall be only by written approval of the City. In the event the Engineer's evaluation of the suggested substitute item is required to obtain City's approval, the Contractor shall pay the Engineer's fee for investigating and evaluating the substitution. In all instances of substitutions, the Contractor shall assume full responsibility for having all substitute items comply in all respects with the applicable portions of the contract specifications, except where such requirement is specifically waived by the City.

**Section 38 Defective Material or Work:**

Materials not conforming to the requirements of these specifications shall be considered as defective, and all such materials, whether in place or not, shall be rejected and shall be removed immediately from the site of the work, unless otherwise permitted by the Engineer. No rejected material, the defects of which have been subsequently corrected, shall be used until approved in writing by the Engineer.

Work which does not conform to the requirements of these specifications or is deficient in construction, shall be rejected by the Engineer and be replaced by the Contractor at his own proper cost, charge and expense, and without allowance for additional cost of such replacement to the Contractor.

Upon failure on the part of the Contractor to comply with any order of the Engineer made under the provisions of these Articles or Sections, the Engineer shall have authority to remove and replace defective material or work at the expense of the Contractor, and the Contractor and his Sureties shall be liable therefor.

**Section 39 Right to Retain Imperfect Work:**

If any portion of the work done or material furnished under this contract shall prove defective and not in conformance with the drawings and specifications, and if the imperfection in the same shall not be of sufficient magnitude or importance to make the work dangerous or undesirable, the Engineer shall have the right and authority to retain such work instead of requiring the imperfect work to be removed and reconstructed, but he shall make deductions therefor in the payments due or to become due for the applicable contract item(s) of work as may be just and reasonable.

**Section 40 Existing Utilities:**

The Contractor is responsible for protection of all utility services and facilities within the limits of this work. The Contractor is responsible for checking in the field the locations as shown, and is further responsible for any and all utility laterals or services where presence or location is unknown.

The Contractor is responsible for not interrupting any of the utility services while work is in progress and he shall take proper precautions to safeguard such utilities while working near them. Should any utility be damaged during construction, all cost of replacing or repairing shall be borne by the Contractor.

The Pacific Gas and Electric Company and Pacific Telephone shall be notified 48 hours prior to any construction near its underground facilities, and shall be notified by the Contractor well in advance of construction to make utility lines.

The Contractor shall take precaution against damage of private water and gas service lines when crossing private property.

The Owner shall be notified and a request made that all sewer and water lines be marked before start of construction.

Prior to starting work, the contractor shall (a minimum of 2 working days in advance) call Underground Service Alert (USA), toll free, at (800) 642-2444 and provide USA with all necessary data relative to the proposed work. USA will accept calls and process information to participating agencies who have underground facilities in the area between the hours of 7:30 a.m. and 5:00 p.m. daily, except Saturdays, Sundays, and holidays. Between the hours of 5:00 p.m. and 7:30 a.m. calls will be recorded and then processed after 7:30 a.m. For emergency situations, after hours and on Saturdays, Sundays and holidays, the Contractor shall contact the organization owning the affected facility. Upon notification, agencies having facilities in the area of the proposed excavation, will mark their locations in the field using USA standard colors and codes to identify the facility.

**Section 41 Differing Site Conditions:**

During the progress of the work, if subsurface or latent physical conditions are encountered at the site differing materially from those indicated in the contract or if unknown physical conditions of any unusual nature, differing materially from those ordinarily encountered and generally recognized as inherent in the work provided for in the contract, are encountered at the site, the party discovering such conditions shall promptly notify the other party in writing of the specific differing conditions before they are disturbed and before the affected work is performed.

Upon written notification, the Engineer will investigate the conditions, and if the Engineer determines that the conditions materially differ and cause an increase or decrease in the cost or time required for the performance of any work under the contract, an adjustment excluding loss of anticipated profits will be made and the contract modified in writing accordingly. The Engineer will notify the Contractor of the determination as to whether or not an adjustment of the contract is warranted.

No contract adjustment which results in a benefit to the Contractor will be allowed unless the Contractor has provided the required written notice.

No contract adjustment will be allowed under the provisions specified in this section for any effects caused on unchanged work.

Any contract adjustment warranted due to differing site conditions will be made in accordance with the provisions in Section 4-1.03, "Changes," of the Standard Specifications.

**Section 42 Project Appearance:**

The Contractor shall maintain a neat appearance to the work.

In any area visible to the public, the following shall apply:

When practicable, broken concrete and debris developed during clearing and grubbing shall be disposed of concurrently with its removal. If stockpiling is necessary, the material shall be removed or disposed of weekly.

The Contractor shall furnish trash bins for all debris from structure construction. All debris shall be placed in trash bins daily. Forms or falsework that are to be reused shall be stacked neatly concurrently with their removal. Forms and falsework that are not to be reused shall be disposed of concurrently with their removal.

Full compensation for conforming to the provisions in this section, not otherwise provided for, shall be considered as included in prices paid for the various contract items of work involved, and no additional compensation will be allowed therefor.

**Section 43 Hazardous Waste in Excavation:**

If the Contractor encounters material in excavation which he/she has reason to believe may be hazardous waste, as defined by Section 25117 of the Health and Safety Code, he/she shall immediately so notify the Engineer in writing. Excavation in the immediate area of the suspected hazardous material shall be suspended until the Engineer authorizes it to be resumed. If such suspension delays the current controlling operation, the Contractor will be granted an extension of time as provided in Section 8-1.07, "Liquidated Damages," of the Standard Specifications.

If such suspension delays the current controlling operation more than two working days, the delay will be considered a right-of-way delay and the Contractor will be compensated for such delay as provided in Section 8-1.09, "Right-of-Way Delays," of the Standard Specifications.

The department reserves the right to use other forces for exploratory work to identify and determine the extent of such material and for removing hazardous material from such area.

**Section 44 Removal of Asbestos and Hazardous Substances:**

When the presence of asbestos or hazardous substances is not shown on the plans or indicated in the Specifications and the Contractor encounters materials which the Contractor reasonably believes to be asbestos or a hazardous substance as defined in Section 25914.1 of the Health and Safety Code, and the asbestos or hazardous substance has not been rendered harmless, the Contractor may continue work in unaffected areas reasonably believed to be safe, and shall immediately cease work in the affected area and report the condition to the Engineer in writing.

In accordance with Section 25914.1 of the Health and Safety Code, all such removal of asbestos or hazardous substances including any exploratory work to identify and determine the extent of such asbestos or hazardous substance will be performed by separate contract.

If delay of work in the area delays the current controlling operation, the delay will be considered a right-of-way delay and the Contractor will be compensated for such delay as provided in Section 8-1.09, "Right-of-Way Delays," of the Standard Specifications.

**Section 45 Substitution of Securities for Withheld Funds:**

Upon the Contractor's request, pursuant to Public Contract Code 22300, the Owner will pay to the Contractor the funds withheld from progress payments to ensure performance of the contract, if the Contractor substitutes satisfactory securities as follows.

(a) At the request and expense of the Contractor, securities equivalent to the amount withheld shall be deposited with the Owner, or with a state or federally chartered bank in this state as the escrow agent, who shall then pay those moneys to the Contractor. Upon satisfactory completion of the contract, the securities shall be returned to the Contractor.

(b) Alternatively, the Contractor may request and the Owner shall make payment of retentions earned directly to the escrow agent at the expense of the Contractor. At the expense of the Contractor, the Contractor may direct the investment of the payments into securities and the Contractor shall receive the interest earned on the investments upon the same terms provided for in this section for securities deposited by the Contractor. Upon satisfactory completion of the contract, the Contractor shall receive from the escrow agent all securities, interest, and payments received by the escrow agent from the owner, pursuant to the terms of this section.

(c) Securities eligible for investment under this section shall include those listed in Section 16430 of the Government Code, bank or savings and loan certificates of deposit, interest-bearing demand deposit accounts, standby letters of credit, or any other security mutually agreed to by the Contractor and the Owner.

The Contractor shall be the beneficial owner of any securities substituted for moneys withheld and shall receive any interest thereon.

(d)(1) If the Contractor elects to receive interest on moneys withheld in retention by the Owner, the Contractor shall, at the request of any subcontractor, make that option available to the subcontractor regarding any moneys withheld in retention by the Contractor from the subcontractor. If the Contractor elects to receive interest on any moneys withheld in retention by the Owner, then the subcontractor shall receive the identical rate of interest received by the Contractor on any retention moneys withheld from the subcontractor by the Contractor, less any actual pro rata costs associated with administering and calculating that interest. In the event that the interest rate is a fluctuating rate, the rate for the subcontractor shall be determined by calculating the interest rate paid during the time that retentions were withheld from the subcontractor. If the Contractor elects to substitute securities in lieu of retention, then, by mutual consent of the Contractor and subcontractor, the subcontractor may substitute securities in exchange for the release of moneys held in retention by the Contractor.

(2) This subdivision shall apply only to those subcontractors performing more than five percent of the Contractor's total bid.

(3) No contractor shall require any subcontractor to waive any provision of this section.

(e) The escrow agreement used hereunder shall be substantially similar to the following form:

**ESCROW AGREEMENT FOR**
**SECURITY DEPOSITS IN LIEU OF RETENTION**

This Escrow Agreement is made and entered into by and between _____ _____ whose address is _____ _____ hereinafter called "Owner,' _____ whose address is _____ _____ hereinafter called "Contractor" and _____ whose address is _____ _____ hereinafter called "Escrow Agent."

For the consideration hereinafter set forth, the Owner, Contractor and Escrow Agent agree as follows:

(1) Pursuant to Section 22300 of the Public Contract Code of the State of California, Contractor has the option to deposit securities with Escrow Agent as a substitute for retention earnings required to be withheld by Owner pursuant to the Construction Contract entered into between the Owner and Contractor for _____ in the amount of _____ dated _____ (hereinafter referred to as the "Contract"). Alternatively, on written request of the Contractor, the Owner shall make payments of the retention earnings directly to the Escrow Agent. When the Contractor deposits the securities as a substitute for Contract earnings, the Escrow Agent shall notify the Owner within 10 days of the deposit. The market value of the securities at the time of the substitution shall be at least equal to the cash amount then required to be withheld as retention under the terms of the Contract between the Owner and Contractor. Securities shall be held in the name of _____, and shall designate the Contractor as the beneficial owner.

(2) The Owner shall make progress payments to the Contractor for those funds which otherwise would be withheld from progress payments pursuant to the Contract provisions, provided that the Escrow Agent hold securities in the form and amount specified above.

(3) When the Owner makes payment of retentions earned directly to the Escrow Agent, the Escrow Agent shall hold them for the benefit of the Contractor until the time that the escrow created under this contract is terminated. The Contractor may direct the investment of the payments into securities. All terms and conditions of this agreement and the rights and responsibilities of the parties shall be equally applicable and binding when the Owner pays the Escrow Agent directly.

(4) Contractor shall be responsible for paying all fees for the expenses incurred by Escrow Agent in administering the Escrow Account and all expenses of the Owner. These expenses and payment terms shall be determined by the Owner, Contractor, and Escrow Agent.

(5) The interest earned on the securities or the money market accounts held in escrow and all interest earned on that interest shall be for the sole account of Contractor and shall be subject to withdrawal by Contractor at any time and from time to time without notice to the Owner.

(6) Contractor shall have the right to withdraw all or any part of the principal in the Escrow Account only by written notice to Escrow Agent accompanied by written authorization from the Owner to the Escrow Agent that Owner consents to the withdrawal of the amount sought to be withdrawn by Contractor.

(7) The Owner shall have a right to draw upon the securities in the event of default by the Contractor. Upon seven days' written notice to the Escrow Agent from the owner of the default, the Escrow Agent shall immediately convert the securities to cash and shall distribute the cash as instructed by the Owner.

(8) Upon receipt of written notification from the Owner certifying that the Contract is final and complete, and that the Contractor has complied with all requirements and procedures applicable to the Contract, Escrow Agent shall release to Contractor all securities and interest on deposit less escrow fees and charges of the Escrow Account. The escrow shall be closed immediately upon disbursement of all moneys and securities on deposit and payment of fees and charges.

(9) Escrow Agent shall rely on the written notifications from the Owner and the Contractor pursuant to Sections (5) to (8), inclusive, of this Agreement and the Owner and Contractor shall hold Escrow Agent harmless form Escrow Agent's release and disbursement of the securities and interest as set forth above.

(10) The names of the persons who are authorized to give written notice or to receive written notice on behalf of the Owner and on behalf of the Contractor in connection with the foregoing, and exemplars of their respective signatures are as follows:

**On behalf of Owner:**

_____
Title

_____
Name

_____
Signature

_____
Address

**On behalf of Contractor:**

_____
Title

_____
Name

_____
Signature

_____
Address

On behalf of Escrow Agent:

_____
Title

_____
Name

_____
Signature

_____
Address

At the time the Escrow Account is opened, the Owner and Contractor shall deliver to the Escrow Agent a fully executed counterpart of the is Agreement.

IN WITNESS WHEREOF, the parties have executed this Agreement by their proper officers on the date first set forth above.

Owner

_____
Title

_____
Name

_____
Signature

Contractor

_____
Title

_____
Name

_____
Signature

**Section 46 Antitrust Claim Assignment:**

In entering into this public works contract or a subcontract to supply goods, services, or materials pursuant to a public works contract, the Contractor or subcontractor offers and agrees to assign to the awarding body all rights, title and interest in and to all causes of action it may have under Section 4 of the Clayton Act (15 U.S.C. Sec. 15) or under the Cartwright Act (Chapter 2 (commencing with Section 16700) of Part 2 of Division 7 of the Business and Professions Code), arising from purchases of goods, services or materials pursuant to the public works contract or the subcontract. This assignment shall be made and become effective at the time the awarding body tenders final payment to the Contractor, without further acknowledgement by the parties.

**Section 47 Examination and Audit of Contracts:**

This contract shall be subject to the examination and audit of the State Auditor at the request of the Owner or as part of any audit of the Owner, for a period of three years after final payment under the contract.

The examinations and audits under this section shall be confined to those matters connected with the performance of the contract, including, but not limited to, the costs of administering the contract.

**Section 48 Sanitary Sewer Overflow Emergency Response Plan:**

The City has adopted an Overflow Emergency Response Plan (OERP) as required by the SWRCB Statewide General Waste Discharge Requirements, in order to support an orderly and effective response to Sanitary Sewer Overflows (SSOs).

Sanitary Sewer Overflows (SSOs) are defined as follows:
Any overflow, spill, release, discharge or diversion of untreated or partially treated wastewater from a sanitary sewer system including:

(i) Overflows or releases of untreated or partially treated wastewater that reach waters of the United States;

(ii) Overflows or releases of untreated or partially treated wastewater that do not reach the waters of the United States; and

(iii) Wastewater backups into buildings and on private property that are caused by blockages or flow conditions within the publicly owned portion of a sanitary sewer system.

The Contractor shall follow the following procedures in the event that you cause or witness a Sanitary Sewer Overflow.

- **IMMEDIATELY NOTIFY THE CITY**
  - During Business Hours: (707) 823-5331
  - After Hours: (707) 829-4400
- **PROTECT THE STORM DRAINS USING MATS, DYKES, BERMS, ETC.**
- **PROTECT THE PUBLIC -** If the spill is entering an area where public contact may occur, and if it is safe to do so, prevent, to the extent possible, public contact with the sewage until City Maintenance Workers arrive.
- **PROVIDE INFORMATION** - Provide the City Maintenance Workers with information about the overflow such as start time, appearance point, suspected cause, weather conditions, etc.
- Direct ALL media and public relations requests to:
  - Engineering Manager: (707) 823-2151
  - City Manager: (707) 823-1153

## PART III

## SPECIAL PROVISIONS


| SECTION | TITLE | PAGE |
|---|---|---|
| 1 | Contract | III- 1 |
| 2 | Location of Work | III- 1 |
| 3 | Governing Documents | III- 1 |
| 4 | Description of Work | III- 1 |
| 5 | Permits | III- 1 |
| 6 | Signs and Barricades | III- 1 |
| 7 | Dust and Debris Control | III- 2 |
| 8 | Watering | III- 2 |
| 9 | Existing Facilities | III- 2 |
| 10 | Construction Grades | III- 2 |
| 11 | Proposed Schedule of Work | III- 3 |
| 12 | Material to be Encountered in Excavations | III- 3 |
| 13 | Copies Furnished | III- 3 |
| 14 | Additional Drawings | III- 3 |
| 15 | City Furnished Facilities | III- 3 |
| 16 | Public Convenience, Safety and Traffic | III- 3 |
| 17 | Areas for Contractor's Use | III- 4 |
| 18 | Trees, Shrubs, Grass Areas, Etc. | III- 4 |
| 19 | Damage to Existing Improvements | III- 4 |
| 20 | Order of Work | III- 5 |
| 21 | Property Owner Notifications | III- 5 |
| 22 | Temporary Erosion Control | III- 5 |
| 23 | Preservation of Property | III- 6 |
| 24 | Progress Schedule | III- 7 |
| 25 | Cooperation | III- 7 |
| 26 | Safety | III- 7 |
| 27 | Obstructions | III- 7 |
| 28 | Hours of Work | III- 8 |
| 29 | Construction Area Signs | III- 8 |
| 30 | Maintaining Traffic | III- 8 |
| 31 | Traffic Control | III- 10 |
| 32 | Existing Facilities | III- 11 |

# PART III

## SPECIAL PROVISIONS

**Section 1 Contract:**

All work described in the plans and specifications will be let under one contract in the manner set forth in the Notice to Bidders, and in the Bidder's Proposal. The City reserves the right to award any combination of projects, dependent upon available funds.

**Section 2 Location of Work:**

The work is located at IVES POOL HOUSE, IVES PARK and the SEBASTOPOL CENTER FOR THE ARTS as indicated in Appendix B.

**Section 3 Governing Documents:**

All work shall be done in accordance with the General Conditions, these Special Provisions, Construction Plans and details, the 2010 Americans with Disabilities Act Standards for Accessible Design, the 2013 California Building Code (Title 24) as amended and the City of Sebastopol Standard Plans and Details dated July 1998 insofar as they may apply.

The Standard Specifications of the Department of Transportation, State of California, dated July 2010, hereinafter referred to as the Standard Specifications.

In the case of conflict between the Standard Specifications, and these Special Provisions, the Special Provisions shall take precedence over and be used in lieu of such conflicting portions. In the case of conflict between the approved construction documents, 2010 Americans with Disabilities Act Standards for Accessible Design, the 2013 California Building Code (Title 24), the most stringent shall apply and govern the construction of the work.

**Section 4 Description of Work:**

The work consists of the two separate bid components; Bid Component A and Bid Component B as follows:

**BID COMPONENT A: ADA Upgrades**

1. Accessibility site and building upgrades including without limitation
    a. New concrete accessible pedestrian path of travel extending from High Street to the Ives Pool House;
    b. Provision of accessible handrails and warning stripes at existing stairs leading from Willow Ave. to Ives Pool House.
    c. Van accessible parking and access aisle at the Sebastopol Center for the Arts along with associated pavement markings and signs;
    d. Replace one (1) gate with a new accessible gate entrance to pool area;

e. Removal of existing drinking fountains (2 locations) and provision of new fully accessible drinking fountains;
f. New accessible concrete landing and replacement of threshold, provision of kick plates at main public entry door serving lobby;
g. New accessible concrete landings and replacement of exterior doors, frames and all associated hardware at entries leading from pool area to shower / dressing rooms;
h. Replacement of interior doors, frames all associated hardware at entries leading from lobby area to shower / dressing rooms.
i. Replacement of existing shower column and hook-ups with a new shower column and hook-ups at men's shower room;
j. Provision of a new wheelchair accessible shower compartment at men's and women's showers with associated plumbing and accessible accessories;
k. Replacement of existing toilet fixtures, reconfiguration of plumbing fixtures and provision of new accessible toilet and lavatory fixtures and new toilet compartments at men's and women's dressing rooms along with accessible accessories;
l. Provision of miscellaneous toilet room and shower room accessories;
m. Provision of miscellaneous signage.
n. Provision of all materials, labor and associated finishes, appurtenances, and assemblies for a proper fit and function, adjusted as required to meet industry standards, regulations and accessibility requirements.

**BID COMPONENT B: Bath House Expansion**

1. Building addition including without limitation
   a. Provision of a 224 square foot addition to Ives Pool House – Womens' dressing room and shower expansion to visually match the existing building;
   b. Relocation of de-humidifier along with associated electrical circuit;
   c. Provision of GFIC outlets and three new water and shatter proof LED light fixtures with associated controls, photocell and time clock along with associated circuits and conduit;
   d. Extension of existing mechanical ductwork and provision of a linear flush mounted wall diffuser;
   e. Provision of two shower columns and associated plumbing;
   f. Provision of built-in benches;
   g. Provision of miscellaneous shower room and dressing room accessories;
   h. Provision of new roofing assemblies and flashings at the addition. New roofing shall be T.P.O. to match and be integrated with and provide a water and fully weather proof seal at the interface with the existing roofing to remain at the existing pool house. Provisions of all flashing assemblies, sealants and appurtenances for penetrations and roof mounted elements.
   i. Provision of all materials, labor and associated finishes, appurtenances, and assemblies for a proper fit and function, adjusted as required to meet industry standards, regulations and accessibility requirements.

**Section 5 Permits:**

This Contract will constitute the contractor's permit to perform work on Owner's property. The contractor and any subcontractors are also required to obtain City business licenses. The contractor shall be responsible for obtaining these and for paying any associated fees prior to the start of construction and inspection fees as required.

**Section 6 Signs and Barricades:**

The Contractor shall furnish all signs and barricades, the cost of which shall be included in the item for Traffic Control System. Contractor shall acquaint himself with applicable portions of Section 7 of the Standard Specifications relating to Public Convenience, Public Safety, Portable Delineators, Preservation of Property, and Indemnity and Insurance.

The Contractor shall ensure for the continuity of safe and accessible paths of travel to the public to facilities to remain open to the public during all phases of the construction.

**Section 7 Dust and Debris Control:**

Dust control shall conform to the provisions in Section 10, "Dust Control," of the Standard Specifications and these Special Provisions.

The Contractor shall be responsible for all mud, rocks, dust, dirt, debris and contaminant producing materials that originate in the project area and are deposited on the site of the Work and any other public or private property by truck tire, spillage, or by other means. The contractor shall, before the end of each day's work, clean all construction areas and adjacent areas affected by construction activities.

The Contractor shall provide for the prevention of contaminants and dust entering any mechanical and plumbing systems.

The Contractor shall control dust by any appropriate means as approved by the City Engineer.

**Section 8 Coordination, Scheduling and Sequencing of Work – Continuity of Public Services:**

The public service facilities will remain operational, as reasonably limited by and coordinated with construction activities. Sequencing the work to accommodate continuity of public services shall be made in advance with the City's representative. Any discontinuity of services shall be limited to that approved in advance by the City's representative. Temporary interruption of utilities shall be of the least reasonable duration as approved in advance by the City's representative.

**Section 9 Existing Facilities:**

As part of the work, existing valves, services, utilities, pipes, conduit, electrical, plumbing, mechanical systems and irrigation sprinklers and all other fixtures and equipment to remain shall be protected from damage. Contractor shall bring any currently damaged facilities or deteriorated conditions affecting the

work to the attention of the Engineer prior to commencing work in affected areas. If none are reported, all damaged facilities within the job site shall be assumed caused by the Contractor.

**Section 10 Construction Grades:**

The Contractor is responsible for laying out any lines and grades. This layout shall be subject to review and approval by the City before the Contractor proceeds.

**Section 11 Proposed Schedule of Work:**

| | |
|---|---|
| **Bid Opening** | **October 6, 2016, 3:00 p.m.** |
| **City Council Selects Contractor** | **November 1, 2016** |
| **Deadline to Execute Contract** | **Ten working days from Notice of Award** |
| **Notice to Proceed (approx.)** | **January 5, 2017** |
| **Completion Date (approx.)*** | **April 7, 2017** |
| ***Time of Completion,** | **Sixty-five (65) working days** |

**Section 12 Material to be Encountered in Excavations:**

The Contractor shall visit the site and satisfy himself regarding the character of the material which may be encountered. The Contractor shall refer to the Soils Report prepared by Patrick Conway & Associates dated 7/28/2016.

**Section 13 Copies Furnished:**

The Engineer will furnish to the Contractor, free of charge, five (5) sets of the specifications and full size drawings.

**Section 14 Additional Drawings:**

The Engineer will furnish from time to time such additional drawings and information as he may consider necessary for the Contractor's guidance, and the Contractor shall make his work conform to all such drawings.

**Section 15 City Furnished Facilities:**

Water is available from a filler pipe at the City Corporation Yard, or the Contractor may request a hydrant service from the Sebastopol Public Works Department by paying a security deposit of $200.00, and an installation and removal fee of $100 for a backflow preventer device to be installed by City forces and removed on completion of the project. The security deposit is refundable on return of the backflow device in good operating condition. Depending on the availability of space, the Contractor may make arrangements to store materials at the City Corporation Yard.

**Section 16 Public Convenience, Safety and Traffic:**

The Contractor shall so conduct his operations in a manner which causes the least possible obstructions and inconvenience to the public in accessing the programs housed at the facilities at the site. The contractor shall provide temporary facilities to allow pedestrian accessibility around work areas as necessary.

All safety orders, rules and recommendations of the Division of Industrial Safety of the Department of Industrial Relations of the State of California applicable to the work to be done under the contract shall all be obeyed and enforced by the contractor.

All costs involved in respect to the above requirements will be considered as included in the prices bid for the various contract items of work and no additional compensation will be allowed.

**Section 17 Areas for Contractor's Use:**

The right of way shall be used only for purposes that are necessary to perform the required work. The Contractor shall not occupy areas other than those identified by the City Engineer or allow others to occupy such areas for purposes which are not necessary to perform the required work.

The Contractor shall remove all equipment, materials, and rubbish from the work areas, City-owned property and adjacent property on which work is to occur, and other areas which he/she occupies and shall leave the areas in a presentable condition in accordance with the provisions in Section 46, "Final Cleaning Up," of these Special Provisions.

The Contractor shall secure at his/her own expense any area required for storage of equipment or materials, layout or for other purposes if sufficient area is not available to him within the contract limits, or at the sites designated on the plans outside the contract limits.

**Section 18 Trees, Shrubs, Grass Areas, Etc.:**

Damage to trees and shrubs shall be avoided wherever possible. It shall be the Contractor's responsibility to replace, in kind, any irrigation, trees, shrubs or turf destroyed or damaged during construction.

Before construction, the City and Contractor shall walk the entire project and City shall take pictures of existing improvements as a record of as-is conditions.

Any existing improvements damaged or removed by the Contractor as a result of his operations shall be repaired or replaced. All costs involved in the protection and restoration of existing improvements shall be included in the prices bid for the various items of work.

**Section 19 Damage to Existing Improvements:**

Any existing improvements damaged or removed by the Contractor as a result of his operations shall be repaired or replaced. Any paving, building element, equipment, system or furnishing damaged or destroyed during the Contractor's operations shall be replaced in kind to the Engineer's satisfaction. All costs involved in the protection and restoration of existing improvements shall be included in the prices paid for the various items of work.

**Section 20: Order of Work:**

Order of work shall conform to the provisions in Section 5-1.05, "Order of Work," of the Standard Specifications and these Special Provisions.

Before beginning construction, a preconstruction meeting between the Contractor, Building Official, City Engineer, and City Inspector will be held.

Full compensation for conforming to the requirements of this section shall be considered as included in the contract prices paid for the various items of work and no additional compensation will be allowed.

**Section 21 Property Owner Notifications:**

The Contractor shall notify all property owners and entities/groups/organizations (government, non-government, or private) affected by the project work at least 48 hours before work is to begin. In addition, the Contractor shall notify property owner(s) and the City 72 hours before entering private property or interrupting any utility service. Notice requirements shall be reviewed and approved by the Engineer before being sent.

Any required shut down of the water system shall be performed by City Public Works forces. Contact the City Public Works Department at least 48 hours before requiring shut down of water mains.

**Section 22 Temporary Erosion Control:**

Temporary erosion control shall consist of, but not be limited to, constructing such facilities and taking such measures as are necessary to prevent, control and abate water, mud, and erosion damage to public and private property as a result of the construction of this project.

Conformance with the requirements of this section shall in no way relieve the Contractor from his responsibilities, as provided in Section 7-1.01G, "Water Pollution," Section 7-1.11, "Preservation of Property," and Section 7-1.12, "Responsibility for Damage," of the Standard Specifications.

Temporary erosion control features as are necessary to provide sediment control shall be constructed and functioning prior to October 15. The Contractor shall construct such supplementary temporary erosion control facilities as are necessary to protect adjacent private and public property.
Temporary erosion control measures shall conform to the current field manual of erosion and sediment control published by the California Regional Water Quality Control Board, San Francisco Bay Region and includes, but is not limited to the following:

(a) The Contractor shall conduct his operations in such a manner that storm runoff will be contained within the project or channeled into the storm drain system which serves the runoff area. Storm runoff from one area shall not be allowed to divert to another runoff area.

(b) Storm drain systems, toe of slope drains, and outlet structures shall be constructed and operating before commencing, or concurrently with placing, an embankment. Temporary down drains, drainage structures and other devices shall be provided to channel storm runoff water into the respective permanent storm drain systems during construction. Mud and silt shall be settled out of the storm runoff before said runoff enters the storm drain system.

(c) Excavation areas, while being brought to grade, shall be protected from erosion and the resulting siltation of downstream facilities and adjacent areas by the use of various temporary erosion control measures. These measures may include, but shall not be limited to: jute mesh; check dams; confined ponding areas to desilt the runoff; and protection, such as sand bags or straw bales around inlets which have not been brought up to grade.

(d) Contour graded areas shall be protected against erosion and the resulting siltation of downstream facilities and adjacent areas during grading operations. Various measures may include, but shall not be limited to the use of graded contour berms to control sheet flow: supplemental grading of large areas around temporary or unfinished inlet structures, such as inside ramp loops, to provide desilting basins; and temporary ditch paving.

Culvert pipe used in conjunction with temporary erosion control measures which was new when delivered to the project site and, in the opinion of the Engineer, is not damaged and whose dimensions and other properties conform to the requirements for new material may be used in the new work.

Full compensation for any cost involved in performing planned permanent water pollution control and erosion control to act as temporary water pollution control and temporary erosion control shall be considered as included in the contract prices paid for the various items of work involved and no additional compensation will be allowed.

**Section 23 Preservation of Property:**

Attention is directed to the provisions in Section 7-1.11, "Preservation of Property," of the Standard Specifications and these Special Provisions.

Existing trees, shrubs, turf and other plants, that are not to be removed and are injured or damaged by reason of the Contractor's operations, shall be replaced by the Contractor in accordance with the requirements in Section 20-4.07, "Replacement," of the Standard Specifications and the following:

The minimum size of tree replacement shall be 24-inch box and the minimum size of shrub replacement shall be 15-gallon. Replacement ground cover plants shall be from flats and shall be planted 12 inches on center.

Damaged or injured plants shall be removed and disposed of outside the street right of way in accordance with the provisions in Section 7-1.13 of the Standard Specifications. Storm drain easements and temporary construction easements are shown on the plans and shall be staked for location by the surveyors. Temporary easements may be used to move equipment and material and store material as required. The Contractor shall not disturb or remove trees, plant material or facilities located within the

confines of the temporary easement unless required by his operations. The Contractor's attention is directed to section entitled, "Final Clean-up," of these Special Provisions.

**Section 24 Progress Schedule:**

Progress schedules will be required for this contract and shall conform to the provisions in Section 8-1.04, "Progress Schedule," of the Standard Specifications.

**Section 25 Cooperation:**

Attention is directed to Sections 7-1.14, "Cooperation" and 8-1.10, "Utility and Non-Highway Facilities," of the Standard Specifications and these Special Provisions.

Other forces may be engaged in installing or in making adjustments to or in relocating various utility or other non-highway facilities throughout the project.

**Section 26 Safety:**

The Contractor is hereby specifically informed that under this contract he has the sole responsibility for the safety of his work, including his workman, equipment and that of subcontractors, and of the general public as they may come in contact with the work. The Engineer or Inspector has specifically **not** been hired to review the Contractor's safety or methods of operation.

At the end of each day, excavations shall be backfilled, plated with steel trench plates or barricaded and fenced.

**Section 27 Obstructions:**

Attention is directed to Sections 8-1.10, "Utility and Non-Highway Facilities," and Section 15 "Existing Highway Facilities," of the Standard Specifications and these Special Provisions.

Attention is directed to the existence of power, telephone, and cable television poles, underground gas lines, and underground water and sewer lines within the area in which construction is to be performed. The Contractor will be required to work around these facilities.

Prior to starting work, the Contractor shall (a minimum of 2 working days in advance) call Underground Service Alert (USA), toll free, at (800) 642-2444 and provide USA with all necessary data relative to the proposed work. USA will accept calls and process information to participating agencies that have underground facilities in the area between the hours of 7:30 a.m. and 5:00 p.m. daily, except Saturdays, Sundays, and holidays. Between the hours of 5:00 p.m. and 7:30 a.m. calls will be recorded and then processed after 7:30 a.m. For emergency situations, after hours and on Saturdays, Sundays and holidays, the Contractor shall contact the organization owning the affected facility. Upon notification, agencies having facilities in the area of the proposed excavation will mark their locations in the field using USA standard colors and codes to identify the facility.

The Contractor will be required to work around public utility facilities and other improvements that are to remain in place within the construction area, and he will be held liable to the owners of such facilities for interference with services resulting from his operations. The Contractor will be required to work around and coordinate with others where public utility facilities are being relocated.

**Section 28 Hours of Work:**

Construction work shall be limited to the hours between 7:00 a.m. and 6:00 p.m. Monday through Friday.

**Section 29 Construction Area Signs:**

Construction area signs shall be furnished, installed, maintained and removed when no longer required in accordance with the provisions in Section 12, "Construction Area Traffic Control Devices," of the Standard Specifications and these Special Provisions.

Construction area signs shall not be used until they are needed and when no longer needed they shall be removed from the site of the work.

The Contractor shall notify the Underground Service Alert (USA) in accordance with the section on "Obstructions" in these Special Provisions at least two working days, but no more than 14 calendar days, prior to commencing any excavation for construction area signposts.

All excavations required to install construction area signs shall be performed by hand methods without the use of power equipment, except that power equipment may be used if it is determined there are no utility facilities in the area of the proposed post holes.

Stationary mounted signs shall be erected on wood posts in the same manner specified for roadside signs and in accordance with the Caltrans Standard Plans.

No separate measurement or payment will be made for construction area signs. All costs associated with construction area signs shall be included in the lump sum contract price for the work and no additional compensation will be allowed.

**Section 30 Maintaining Traffic:**

Attention is directed to Section 7-1.08, "Public Convenience," Section 7-1.09, "Public Safety," and Section 12 "Construction Area Traffic Control Devices," of the Standard Specification. Nothing in these Special Provisions shall be constructed as relieving the Contractor from his responsibilities as provided in said Section 7-1.09.

The Contractor's equipment and materials may not be stored within City right-of-way. Construction shall be staged from a site procured by the Contractor at no expense to the City.

The Contractor shall notify the Engineer of his intent to begin work at least 5 days before work is begun. The Contractor shall cooperate with local authorities relative to handling traffic through the area.

When leaving a work area and entering a roadway carrying public traffic, the Contractor's equipment, whether empty or loaded, shall in all cases yield to public traffic.

Minor deviations from the requirements of this section concerning hours of work which do not significantly change the cost of the work may be permitted upon the written request of the Contractor if in the opinion of the Engineer public traffic will be better served and the work expedited. Such deviations shall not be adopted until the Engineer has indicated his written approval. All other modifications will be made by contract change order.

## PART IV

## SPECIFICATIONS


| SECTION | TITLE | PAGE |
|---|---|---|
| SECTION 10-1 | GENERAL | IV-3 |
| 10-1.01 | Order of Work | IV-3 |
| 10-1.02 | Relations with California Regional Water Quality Control Board | IV-3 |
| 10-1.03 | Progress Schedule | IV-4 |
| 10-1.04 | Cooperation | IV-4 |
| 10-1.05 | Safety | IV-4 |
| 10-1.06 | Obstructions | IV-4 |
| 10-1.07 | Hours of Work | IV-5 |
| 10-1.08 | Dust Control | IV-5 |
| 10-1.09 | Construction Area Signs | IV-5 |
| 10-1.14 | Clearing and Grubbing | IV-7 |
| 10-1.15 | Watering | IV-8 |
| SECTION 10-2 | TECHNICAL SPECIFICATIONS | IV-9 |
| 10-2.01 | Mobilization, Bonds & Insurance | IV-9 |
| 10-2.7 | Final Cleanup | IV-16 |
| 10-2.8 | Measurement and Payment | IV-16 |

## PART IV – SPECIFICATIONS

### SECTION 10-1 GENERAL

10-1.01 ORDER OF WORK: Order of work shall conform to the provisions in Section 5-1.05, "Order of Work," of the Standard Specifications and these Special Provisions.

The Contractor shall submit the following technical information prior to the pre-construction conference:

1. Emergency Contact Numbers for Prime and Subcontractors.
2. Proposed sequencing of work including closures of Men's and Women's dressing / shower rooms.
3. Temporary Pedestrian Accessibility Route (TPAR) plans specific to the areas within and affected by the Contractor's work.

Full compensation for conforming to the requirements of this section shall be considered as included in the contract prices paid for the various items of work and no additional compensation will be allowed.

10-1.02 RELATIONS WITH CALIFORNIA REGIONAL WATER QUALITY CONTROL BOARD: This location is within an area controlled by the Regional Water Quality Control Board. The Contractor shall fully inform himself of all rules, regulations, and conditions that may govern his operations in said area and shall conduct his work accordingly.

The Contractor shall comply with the regulations of the North Coast Regional Water Quality Board and the discharge prohibitions and guidelines pertaining to construction activities listed on pages 1-5-7 through 1-5-9 of the Water Quality Control Plan North Coastal Basin dated April, 1975.

The Contractor shall also conform to the requirements of Appendix A of this contract.

Full compensation for conforming to the requirements of this section shall be considered as included in the contract prices paid for the various items of work involved and no additional compensation will be allowed.

10-1.03 PROGRESS SCHEDULE: Progress schedules will be required for this contract and shall conform to the provisions in Section 8-1.04, "Progress Schedule," of the Standard Specifications.

The progress schedule shall identify refuse collection days. The schedule for slurry sealing shall include a makeup day to be included in posting no parking and notices to area residents such that all of the schedule work will be completed within the scheduled periods. Failure to complete schedule work which results in rescheduling, reposting no parking signs, and redistribution of notices to area residents, all of which shall be at the Contractor's expense and shall not be a basis for time extensions unless caused by unforeseen weather.

Requests for changes in the schedule must be submitted to the Engineer for approval at least 48 hours prior to slurry sealing the streets affected.

Full compensation for conforming to the requirements of this section shall be considered as included in the contract prices paid for the various items of work and no additional compensation will be allowed.

10-1.04 COOPERATION: Attention is directed to Sections 7-1.14, "Cooperation," and 8-1.10, "Utility and Non-Highway Facilities," of the Standard Specifications and these Special Provisions.

Other forces may be engaged in constructing improvements adjacent to the project. In some instances the Contractor may be required to coordinate work and share work areas with PG&E, SBC, Comcast and the City's other contractors. The Contractor shall cooperate at all times with utility agencies and other contractors in the vicinity of the project and as directed by the City.

Full compensation for conforming to the requirements of this section shall be considered as included in the contract prices paid for the various items of work and no additional compensation will be allowed.

10-1.05 SAFETY: The Contractor is hereby specifically informed that under this contract he has the sole responsibility for the safety of his work, including his workforce, equipment and that of subcontractors, and of the general public as they may come in contact with the work. The Engineer or Inspector has specifically not been hired to review the Contractor's safety or methods of operation.

10-1.06 OBSTRUCTIONS: Attention is directed to Sections 8-1.10, "Utility and Non-Highway Facilities," and Section 15 "Existing Highway Facilities," of the Standard Specifications and these Special Provisions.

Attention is directed to the existence of underground power, telephone, cable television, gas, water, sewer, streetlight conduits and irrigation lines within the area in which construction is to be performed. The Contractor will be required to work around these facilities as needed to perform work in accordance with the plans.

The Contractor will be required to work around public utility facilities and other improvements that are to remain in place within the construction area, or that are to be relocated and relocation operations have not been completed, and he will be held liable to the owners of such facilities or interference with services resulting from his operations.

Full compensation for conforming to the requirements of this section shall be considered as included in the contract prices paid for the various items of work and no additional compensation will be allowed.

10-1.07 HOURS OF WORK: Construction work shall be limited to the hours between 7:00 AM and 6:00 PM Monday through Friday. Except as stated below, no construction is permitted on Saturdays or Sundays. Your attention is directed to restrictions in the section entitled "Maintaining Traffic," located elsewhere in these specifications.

10-1.08 DUST CONTROL: Dust control shall conform to the provisions in Section 10, "Dust Control," of the Standard Specifications and these Special Provisions.

In lieu of the provisions of the second paragraph in Section 10-1.04, "Payment," no separate payment will be made to the Contractor when the Engineer orders the application of water for the purpose of controlling dust caused by public traffic only. Full compensation for such dust control will be considered as included in the prices paid for the various items of work involved, and no additional compensation will be allowed.

10-1.09 CONSTRUCTION AREA SIGNS: Comply with Part III – Section 29 of the special provisions. Construction area signs shall be paid as part of the bid item for Traffic Control. No separate payment will be made therefore.

10-1.14 CLEARING AND GRUBBING: Clearing and grubbing shall conform to the provisions in Section 16, "Clearing and Grubbing," of the Standard Specifications and these Special Provisions.

All existing vegetation, outside the areas to be cleared and grubbed, shall be protected from the Contractor's operations unless specifically shown on the plans to be removed.

Nothing herein shall be construed as relieving the Contractor of his responsibility for final cleanup of the work area as provided in Section 4-1.02, "Final Cleaning Up," of the Standard Specifications.

At various locations in the Pedestrian Path, tree roots have caused the asphalt surface to heave. The contractor shall remove the existing asphalt and hand-excavate around the tree roots to determine the depth and size of the roots. If the roots will be in the base section for the pedestrian path, the contractor shall cut the roots only at the direction of the Engineer. Remaining roots shall be covered with geotextile fabric extending the width of the path and two (2) feet either side of the root. Base rock shall be placed and compacted to 85% over the roots.

Compensation for clearing and grubbing, including work on existing tree roots, shall be included in the various items of work and no separate or additional compensation shall be made therefore.

10-1.15 WATERING: Watering shall conform to the provisions in Section 17, "Watering," of the Standard Specification.

The City will supply a hydrant meter for construction at one location at no cost to the Contractor. The location and rate of withdrawal will be subject to City approval.

Full compensation for developing a water supply shall be considered as included in the contract prices paid for the various items of work involved and no additional compensation will be allowed.

## SECTION 10-2 TECHNICAL SPECIFICATIONS

**10-2.01 MOBILIZATION, BONDS & INSURANCE:** Mobilization shall consist of preparatory work and operations, including but not limited to, those necessary for the movement of personnel, equipment, supplies, and incidentals to the project site; for the establishment of all offices, buildings, construction yards, sanitary facilities, and any other facilities necessary for work on the project; and for all other work and operations which must be performed or costs incurred prior to beginning work on the various contract items on the project site, as well as the related demobilization costs anticipated at the completion of the project. The cost of all bonds and insurance policies, including premiums and incidentals, shall be included in mobilization.

No additional compensation will be allowed for additional mobilizations required, including but not limited to, delays caused by the relocation of existing utility facilities shown on the plans or discovered during construction operations.

The deletion of work or the addition of extra work as provided for herein shall not affect the price paid for Mobilization.

Payment for "Mobilization, Bonds, & Insurance" will be made at the Contract Lump Sum price named in the Bid Schedule. Said price shall constitute full compensation for all such work. Payment for Mobilization will be made as follows:

70% of the bid item for Mobilization will be paid on the first progress payment.

100% of the bid item for Mobilization will be paid on the second progress payment, unless all the Mobilization items listed herein have not been completed, at which point payment will be withheld until all the items are completed.

**10-2.02 TRAFFIC CONTROL:** Construction area traffic control devices shall be installed and maintained in accordance with the applicable sections of these Special Provisions, the Standard Specifications, the current Edition of the California Manual on Uniform Traffic Control Devices (CAMUTCD), City Traffic Standards, and as directed by the Engineer.

**10-2.02a Traffic Control Plan:** Prior to commencing construction which will affect existing traffic, the Contractor shall submit for review by the Engineer, a Traffic Control Plan on an 11" x 17" sheet of paper which contains only information specifically related to work zone traffic control. If the Contractor proposes to use the current edition of the CAMUTCD published by Caltrans in lieu of a traffic control plan, in specific work operations, he/she shall submit in writing for consideration which Standard Plan will be used for each work operation. A Traffic

Control Plan or proposal shall be submitted for review at least two weeks prior to implementation.

The Traffic Control Plans shall contain a title block which contains the Contractor's name, address, phone number, project superintendent's name, contract name, dates and hours traffic control will be in effect, and a space for review acknowledgment.

The content of the Traffic Control Plan shall include, but is not limited to, the following:

A. Show location and limits of the work zone.

B. Indicate signing, cone placement, and other methods of delineation and reference to appropriate City or Caltrans Standards.

C. Show how pedestrian traffic will be handled through the construction site.

No work except for installation of project identification signs will be allowed to commence prior to approval of the Work Zone Traffic Control Plan.

**10-2.02b Pedestrian Traffic Control:** The Contractor is directed to Chapter 6D, Pedestrian and Worker Safety, in the CAMUTCD, the improvement plans and these Special Provisions.

Pedestrians shall be provided with a safe convenient and accessible path that, at a minimum, replicate the most desirable characteristics of the existing sidewalk, path or footpath. At no point along the road shall the sidewalks on both sides of the road be closed at the same time.

The Contractor shall construct and maintain temporary pedestrian pathways through the work zone, where required, that shall be in compliance with the requirements of the Americans with Disabilities Act (ADA), and the California MUTCD.

Pedestrian routes shall not be impacted for the purposes of any non-construction activities such as parking of vehicles or equipment, or stock piling of materials.

Pedestrians shall not be led into conflicts with work site vehicles, equipment or operations.

**10-2.02c. Payment:** The cost of providing **Traffic Control** will be will be included in the contract **lump sum** (LS) price for Pedestrian path. **Traffic Control** shall include full compensation for furnishing all labor, materials, tools and equipment, and doing all work involved in traffic control including, project and construction signs, pedestrian traffic control, warning signs, reflective delineators, temporary asphalt paths, and no additional allowance will be made therefor.

**10-2.03 AGGREGATE BASE:** Aggregate base shall be Class 2 conforming to and placed in accordance with the requirements of Section 26 of the City of Santa Rosa Construction Specifications, with the following modifications and additional requirements:

Compaction shall commence immediately after spreading of the damp material and before the material has dried sufficiently to allow separation between the fine and coarse particles. If the Engineer determines that the aggregate base has dried excessively before compaction can be achieved, the aggregate base shall be removed and replaced, or moisture conditioned prior to resumption of compaction effort at the Engineer's direction and the Contractor's expense.

**10-2.03a Quality Requirements:** The minimum sand equivalent shall be 31 for any individual test.

**10-2.03b Compacting:** The surface of the finished aggregate base shall be firm and unyielding. Any visible movement vertically or horizontally of the aggregate base under the action of construction equipment or other maximum legal axle loads shall be considered as evidence that the aggregate base does not meet this requirement.

**10-2.03c Payment:** Full compensation for Class 2 aggregate base shall be considered as included in the lump sum contract price paid for Pedestrian Path, and shall include all compensation for furnishing all labor, materials, tools and equipment, and doing all the work involved in furnishing and placing the base material as specified, including furnishing, hauling, and applying water as specified and directed by the Engineer.

**10-2.04 ASPHALT CONCRETE:** Placement of asphalt concrete surface and asphalt concrete base shall conform to the requirements of Section 39 of the Standard Specifications.

No longitudinal cold joints shall be left overnight except as approved by the Engineer.

Asphalt concrete base shall be placed in a manner that does not cause deformation to the ground surface or the adjacent pavement. The Contractor shall place asphalt concrete base the same day that an area is ground.

Temporary Asphalt Concrete tapers shall be placed along any vertical elevation change greater than 0.17' and maintained until removed as per the Engineer.

At the **end of each working day**, the exact location of all underground facility covers overlaid with asphalt concrete shall be clearly marked on the grade.

**10-2.04a Asphalts:** The amount of asphalt binder to be mixed with the aggregate will be specified by the Engineer at the time of paving. Different asphalt binder content may be specified for each lift and each location.

Liquid anti-stripping agent (LAS) shall be added to the asphalt binder at a rate of 0.5% by weight of asphalt binder. The LAS shall be AD-here LOF 65-00 or equivalent, and shall be stored, measured, and blended with the asphalt binder in accordance with the anti-stripping agent manufacturer's recommended practice. The LAS can be added at the asphalt plant or at the refinery. When added at the asphalt plant, the equipment shall indicate and record the amount of LAS added. If added at the refinery, the shipping ticket from the refinery shall certify the type and amount of LAS added.

**10-2.04b Aggregate:** The asphalt concrete mixture, for asphalt concrete surface and asphalt concrete base, shall conform to the following requirements:

Minimum tensile strength ratio (TSR) of 70, and a minimum dry tensile strength of 65 pounds per square inch, based on California Test Method 371.

At any time during the first 12 months from the time of placement of the asphalt concrete, the surface shall be visually inspected by the City. If signs of stripping of binder from aggregate or loss of aggregate is apparent, the City will core the asphalt concrete surface. The core samples shall be tested for TSR. Asphalt concrete with a TSR less than 70 shall be remediated as required by the City Engineer.

**10-2.04c Payment:** Full compensation for Asphalt Concrete shall be considered as included in the lump sum contract price paid for Pedestrian Path, which price shall include full compensation for furnishing all labor, materials, tools, and equipment, and doing all work involved in placing asphalt concrete surface, including mobilization, hauling, placing, compaction, grading, tack coat, rolling, sweeping, and no additional allowance will be made therefor.

Full compensation for installing and removing temporary asphalt ramps (tapers) shall be included in the contract price for asphalt concrete surfacing and no additional allowance will be made therefor.

**10-2.05 SUBGRADE STABILIZATION FABRIC:** Stabilization Fabric shall be installed at the locations where the subgrade is unstable as determined by the Engineer in the field.

The Contractor shall remove all loose dirt prior to the placement of the stabilization fabric.

Stabilization fabric shall be installed per manufacturer's recommendations and shall meet or exceed the following specifications:

| | |
|---|---|
| Grab Tensile Strength | 290 lb. |
| Mullin Burst Strength | 500 psi |

| | |
|---|---|
| Trapezoid Tear Strength | 120 lb. |
| Modulus (Load at 10% Elongation) | 120 lb. |
| Equivalent Opening Size | 40-70 Sieve |
| Water Permeability Coefficient (K) | 0.003 cm/sec. |

Stabilization fabric shall be Mirafi 600-X, Supac 6WS, Fibretex TEN-5, or equal, and shall be installed per manufacturer's recommendations.

Stabilization fabric shall be held in place with wooden or metal stakes driven through the fabric into the subgrade at the beginning, at the end, and at 50' intervals. A minimum of three stakes shall be placed at each interval. The stakes shall be a minimum length of 8" and shall be driven sufficiently to hold the fabric in place during the placement of the AC Base.

**10-2.05a Measurement and Payment:** Full compensation for Subgrade Stabilization Fabric shall be considered as included in the lump sum contract price paid for Pedestrian Path, which price shall include full compensation for labor, materials, tools, equipment, and doing all the work involved in furnishing and placing Stabilization Fabric as specified herein including wooden or metal stakes and no additional allowance will be made therefor.

**10-2.06 PAVEMENT GRINDING:** Pavement Grinding shall be done per details on Plans, these Special Provisions and as directed by the Engineer. Attention is directed to Section 124, "Material Recycling" of these Special Provisions. All pavement grinding shall be done not more than (3) days days prior to overlaying.

All grindings shall become the property of the contractor. None of the grindings shall be disposed of on the work site. Prior to disposal of any excess material from the work site, the contractor shall submit to the engineer written authorization for the disposal and entry permission signed by the owners of the disposal site. The Contractor shall comply with all disposal regulations, such as City, County, and or State permits and licenses as may be required.

**10-2.06a Payment:** Full compensation for Subgrade Stabilization Fabric shall be considered as included in the lump sum contract price paid for **Pedestrian Path,** which price shall include full compensation for furnishing all labor, materials, tools, and equipment, and doing all work involved in pavement grinding, removing, sweeping, and no additional allowance will be made therefor.

**10-2.07 SIGNS:** This work shall consist of furnishing and installing regulatory signs in accordance with these specifications, State Standards, and as shown on the plans or as directed by the engineer.

Temporary signs shall be provided until the installation of new signs is complete. New poles shall conform to the City Standards.

Attention is directed to Section 12 Traffic Control for sign requirements and payment for signs involved in traffic control during construction.

**10-2.07a Installation/Relocation:** Regulatory signs and hardware which are not to be mounted on traffic signal mastarms or poles shall be provided and installed by the Contractor at the locations shown on the plans per the details shown on the plans and City Standards.

All sign posts installed shall be new.

**10-2.07b Measurement and payment Install Signs and Posts** will be paid for at the contract price **each**, which price shall include full compensation for furnishing all labor, materials, tools and equipment and doing all work involved in furnishing and installing signs, sign posts, complete in place, and providing and installing temporary signs and posts as specified herein, and no additional compensation will be allowed therefor.

**10-2.08 CONCRETE PEDESTRIAN RAMP:** Portland cement concrete pedestrian ramps shall be constructed in conformance to the standard details and details shown on plans and at the locations shown on the plans and in accordance with the applicable provisions of the City of Sebastopol Standard Details and Specifications and these Special Provisions. Contractor shall be responsible for replacing all portland cement concrete surfaces damaged or destroyed by his operations at no additional cost to the City.

Lamp black shall be added to the concrete mix to match the color of the existing sidewalk surface. The amount of lamp black to be added to the mix shall be determined by the Engineer to a maximum of two pounds per cubic yard of concrete.

Portland cement concrete (PCC) pedestrian ramps shall be constructed in accordance with the details and at the locations shown on the plans similar to City Std-R3.1 and R3.2, and as directed by the Engineer.

All concrete which is to be removed from sidewalk and existing pedestrian ramps shall be removed to the nearest score mark or construction joint as directed by the Engineer unless otherwise noted on plans. The edge of existing concrete to remain shall be neat and free of defects. Saw cutting may be required to achieve this effect.

All soft or spongy material shall be removed and replaced with suitable material as required by the Engineer.

New sidewalk and pedestrian ramps shall be constructed within 3 days of demolition and shall be installed prior to the asphalt concrete.

All sidewalk subgrade shall be conditioned to min. 2% above optimum moisture and compacted to 90%.

Concrete sidewalk shall be cured in accordance with the requirements of Section 90-7 of the Standard Specifications except that the Contractor may substitute other than a pigmented sealer upon the approval in writing of such substituted sealer by the Engineer.

**10-2.08a Pedestrian Ramp Detectable Warning Surface**

Pedestrian ramp detectable warning surface shall consist of raised truncated domes constructed within pedestrian ramps in conformance with the details shown on the plans and these Special Provisions. The detectable warning surface shall be Armor-Tile, Yellow, or approved equal.

The finished surfaces of the detectable warning surface shall be free from blemishes. No cutting of the tiles will be allowed. Installation will be per manufacturer's instructions or as directed by the Engineer.

The manufacturer shall provide a written 5 year warranty for prefabricated detectable warning surfaces, guaranteeing replacement when there is defect in the dome shape, color fastness, sound-on-can acoustic quality, resilience, or attachment. The warranty period shall begin upon acceptance of the contract.

Full compensation for constructing and installing curb ramp detectable warning surfaces shall be considered as included in the contract price paid per square foot for pedestrian ramps and no separate payment will be made therefor.

**10-2.08b Payment:** **P.C.C. Sidewalk and Pedestrian Ramp** will be paid for at the contract lump sum price for the various bid items, for removal and replacement of sidewalk and pedestrian ramps **including detectable warning surface** at the specific locations shown on the plans, which price shall include full compensation for furnishing all labor, materials, tools, equipment, and doing all the work involved in removing and constructing new sidewalk and pedestrian ramps complete in place as specified herein, including, saw-cutting, removing and disposing of existing sidewalks and pedestrian ramps, excavation and backfill, pruning and removing tree roots, dispose of grindings, clearing brush as needed, furnishing and placing new sand cushion, forming and constructing pedestrian ramps, as necessary for conforms to asphalt path, expansion joint filler, constructing weakened plane joints, color additive, broomed finish, furnishing and applying curing materials, removing discoloring, furnishing and installing detectable warning surface, complete in place and no additional allowance will be made therefor.

**10-2.09 PAVEMENT MARKINGS:** Pavement Markings shall include all lines, markings and words shown on the drawings at the various locations.

Pavement Markings shall conform to the applicable provisions of Section 84 of the Standard Specifications, the City Standards, and these Special Provisions and shall be placed at the locations shown on the plans.

The Contractor shall remove all existing traffic striping and pavement marking in conflict with proposed improvements, as shown on the plans, and as directed by the Engineer, and shall be responsible for their proper disposal of the grindings away from site work. Removal of existing striping and marking shall not occur more than three days prior to the overlay of the street.

Permanent pavement markings shall be installed not more than 3 days after final asphalt concrete placement. Existing stripes and pavement markings to remain, which are damaged by the work shall be replaced at the Contractors expense. Patching is not acceptable in lieu of complete replacement.

**10-2.09a Materials:** Paint used for Pavement Markings shall conform with Section 84-2.02C of the Caltrans Standard Specifications. Installation shall conform to Section 84-2.03 of the Caltrans Standard Specifications.

**10-2.09b Payment: Pavement Markings:** Full compensation for Pavement Markings shall be included in the lump sum contract items where they occur, which price shall include full compensation for removing existing markings, and furnishing all pavement marking paint, labor, materials, tools, and equipment and doing all work involved in applying marking complete in place, and no additional allowance will be made therefor.

**10-2.10 PORTLAND CEMENT CONCRETE:** All concrete shall conform to Section 90 of the most recent version of the Standard Specifications, the City Specifications, the City Standards, the Plans and these Special Provisions.

Whenever in the City Standards, City Specifications, or these Special Provisions the term, "Class A concrete" is used, the following term shall be substituted therefor and shall be understood and interpreted to mean and refer to such substituted term as follows: For "Class A concrete", substitute "Minor Concrete" as defined in Section 90 of the Standard Specifications.

**10-2.10a Required Use of Mineral Admixtures:** Required use of mineral admixtures shall conform to the provisions of Section 90-4.08 of the most recent version of the Standard Specifications and these Special Provisions. Mineral Admixtures shall be a minimum of 25% by mass of the total amount of cementitious material to be used in the mix.

All concrete placed adjacent to existing concrete shall contain one (1) pound of lampblack per cubic yard.

**10-2.10b Payment:** Full payment for Portland cement concrete shall be considered as included in the contract prices paid for the concrete involved and no additional compensation will be allowed therefor.

**10-2.11 ADJUST MANHOLES TO GRADE:** Existing manholes located within the area of work shall be adjusted to conform to finished pavement grades in accordance with City Standards and these Special Provisions.

Prior to removal of an existing manhole frame, a platform shall be constructed in the manhole above the top of the sewer to prevent any dirt or debris from falling into the sewer. The platform shall remain in place until all work on the manhole has been completed and the asphalt concrete has been placed around the manhole. Prior to the removal of the platform from the manhole, all dirt and debris shall be removed.

All manhole frames and covers shall be adjusted to grade after placement of the finish course of asphalt concrete.

Trimming of taper sections will not be permitted.

All sections of the manhole grade rings shall be set in cement mortar the same day that the grade rings are placed. Permanent asphalt concrete paving (0.17') over cement mortar shall be installed by the end of the following work day. All new and existing grade adjustment joints extending down to and including the tapered cone to grade ring joint shall be smoothly plastered inside and out and sealed with an approved water seal.

The top of the completed manhole shall contain at least one 3-inch grade adjustment ring.

Existing grade adjustment rings removed in the adjustment of manhole frames shall become the property of the Contractor and if undamaged and thoroughly cleaned of mortar may be reused in the work. If not so used, they shall be disposed of away from the site of work at the expense of the Contractor.

The manhole cover frame shall be reinstalled to align with the opening in the grade adjustment rings. Any frames that are misaligned by more than ¼ inch shall be removed and reinstalled.

Contractor shall accurately locate and record the location of all manholes to be raised to grade and shall furnish the Engineer a copy of said record prior to starting construction.

**10-2.11a Payment:** Full Compensation for **Adjust Existing Manholes to Grade** will be included in the Lump Sum price for the Pedestrian path, which price shall include full compensation for furnishing all labor, materials, tools and equipment and doing all the work involved in adjusting manhole frames and covers, to grade as herein specified, including required

excavation and backfill, additional grade rings if required and furnishing location of manholes to be adjusted to grade, and no additional allowance will be made therefor.

**10-2.12 ADJUST EXISTING VALVE BOX TO GRADE:** Existing valve boxes, sanitary sewer cleanout frame and covers located within the area of work shall be adjusted to finished pavement grades in accordance with City of Sebastopol Standards and these Special Provisions. All valve boxes, sanitary sewer frame and covers shall meet current City Standards.

Contractor shall field verify and record the location of all valve covers and sanitary sewer cleanouts, located within the area of work, to be raised to grade and shall furnish the Engineer a copy of said record prior to starting construction.

All sections of valve boxes and grade rings shall be set in cement mortar the same day that the grade rings are placed. Asphalt concrete paving over cement mortar shall be installed by the end of the following calendar day.

After the pedestrian path has been paved, mark the locations of all water valve boxes in white paint before the close of that work day. Within 48 hours of paving, adjust all water valve boxes to grade.

All silt and debris shall be removed from valve boxes. This shall include all existing silt and debris plus any material accumulated during the Contractor's operation.

**10-2.12a Payment:** Full compensation for **Adjust Existing Valve Boxes and Cleanouts to Grade** will be included in the lump sum price for Pedestrian Path, which price shall include full compensation for furnishing all labor, materials, tools and equipment, and doing all the work involved in adjusting valve boxes to grade as herein specified, including:

- required excavation and backfill,
- additional grade rings if required,
- furnishing location of existing boxes and covers to be adjusted to grade,
- removing silt and debris,

and no additional allowance will be made therefor.

## APPENDIX A

## CITY OF SEBASTOPOL

General Guidelines for Construction Activities
Erosion and Sediment Control and
Minimization of Hazardous Materials Contact with Stormwater

General

1. The *Erosion and Sediment Control Field Manual, Third Edition, June 1999*, by the California Regional Water Quality Control Board, San Francisco Bay Region, forms the basis for these requirements, and is incorporated herein in its entirety. A copy of the *Field Manual* may be obtained from the California Environmental Protection Agency State Water Resources Control Board Water Quality home page, http://www.waterboards.ca.gov/stormwtr/training.html under "Publications Available".
2. The City shall periodically inspect the Contractor's work to ensure that work conforms to these erosion control guidelines and requirements.
3. For public projects, the City shall perform erosion control follow-up and maintenance and be responsible for post construction stormwater protection following completion of the project, in accord with the provisions of the *Field Manual* and the City's Storm Water Management Plan.
4. The Contractor shall conform to all of the requirements contained in the approved plans and these contract documents and specifications and any other documents referenced herein.

EROSION CONTROL

Contractor shall conform with the requirements contained in Part IV, Specifications, Section 02770, Soil Erosion Control, and these guidelines.

GENERAL PRACTICES TO MINIMIZE HAZARDOUS MATERIALS CONTACT WITH STORM WATER (to be used in conjunction with the *Field Manual*)

1. Scheduling: The key to keeping potentially hazardous construction materials (PHCM) out of storm water is to perform most of the construction (earthwork and foundation work) during the dry season. All erosion control facilities shall be in place by October 15, or before the first rains - which ever comes first. All PHCMs shall be covered with tarps and elevated off the ground if rain is predicted.
2. Chemical Storage: Chemicals shall be stored in their original containers or in well-labeled, sealed containers in designated areas.
3. Drainage: PHCMs shall not be transported, applied, or washed within areas which drain to the City Storm Drain System.
4. Construction Equipment and Vehicles - Maintenance
   a. Maintain all construction equipment to prevent oil or other fluid leaks.
   b. Use drip pans for any oil or fluid changes that are required for maintenance of equipment. Keep vehicles and equipment clean. Do not allow excessive build-up of oil and grease.

c. Use off-site repair shops as much as possible.

d. Always use secondary containment, such as a drain pans or drop cloths, to catch spills or leaks when removing or changing fluids.

e. Place stockpiled spill cleanup materials where they will be readily accessible. Regularly inspect on-site vehicles and equipment for leaks, and repair immediately. Check incoming vehicles and equipment (including delivery trucks, and employee and subcontractor vehicles) for leaking oil and fluids. Do not allow leaking vehicles or equipment on-site.

f. Segregate and recycle wastes, such as greases, used oil or oil filters, antifreeze, cleaning solutions, automotive batteries, and hydraulic and transmission fluids.

5. Construction Equipment and Vehicles – Fueling

a. Use off site fueling stations as much as possible.

b. If fueling must occur on-site, use designated areas, located away from drainage. Locate on-site fuel storage tanks over a retention area designed to hold the total tank volume.

c. Cover the retention area with an impervious material and install it in a manner to ensure that any spills will be contained in the retention area.

d. Discourage "topping-off" of fuel tanks, as it frequently leads to fuel spillage.

e. Always use secondary containment, such as a drain pans or drop cloths, when fueling to catch spills/leaks.

f. Place stockpiled spill cleanup materials where they will be readily accessible.

g. Avoid mobile fueling of mobile construction equipment around the site; transport the equipment to designated fueling areas.

6. Construction equipment and Vehicles – Washing

a. Use off-site commercial washing businesses as much as possible.

b. Washing vehicles and equipment outdoors or in areas where wash water flows onto paved surfaces or into drainage pathways can pollute storm water. If you wash a large number of vehicles or pieces of equipment, conduct this work at an off-site commercial facility.

c. Do not permit steam cleaning on-site. Steam cleaning can generate significant pollutant concentrations.

7. Construction Equipment and Vehicles – Storage

a. Locate vehicle and equipment storage, cleaning, and maintenance areas in designated, confined areas. These areas should be located away from significant drainage courses.

b. Direct any concentrated storm water run-on/runoff around storage and service areas. Minimize contact of storm water and run-on/runoff with stored equipment by raising equipment on pallets or other similar devices.

8. Toxic Materials: Through proper material use, waste disposal, and training of employees, the discharge of toxic pollutants can be prevented. Such methods include the following:

   a. Dispose of all wastes in accordance with Federal, State, and local regulations.

   b. Use the entire product before disposing of the container.

   c. Do not remove the container's original product label prior to disposal. It contains important safety and disposal information.

   d. Do not clean out brushes or paint containers on dirt or into streets, gutters, storm drains, or streams. "Paint out" brushes as much as possible. Rinse water-based paints to the sanitary sewer. Filter and reuse thinners and solvents. Dispose of excess oil-based paints and sludge as hazardous waste.

   e. Select and site designated hazardous waste storage areas.

   f. Store hazardous materials and wastes in covered containers and protect from vandalism. Place hazardous material and waste containers in secondary containment.

   g. Do not mix wastes. Mixing can cause chemical reactions, make recycling impossible, and complicate disposal.

   h. Recycle any useful material such as oil or water-based paint. Provide a summary of available recycling and disposal services.

   i. Make sure that toxic liquid wastes and chemicals are not disposed of in dumpsters designated for construction debris.

   j. Arrange for regular waste collection before containers overflow.

   k. Make sure that hazardous waste is collected, removed, and disposed of only at authorized disposal areas.

## GENERAL NOTES

1. ALL WORKMANSHIP, MATERIALS, AND CONSTRUCTION SHALL CONFORM TO THE LOCAL MUNICIPAL STANDARD PLANS, THE CONSTRUCTION SPECIFICATIONS FOR PUBLIC IMPROVEMENTS, THE SPECIAL PROVISIONS FOR THIS PROJECT, AND THE STATE STANDARD SPECIFICATIONS AND STANDARD PLANS. DRIVEWAYS, PAVEMENT, AND APRONS SHALL BE PROVIDED CONFORMING TO THE CIVIL ENGINEERING DRAWINGS BUT IN NO INSTANCE LESS THAN THAT REQUIRED BY CALTRANS SPECIFICATIONS AND STANDARDS.
2. THE CONTRACTOR SHALL OBTAIN AN ENCROACHMENT PERMIT PRIOR TO BEGINNING ANY WORK ON ANY MUNICIPAL OR OTHER UTILITY OR ANY CITY ROADWAY OR RIGHT-OF-WAY FROM EACH RESPECTIVE UTILITY AND AGENCY WITHIN THE MUNICIPAL JURISDICTION.
3. THE CONTRACTOR SHALL NOT BEGIN EXCAVATION UNTIL ALL EXISTING UTILITIES HAVE BEEN MARKED IN THE FIELD. THE CONTRACTOR SHALL NOTIFY USA (1-800-642-2444) AT LEAST 48 HOURS BEFORE STARTING ANY WORK.
4. DISPOSAL OF ANY EXCAVATED MATERIAL ON PRIVATE PROPERTY WITHIN THE JURISDICTION REQUIRES A GRADING PERMIT FROM THE CITY BUILDING DIVISION. ALL EXCAVATED MATERIAL SHALL BECOME PROPERTY OF THE CONTRACTOR. PERMITS MUST BE OBTAINED PRIOR TO THE COMMENCEMENT OF WORK. EXCESS AND UNSUITABLE MATERIAL SHALL BE REMOVED TO A SITE APPROVED BY ALL AGENCIES HAVING JURISDICTION.
5. ALL EQUIPMENT SHALL HAVE APPROPRIATE NOISE SUPPRESSION DEVICES (MUFFLERS) IN PLACE AND FUNCTIONING AT ALL TIMES. ANY EQUIPMENT NOT ACTIVELY IN USE SHALL BE SHUT DOWN IMMEDIATELY.
6. ANY DAMAGES TO MUNICIPAL OR OTHER UTILITIES CAUSED BY PROJECT OPERATIONS SHALL BE THE CONTRACTOR'S RESPONSIBILITY.
7. THE CONTRACTOR SHALL OBTAIN A TRENCH SAFETY PERMIT FROM THE CALIFORNIA DIVISION OF INDUSTRIAL SAFETY PRIOR TO EXCAVATION OF ANY TRENCH GREATER THAN 5-FEET DEEP.
8. THE CONTRACTOR SHALL BE SOLELY RESPONSIBLE FOR REPAIRING OR REPLACING TO THE FULL SATISFACTION OF THE CITY (UTILITY AND MUNICIPALITY) OF ANY DAMAGE OR DETERIORATION OCCURRING TO EXISTING PRIVATE PROPERTY, ON AND OFF SITE IMPROVEMENTS, PUBLIC OR OTHER UTILITY IMPROVEMENTS AS A RESULT OF CONSTRUCTION ACTIVITY (GRADING, EXCAVATION, CONSTRUCTION, UTILITY INSTALLATION, ETC.). REQUIRED REPAIR OR REPLACEMENT MAY INVOLVE, WITHOUT LIMITATION, GRADING, PATCHING, SEALING OR OVERLAYING AFFECTED AREAS AS APPROPRIATED TO RETURN UTILITIES, ROADS, PAVED AREAS, IMPROVEMENTS AND LANDSCAPING TO AT LEAST AS GOOD A CONDITION AS THEY WERE IN PRIOR TO CONSTRUCTION. DETERMINATION OF ADEQUACY AND SUFFICIENCY OF REPAIRS AND REPLACEMENT SHALL BE BY THE CITY AND SHALL BE TIMELY ACCOMPLISHED TO THE SATISFACTION OF THE CITY. REPAIRS MUST BE MADE ACCORDING TO WRITTEN APPROVALS ACQUIRED FROM THE AFFECTED PARTIES BY THE CONTRACTOR IN ADVANCE OF REPAIR AND REPLACEMENT WORK. IF THE CONTRACTOR DOES NOT ACT PRUDENTLY IN A TIMELY MANNER, THE RESPECTIVE UTILITY OR CITY MAY UNDERTAKE THE REPLACEMENT OR REPAIR AND CHARGE THE CONTRACTOR FOR SAME.
9. ALL LANDSCAPING AND IRRIGATION SYSTEMS OR OTHER IMPROVEMENTS DISTURBED BY THE CONTRACTOR SHALL BE REPAIRED OR REPLACED IN KIND OR AS DIRECTED BY THE CITY'S REPRESENTATIVE, ENGINEER OR ARCHITECT.
10. EXISTING SHRUBBERY OR TREES SHALL BE REMOVED <u>ONLY</u> AS DIRECTED BY THE CITY'S AUTHORIZED REPRESENTATIVE.
11. ALL TRAFFIC CONTROL (SIGNS, PAVEMENT MARKINGS, WARNING DEVICES, STREET LIGHTING, ETC.) SHALL BE IN ACCORDANCE WITH THE LATEST EDITION OF THE CALIFORNIA DEPARTMENT OF TRANSPORTATION AND CALIFORNIA MANUAL OF TRAFFIC CONTROL DEVICES (CMUTCD) FOR CONSTRUCTION AND MAINTENANCE OF WORK ZONES. ALL SIGNS SHALL BE APPROPRIATELY CONSTRUCTED WITH REFLECTIVE MATERIAL ON A BACKING OF METAL OR FABRIC (NO WOOD OR PLASTIC ALLOWED) AND SHALL BE MAINTAINED THROUGHOUT CONSTRUCTION TO PROVIDE PROPER VISIBILITY.
12. NOT USED.
13. OVERHEAD UTILITY SERVICE DROPS ARE NOT NECESSARILY SHOWN ON THE PLANS. THE CONTRACTOR SHALL INVESTIGATE THE SITE AND BE AWARE OF LIMITED OVERHEAD CLEARANCES AND SHALL PROTECT ALL SERVICES TO REMAIN.
14. THE CONSTRUCTION CONTRACTOR AGREES THAT IN ACCORDANCE WITH GENERALLY ACCEPTED CONSTRUCTION PRACTICES, CONSTRUCTION CONTRACTOR WILL BE REQUIRED TO ASSUME SOLE AND COMPLETE RESPONSIBILITY FOR JOB SITE CONDITIONS DURING THE COURSE OF CONSTRUCTION OF THE PROJECT, INCLUDING SAFETY OF ALL PERSONS AND PROPERTY; THAT THIS REQUIREMENT SHALL BE MADE TO APPLY CONTINUOUSLY AND NOT BE LIMITED TO NORMAL WORKING HOURS AND CONSTRUCTION CONTRACTOR FURTHER AGREES TO DEFEND, INDEMNIFY AND HOLD DESIGN PROFESSIONAL AND THE JURISDICTION HARMLESS FOR ANY AND ALL LIABILITY, REAL OR ALLEGED, IN CONNECTION WITH THE PERFORMANCE OF WORK ON THIS PROJECT.
15. LOCATIONS OF THE UNDERGROUND OBSTRUCTIONS WHEN SHOWN ON THE PLANS ARE APPROXIMATE DIAGRAMMATIC REPRESENTATIONS ONLY AND SHOULD NOT BE TAKEN AS ACCURATE, COMPLETE, FINAL OR ALL INCLUSIVE. THE CONTRACTOR IS CAUTIONED THAT THE PLANS MAY NOT ACCURATELY INDICATE, SHOW OR INCLUDE ALL EXISTING UTILITIES. THE CITY JURISDICTION, THE ARCHITECT AND THE ENGINEER ASSUME NO RESPONSIBILITY FOR OBSTRUCTIONS, CHANGED CONDITIONS, OR UTILITIES THAT MAY BE ENCOUNTERED.
16. UNAUTHORIZED CHANGES AND USES: THE DESIGN PROFESSIONALS PREPARING THESE PLANS WILL NOT BE RESPONSIBLE OR LIABLE FOR UNAUTHORIZED CHANGES TO OR USES OF THESE PLANS. ALL CHANGES TO THESE PLANS MUST BE IN WRITING AND APPROVED IN WRITING BY THE PREPARER OF THESE PLANS <u>AND</u> ALL JURISDICTIONAL AGENCIES AFFECTED.
17. MAINTAIN ACCESSIBILITY TO ALL LOCATIONS TO REMAIN OPEN TO AND USEABLE BY THE PUBLIC. COMPLY WITH ALL APPLICABLE CONSTRUCTION RELATED ACCESSIBILITY STANDARDS. PROVIDE BARRICADES AND DIRECTIONAL SIGNS AS NECESSARY TO MAINTAIN PATH OF TRAVEL AND FACILITY ACCESSIBILITY.
18. CONTRACTOR TO SCHEDULE, CONDUCT AND COMPLETE CONSTRUCTION OPERATIONS SO AS TO MINIMIZE TO THE GREATEST EXTENT FEASIBLE ALL CITY PROGRAM DISRUPTIONS, NEGATIVE IMPACTS ON STAFF, CUSTOMERS AND THE PUBLIC AND INTERRUPTIONS TO UTILITIES AND ACCESS. CONTRACTOR SHALL NOT OBSTRUCT OR HINDER EMERGENCY VEHICLE AND EMERGENCY PERSONNEL ACCESS TO THE FACILITY AT ANY TIME.

## PUBLIC ACCESS

1. PUBLIC ACCESS TO PUBLIC FACILITIES AND PROGRAM SPACES SHALL REMAIN ALONG WITH PUBLIC ACCESS TO ON-SITE ACCESSIBLE PARKING AND PUBLIC RIGHT-OF-WAY SIDEWALKS. SUCH ACCESS SHALL NOT BE UNREASONABLY IMPEDED BY CONSTRUCTION ACTIVITIES WITHIN THE SCOPE OF THIS PROJECT AND SHALL BE SEQUENCED AND SCHEDULED TO PROVIDE, TO THE MAXIMUM EXTENT FEASIBLE, CONSISTENT WITH PUBLIC SAFETY, REASONABLY CONTINUOUS ACCESS. TEMPORARY LIMITED CLOSURE MAY BE ALLOWED SUBJECT TO CITY'S AUTHORIZED REPRESENTATIVE APPROVAL OF CONTRACTOR'S WRITTEN SCHEDULE / REQUEST TIMELY SUBMITTED A MINIMUM OF 14 DAYS IN ADVANCE. CONTRACTORS SHALL VERIFY LIMITS OF CONSTRUCTION ACTIVITIES TO AREAS APPROVED IN WRITING IN ADVANCE BY CITY'S AUTHORIZED REPRESENTATIVE FOR SUCH USES BY CONTRACTOR FOR WORK, INCLUDING, WITHOUT LIMITATION, DELIVERY OF MATERIALS, STAGING, LAYDOWN, STORAGE, DEBRIS BOX, SANITARY FACILITIES, AND CONTRACTOR'S DESIGNATED PARKING. CONTRACTOR SHALL COORDINATE WITH CITY THE POSTING OF SIGNS DESIGNATING THE LOCATION OF ALTERNATE ACCESSIBLE FACILITIES TEMPORARILY IMPACTED BY CONSTRUCTION ACTIVITIES WITHIN THE SCOPE OF THIS PROJECT.
2. CONTRACTOR SHALL PROVIDE TEMPORARY CONSTRUCTION FENCING BARRICADES AND OTHER PUBLIC SAFETY DEVICES TO MAINTAIN SUFFICIENT PUBLIC SAFETY AND SECURITY AT THE SITE OF THE WORK.
3. CITY TO SUPPLY AND CONTRACTOR TO POST TEMPORARY SIGNAGE INDICATING TEMPORARY ACCESS CLOSURE AND LOCATION OF ALTERNATE PROVISIONS FOR ACCESS.
4. CONTRACTOR TO SEQUENCE OPERATIONS SUCH THAT AT LEAST ONE ACCESSIBLE PARKING SPACE AND ONE TEMPORARY (OR PERMANENT) ACCESSIBLE PATH OF TRAVEL IS AVAILABLE TO THE PUBLIC FOR THE DURATION OF THE PROJECT. CONTRACTOR MAY SUBMIT WRITTEN REQUESTS FOR INTERMITTENT AND TEMPORARY CLOSURE (24 HOUR IN DURATION) SUBJECT TO CITY'S AUTHORIZED REPRESENTATIVE WRITTEN APPROVAL.

Aug 31, 2016 - 7:22am cwilliams C:\Documents and Settings\cwilliams\Desktop\CLIENTS\SEBASTOPOL CITY\IVES\CD-A1.0.DWG

## CODE ANALYSIS

<u>NOTE:</u> EXISTING SURFACE SLOPE CHARACTERISTICS OF THE EXISTING PAVEMENTS EXHIBITED WITHIN THE AREAS DESIGNATED FOR ACCESSIBLE PARKING AND PASSENGER LOADING AISLES HAVE BEEN RECORDED TO EXCEED 2.0% IN SOME LOCATIONS. THE CORRECTION OF THE OVER SLOPE CONDITION IS INCLUDED IN THIS PROJECT AND SHALL BE COORDINATED WITH THE PAVING WORK TO RESULT IN A FULLY ACCESSIBLE CONDITION. CONTRACTOR SHALL, TO APPROPRIATE EXTENT EMPLOY GRINDING / MILLING / CUTTING AND PATCHING / REPAVING IN ANY COMBINATION TO THE EXTENT NECESSARY TO ACCOMPLISH THESE GOALS. MEANS AND METHODS ARE THOSE DETERMINED BY THE CONTRACTOR. VERIFY AND OBTAIN CITY'S AUTHORIZED REPRESENTATIVE APPROVAL PRIOR TO COMMENCING WORK IN AFFECTED AREAS.

SURFACE OF PARKING AREA AND PASSENGER ACCESS AISLE SHALL NOT EXCEED 1.5% IN ANY DIRECTION PER CBC 11B-302 AND 11B-502.4 [ UP TO 1:48 / 2% IS PERMISSIBLE ]. GRIND PARKING AND PASSENGER LOADING AISLE SURFACES AND / OR CUT AND PATCH AC TOPPING PAVEMENT TO ACCOMPLISH COMPLIANCE. FEATHER AC PAVEMENT BEYOND AREAS COMPRISING THE ACCESSIBLE PARKING STALL AND PASSENGER LOADING AREA SUCH THAT A SMOOTH AND FLUSH CONFORMING TRANSITION OCCURS TO ADJACENT AC PAVEMENT. COORDINATE SURFACE WATER AND STORM WATER RUNOFF SUCH THAT NO STANDING WATER ACCUMULATES AND THAT SURFACE FLOWS ARE DIRECTED TOWARD (E) DRAINAGE WAYS AND DRAINAGE STRUCTURES TO REMAIN AND TO EFFECTIVELY AND PROPERLY MANAGE STORM WATER RUNOFF IN ALL AFFECTED AREAS.

<u>NOTE: LOCAL AHJ DOES NOT REVIEW OR INSPECT FOR FEDERAL ADA STANDARDS COMPLIANCE. HOWEVER, CONTRACTOR IS RESPONSIBLE TO ENSURE CONFORMANCE WITH THE STRICTEST PROVISIONS OF BOTH STATE AND FEDERAL ADA STANDARDS AND STATE CBC CODES.</u>

<u>NOTE:</u> EXISTING SURFACE SLOPE CHARACTERISTICS OF THE EXISTING PAVED WALKING SURFACES EXHIBITED WITHIN AND LEADING TO THE SITE HAVE BEEN NOTED TO HAVE CROSS SLOPES EXCEEDING 2.0% IN SOME LOCATIONS AND RUNNING SLOPES IN EXCESS OF 5.0%. THE CORRECTION OF THESE EXCESSIVE SLOPE CONDITIONS IS INCLUDED IN THIS PROJECT. TO THE MAXIMUM EXTENT FEASIBLE, CONTRACTOR SHALL, TO APPROPRIATE EXTENT, EMPLOY METHODS SUCH AS GRINDING OF ABRUPT CHANGES IN LEVEL EXCEEDING 1/4", THE FILLING OF GAPS 1/2" AND GREATER WITH APPROPRIATE FILLER COMPOUNDS OR GROUT TO MAKE PAVED SURFACES TO REMAIN FIRM, SMOOTH, FLUSH AND SLIP RESIUSTANT. PATCHING / REPAVING IN ANY COMBINATION SHALL BE USED TO THE EXTENT NECESSARY TO ACCOMPLISH AN ACCESSIBLE A PATH OF TRAVEL TO THE FULLEST EXTENT POSSIBLE. ALL TRIPPING HAZARDS DUE TO ABRUPT CHANGES IN LEVEL OVER 1/4" AND THE FILLING OF GAPS IN PAVED WALKING SURFACES IN EXCESS OF 1/2" ARE INCLUDED IN THE SCOPE OF THE WORK CONTEMPLATED IN THIS PROJECT. LOCATIONS AND EXTENT OF WHERE SUCH AFOREMENTIONED CONDITIONS OCCUR ARE NOT NECESSARILY SHOWN - CONTRACTORSHALL IDENTIFY SUCH LOCATIONS IN THE FIELD AND USE MEANS AND METHODS NECESSARY TO REMEDIATE TO RESULIN COMPLIANCE WITH APPLICABLE ACCESSIBILITY STANDARDS. SEE CONCRETE REPAIR NOTES SHEET T0.8 FOR ADDITIONAL REQUIREMENTS.

## ACCESSIBLE ROUTES

1. SLOPE IN PREDOMINANT PATH OF TRAVEL SHALL BE 4.5% MAX. SLOPES EXCEEDING 5.0% MUST COMPLY WITH REQUIREMENTS FOR RAMPS. CROSS SLOPE 1.5% MAX. SLOPES EXCEEDING 2.083% <u>NOT</u> PERMISSIBLE.
2. RESTING/PASSING SPACES OF 60"x60" MIN W/ 1.5% MAX SLOPE IN ANY DIRECTION SHALL BE PROVIDED AT 400 FT MAX INTERVALS. PASSING SPACE OF 60"x60" MUST BE PROVIDED WITHIN 200 FT (MAY HAVE RUNNING SLOPE OF 4.5% MAX AND CROSS SLOPE OF 1.5% MAX
3. WALKS SHALL BE FIRM STABLE AND SLIP RESISTANT. MEDIUM BROOM FINISH, TYPICAL, U.O.N.
4. SLOPE TO DRAIN WATER TOWARDS (E) DRAINAGE WAYS OR DRAINAGE STRUCTURES. STANDING WATER NOT ALLOWED.
5. AT INTERSECTIONS AND CHANGES IN DIRECTION GREATER THAN 30° PROVIDE A LEVEL "T" SHAPED OR 60" MIN CIRCULAR TURNING SPACE (AS SHOWN) WITH A SLOPE WITHIN HATCHED AREA LIMITED TO 1.5% MAX IN ANY DIRECTION.
6. "T" INTERSECTION AND 60"x60" SPACES AT TURNS MAY BE USED TO SATISFY RESTING AND TURNING SPACE REQUIREMENTS (ABOVE).
7. NO ABRUPT VERTICAL CHANGES IN LEVEL ARE ALLOWED. LEVEL CHANGES MAY BE 1/2" IF SLOPED AT 2:h TO 1:v. AT (E) WALKS TO REMAIN, GRIND (E) CONDITIONS AS NECESSARY TO COMPLY. GROUND SURFACES SHALL HAVE A COEFFICIENT OF FRICTION OF NOT LESS THAN 0.8. VERTICAL CHANGES MORE THAN 1/2" MUST COMPLY WITH REQUIREMENTS FOR RAMPS.
8. WALKWAY WARPS SHALL BE PROVIDED TO PROVIDE ADEQUATE DRAINAGE AND TO RESULT IN FLUSH - CONFORMING FINISHED SURFACES AND AS NECESSARY FOR SMOOTH TRANSITIONS AT ALL ADJACENCIES AND INTERSECTIONS. SUCH WARPS SHALL NOT EXCEED SLOPE REQUIREMENTS FOR ACCESSIBILITY. ABRUPT CHANGES IN LEVEL NOT ALLOWED.
9. WHERE WALKS ADJOIN AN ELEMENT SUCH AS REFUSE OR RECYCLING RECEPTACLE, DRINKING FOUNTAIN, BULLETIN BOARD, ETC. PROVIDE A MINIMUM OF 30" x 48" LEVEL WHEELCHAIR RESTING SPACE CENTERED ON EACH ELEMENT. WHERE SUCH ELEMENT(S) OCCUR, PROVIDE ADJACENT OR OVERLAPPING 60"x60" PASSING / MANEUVERING SPACE. WHERE A BENCH IS PROVIDED A LEVEL 30"x48" MIN WHEELCHAIR SPACE SHALL ADJOIN AT LEAST ONE END OF AT LEAST (1) BUT NOT LESS THAN 5% OF ALL BENCHES.
10. SEE ADDITIONAL PATH OF TRAVEL AND WALKWAY NOTES SHEETS T0.2, T0.4, AND T0.5

## GENERAL SHEET NOTES

1. ALL WORK SHALL CONFORM TO THE AMERICANS WITH DISABILITIES ACT (2010 ADAS) AND 2013 CALIFORNIA ACCESSIBILITY STANDARDS WITH ADOPTED AMENDMENTS, CBC TITLE 24, C.C.R. WITH THE MOST STRINGENT REGULATION GOVERNING THE WORK. THIS PROJECT INCLUDES, WITHOUT LIMITATION, ACCESSIBLE PARKING, PORTIONS OF ACCESSIBLE PATHS OF TRAVEL AT WALKWAYS AND AT SELECT DOOR ENTRY LANDINGS, SIGNS AND WAYFINDING. THE CONTRACTOR SHALL PROVIDE FOR CONTINUOUS COMPLIANCE W/ ACCESSIBILITY FOR AREAS AND BUILDINGS TO REMAIN OPERATIONAL DURING THE COURSE OF WORK. THE CONTRACTOR SHALL VERIFY THAT THE COMPLETED WORK COMPLIES IN EVERY REGARD TO THE MOST STRINGENT REQUIREMENTS OF ALL APPLICABLE STATE AND FEDERAL CONSTRUCTION-RELATED ACCESSIBILITY STANDARDS.

   NOTE: CERTAIN AREAS AND WALKS AT THIS SITE HAVE BEEN EXCLUDED FROM THE SCOPE OF WORK IN THIS CONTRACT. THE AREAS NOT IN CONTRACT HAVE BEEN OBSERVED TO EXHIBIT ELEMENTS OR CONDITIONS NOT NECESSARILY IN FULL COMPLIANCE WITH ACCESSIBILITY STANDARDS. SUCH ISSUES ARE BEING ADDRESSED IN A REASONABLY TIMELY MANNER CONSISTENT WITH THE ENTITY'S ADA OBLIGATIONS AND WILL BE INCLUDED IN REMEDIATION WORK SCHEDULED IN THE FUTURE.
2. WHERE A DISCREPANCY OCCURS BETWEEN THESE NOTES OR PROJECT SPECIFICATIONS AND ANY APPLICABLE OR REFERENCED STANDARDS INCLUDING ALL APPLICABLE CODES AND REGULATIONS, THE MOST STRINGENT SHALL APPLY. DO NOT CONTINUE WITH ANY AFFECTED WORK UNLESS AND UNTIL RESOLVING SUCH DISCREPANCY TO THE SATISFACTION OF THE OWNER, ARCHITECT AND AHJ.
3. (N) ACCESSIBLE PARKING SPACES SHALL, UPON COMPLETION, BE REVIEWED BY THE CONTRACTOR ON SITE AND BE VERIFIED FOR COMPLIANCE WITH SECTION 11B-502, 2013 CBC. PROVISIONS HAVE BEEN INCLUDED IN THESE DOCUMENTS INDICATING REQUIREMENTS FOR ACCESSIBILITY AT (N) LOCATIONS FOR DESIGNATED ACCESSIBLE PARKING.
4. NEW SITE WALKWAYS AS INDICATED ON PLAN SHALL PROVIDE A BARRIER FREE PATH OF TRAVEL FOR PERSONS WITH DISABILITIES. WALK SURFACES SHALL BE CONSTRUCTED TO 48" MINIMUM UNOBSTRUCTED WIDTH WITH SLIP RESISTANT SURFACE PER PER 2013 CBC SECTION 11B-302. CROSS SLOPE SHALL NOT EXCEED (1:50) (2%) NOR EXCEED 1:20 (5%) IN DIRECTION OF TRAVEL. WALK SLOPES EXCEEDING 1:20 (5%) SHALL BE CONSTRUCTED TO CONFORM TO RAMP REQUIREMENTS. WALKS ADJOINING DRIVEWAYS AND VEHICULAR AREAS MAY HAVE A RUNNING SLOPE UP TO BUT NOT EXCEEDING THE SLOPE OF THE VEHICULAR AREA. TOP AND BOTTOM LANDINGS AT CURB RAMPS SHALL HAVE NO SLOPES EXCEEDING 2% IN ANY DIRECTION. THERE SHALL BE NO ABRUPT CHANGES IN LEVEL OVER 1/4" OR 1/2" WITH BEVEL OF 1:2 SLOPE (1V:2H) PER 2013 CBC SECTIONS 11B-303 AND 11B-305.
5. CONTRACTOR IS RESPONSIBLE FOR COORDINATING WORK TO COMPLY WITH THE MOST STRINGENT STATE AND FEDERAL CONSTRUCTION RELATED ACCESSIBILITY STANDARDS
6. ALL (N) OR RESURFACED PAVED AREAS ARE TO SLOPE A MINIMUM OF 1%. WALKWAYS ARE TO SLOPE AT A MAXIMUM OF 5% IN THE PREDOMINANT DIRECTION OF PEDESTRIAN TRAVEL, WITH A CONSTRUCTION PROJECT MAXIMUM CROSS SLOPE OF 1.5% (2% IS MAXIMUM PERMISSIBLE PER CODE). ACCESSIBLE CURB RAMPS AND PEDESTRIAN RAMPS ARE TO CONFORM TO THE SPECIFIC DETAILS WHICH DESCRIBE THEM AND AS INDICATED PER PLAN. ANY AREAS ON THE SITE NOT CONFORMING TO THESE BASIC RULES AND REQUIREMENTS DUE TO EXISTING CONDITIONS OR DISCREPANCIES IN THE DOCUMENTS ARE TO BE PROMPTLY REPORTED TO THE ARCHITECT / OWNER PRIOR TO PROCEEDING WITH FORM WORK FOR CURBS AND / OR FLATWORK IN AFFECTED AREAS.
7. CONTRACTOR SHALL DETERMINE FLATWORK QUANTITIES BASED ON FIELD VERIFICATION AND THE PROPOSED SURFACE GRADES AND BASE THE BID ACCORDINGLY. ANY DIFFERENCES BETWEEN THE STATE IN WHICH THE PROJECT SITE IS DELIVERED TO THE CONTRACTOR AND THESE DOCUMENTS SHALL BE NOTED TO THE OWNER PRIOR TO SUBMITTING BID.

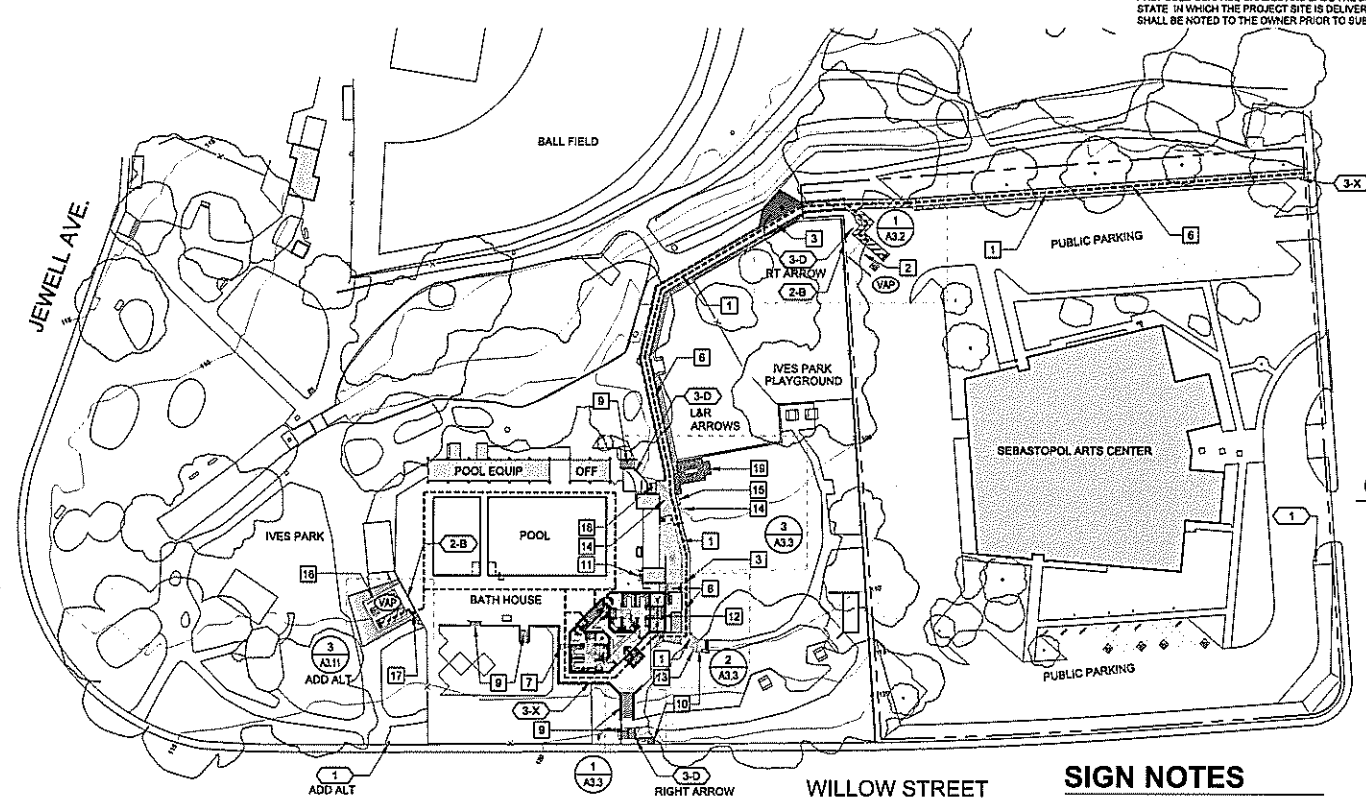


## 1 REFERENCE SITE PLAN

1" = 8'-0"

## PLAN LEGEND

- (N) CONCRETE FLATWORK. FOR CONCRETE SUBJECT TO VEHICULAR LOADS SEE DETAIL .
- ACCESSIBLE ENTRANCE
- ACCESSIBLE PEDESTRIAN PATH OF TRAVEL SEE NOTES THIS SHEET SEE DETAIL 20/A1.3
- (VAP) (N) VAN ACCESSIBLE PARKING

## CODE REFERENCES

CBC CHAPTER 11B
ALTERATIONS - 11B-202.3, 11B-202.4
PROTRUDING OBJECTS -11B-204
ACCESSIBLE ROUTES - 11B-206
ACCESSIBLE PARKING - 11B-208, 11B-502
GROUND SURFACE - 11B-302
OPENINGS - 11B-302.4
CHANGES IN LEVEL - 11B-303
ACCESSIBLE ROUTES- 11B-402
WALKING SURFACES - 11B-403
DETECTABLE WARNINGS - 11B-406, 11B-705,1.2.2

## ACCESSIBILITY NOTES

1. ALL WORK SHALL CONFORM TO THE 2010 AMERICANS WITH DISABILITIES ACT AND 2013 CALIFORNIA ACCESSIBILITY STANDARDS WITH ADOPTED AMENDMENTS, CBC TITLE 24, C.C.R. WITH THE MOST STRINGENT REGULATION GOVERNING THE WORK. THIS PROJECT INCLUDES, WITHOUT LIMITATION, ACCESSIBLE PARKING, PORTIONS OF ACCESSIBLE PATHS OF TRAVEL AT WALKWAYS AND AT SELECT DOOR ENTRY LANDINGS, SIGNS AND WAYFINDING. THE CONTRACTOR SHALL PROVIDE FOR CONTINUOUS COMPLIANCE W/ ACCESSIBILITY FOR AREAS AND BUILDINGS TO REMAIN OPERATIONAL DURING THE COURSE OF WORK. THE CONTRACTOR SHALL VERIFY THAT THE COMPLETED WORK COMPLIES IN EVERY REGARD TO THE MOST STRINGENT REQUIREMENTS OF ALL APPLICABLE STATE AND FEDERAL CONSTRUCTION-RELATED ACCESSIBILITY STANDARDS.
2. NOTE: CERTAIN AREAS AND WALKS AT THIS SITE HAVE BEEN EXCLUDED FROM THE SCOPE OF WORK IN THIS CONTRACT. THE AREAS NOT IN CONTRACT HAVE BEEN OBSERVED TO EXHIBIT ELEMENTS OR CONDITIONS NOT NECESSARILY IN FULL COMPLIANCE WITH ACCESSIBILITY STANDARDS. SUCH ISSUES ARE BEING ADDRESSED IN A REASONABLY TIMELY MANNER CONSISTENT WITH THE ENTITY'S ADA OBLIGATIONS AND WILL BE INCLUDED IN REMEDIATION WORK SCHEDULED IN THE FUTURE.
3. A CERTIFIED ACCESS SPECIALIST SURVEY WAS PERFORMED AT THIS SITE. NOT ALL BARRIERS ARE, HOWEVER, NECESSARILY SHOWN, NOTED OR RECORDED IN THESE CONTRACT DOCUMENTS. THIS PROJECT IS LIMITED TO ADDRESSING ONLY THOSE ITEMS SHOWN AND OR NOTED ON THESE CONSTRUCTION PLANS AND DETAILS.
4. WHERE WORK REQUIRES CLOSURE OR RENDERING AN EXISTING ACCESSIBLE PATH OF TRAVEL NON-ACCESSIBLE, PROVIDE AN ALTERNATE TEMPORARY ACCESSIBLE PATH OF TRAVEL THAT COMPLIES WITH APPLICABLE REGULATIONS. TEMPORARY SHORT TERM (LESS THAN ONE DAY DURATION) NON-COMPLYING CONDITIONS ARE PERMISSIBLE. NOTIFY CITY AND ALL AFFECTED PARTIES AND OBTAIN WRITTEN AUTHORIZATION FROM CITY PRIOR TO CREATING NON-ACCESSIBLE FACILITIES WITHOUT APPROPRIATE AND SUFFICIENT ALTERNATE ACCESSIBLE PATH OF TRAVEL.
5. WHERE A DISCREPANCY OCCURS BETWEEN THESE NOTES OR PROJECT SPECIFICATIONS AND ANY APPLICABLE OR REFERENCED STANDARDS INCLUDING ALL APPLICABLE CODES AND REGULATIONS, THE MOST STRINGENT SHALL APPLY. DO NOT CONTINUE WITH ANY AFFECTED WORK UNLESS AND UNTIL RESOLVING SUCH DISCREPANCY TO THE SATISFACTION OF THE CITY, ARCHITECT AND AHJ.
6. SEE ACCESSIBLE PATH OF TRAVEL NOTES AND DETAILS SHEET A0.1.
7. CONTRACTOR IS RESPONSIBLE FOR COORDINATING WORK TO COMPLY WITH THE MOST STRINGENT STATE AND FEDERAL CONSTRUCTION RELATED ACCESSIBILITY STANDARDS
8. WAYFINDING, DIRECTIONAL AND INFORMATIONAL SIGNS AT THIS SITE AND BUILDING SHALL BE ACCESSIBLE AND SHALL BE PROVIDED IN COMPLIANCE WITH SECTION 703, 2013 CBC. CONTRACTOR SHALL PROVIDE TO ARCHITECT MANUFACTURER'S CUT SHEETS AND SUBMITTAL FOR ALL SIGNS INCLUDED IN THE SCOPE OF WORK IN THIS PROJECT AND INDICATED IN THESE CONSTRUCTION DOCUMENTS. MANUFACTURER SHALL INCLUDE IN THEIR SUBMITTAL A STATEMENT SIGNED BY THEIR REPRESENTATIVE AUTHORIZED TO BIND THE COMPANY THAT ALL SIGNS PROVIDED MEET OR EXCEED THE MOST STRINGENT STANDARDS OF BOTH STATE AND FEDERAL REGULATIONS.

## PARKING ANALYSIS

PARKING LOT # 1 DESIGNATED PARKING SPACE IS ALLOCATED BY EASEMENT AT THIS SITE.
TOTAL ACCESSIBLE PARKING SPACES EXISTING: 1
TOTAL ACCESSIBLE PARKING SPACES REQUIRED: 1 (CBC TABLE 208.2)
TOTAL ACCESSIBLE PARKING SPACES PROVIDED: 1 ( OF THOSE - 1 IS BEING RELOCATED AND CONFIGURED TO COMPLY WITH ACCESSIBILITY STANDARDS)
OF THE TOTAL ACCESSIBLE PARKING SPACES REQUIRED NUMBER OF VAN ACCESSIBLE STALLS REQUIRED = 1 (CBC TABLE 208.2.4)
OF THE TOTAL ACCESSIBLE PARKING SPACES REQUIRED NUMBER OF VAN ACCESSIBLE STALLS PROVIDED = 1

ACCESSIBLE PARKING WHERE PROVIDED AS UPGRADED IN THE SCOPE OF THIS PROJECT SHALL BE IN COMPLIANCE WITH CBC 11B-208.2.3, CBC11B- 208.2.3.1-4, CBC 11B-502 AND THE CODE COMPLIANCE NOTES IN THESE DOCUMENTS PERTAINING TO ACCESSIBLE PARKING.

## SIGN NOTES

1. ALL SIGNS SHALL BE PER ACCESSIBILITY CODES, 11B-307.3; 11B-216 AND 11B-703; 2013 CBC; AND 216 AND 703 2010 ADAS.
2. PROVIDE SUBMITTAL FOR ALL SIGNS TO BE REVIEWED AND APPROVED BY CITY AND ARCHITECT IN WRITING PRIOR TO PROCUREMENT
3. ALL GRAPHICS, COPY, FONT, COLOR, CONTRAST, SIZE, CONFIGURATION, AND CALIFORNIA CONTRACTED TYPE II BRAILLE ON ALL SIGNAGE SHALL CONFORM TO THE MOST STRINGENT REQUIREMENTS OF THE AMERICANS WITH DISABILITIES ACT (ADA) ACCESSIBILITY GUIDELINES AND WITH CBC, TITLE 24, C.C.R. FOR NEW BUILDING AND FACILITIES, CURRENT EDITION, U.O.N. (REFER TO MIN. ADA SIGN REQUIREMENT BELOW). SUBMIT SHOP DRAWINGS FOR APPROVAL BY ARCHITECT PRIOR TO FABRICATION.
4. ALL SIGNAGE SHALL BE DONE BY A SINGLE SIGN MANUFACTURER AND REVIEWED BY THE ARCHITECT BEFORE FABRICATION.

## SITE SIGN LEGEND

- (#-'X') WHEN A SIGN TYPE IS NOTED THE TYPE WILL BE INDICATED AFTER THE SIGN NUMBER WITH A LETTER (SUCH AS 'X' IN THE EXAMPLE TO THE LEFT) INDICATING THE SIGN TYPE AS NOTED IN THE REFERENCED DETAIL.
- (1) UNAUTHORIZED PARKING TOW-AWAY WARNING SIGN - MOUNT ON POLE AT PARKING LOT ENTRANCE - SIGN FACING INGRESSING VEHICLES. SEE DETAILS 10 / A3.0 AND 8 / A3.0 [CBC 11B-502.8] SEE ACCESSIBLE PARKING NOTES SHEET A3.2.
- (2-B) VAN ACCESSIBLE RESTRICTED PARKING SIGN - SEE DETAILS 4/A3.0 - TYPE 'B' AND 8/A3.0 [CBC 11B-216.5; CBC 11B-502.6] SEE ACCESSIBLE PARKING NOTES SHEET A3.2.
- (3-X) DIRECTIONAL SIGN W/ ISA - SEE DETAILS 7/A3.0 - TYPE 'D' WITH LEFT AND RIGHT ARROWS [CBC 11B-216.5; CBC 11B-502.6]

## ACCESSIBLE PATH OF TRAVEL

PATHS OF TRAVEL PROVIDED ARE SHOWN DASHED. SEE LEGEND.

1. ON-SITE ACCESSIBLE PATHS OF TRAVEL WITHIN THE SCOPE OF THIS PROJECT SHALL BE MADE ACCESSIBLE WHERE MODIFICATIONS TO THE ON-SITE WALKS ARE SPECIFICALLY SHOWN. GAPS IN PAVEMENT IN EXCESS OF 3/8" WHEREVER THESE OCCUR AT THE SITE SHALL BE FILLED WITH NON-SHRINK GROUT (CRACKS AND SPALLED LOCATIONS) OR FLEXIBLE SEALANT (EXPANSION JOINTS) AS NECESSARY AND APPROPRIATE FOR EACH LOCATION. ABRUPT CHANGES IN LEVEL 1/4" OR MORE SHALL BE GROUND FLUSH. REMAINING SURFACE SHALL BE SLIP RESISTANT. SEE PLANS FOR ADDITIONAL REQUIREMENTS. SEE DETAIL 20/A3.3 FOR REPAIR REQUIREMENTS. [CBC 11B-208.3.1; CBC 11B-502.7.1]
2. ACCESSIBLE SITE AND BUILDING ELEMENTS ARE TO COMPLY WITH CHAPTER 11B, 2013 CBC, TITLE 24, PART 2; AND 2010 ADA REQUIREMENTS.
3. (N) ACCESSIBLE PARKING SPACES SHALL, UPON COMPLETION, BE REVIEWED BY THE CONTRACTOR ON SITE AND BE VERIFIED FOR COMPLIANCE WITH SECTION 11B-502, 2013 CBC, AND 2010 ADA REQUIREMENTS. PROVISIONS HAVE BEEN INCLUDED IN THESE DOCUMENTS INDICATING REQUIREMENTS FOR ACCESSIBILITY AT (N) ACCESSIBLE PARKING.
4. (E) ACCESSIBLE PATHS TO REMAIN SHALL BE REVIEWED ON SITE AND VERIFIED BY THE CONTRACTOR FROM SITE POINTS OF ACCESS (ACCESSIBLE PARKING) DESIGNATED ACCESSIBLE PARKING TO BUILDING GROUND LEVEL ACCESSIBLE ENTRANCE AT THE NORTH SIDE OF THE EXISTING BUILDING AND VERIFIED AT COMPLETION OF WORK TO BE IN FULL COMPLIANCE WITH 2013 CBC 11B-206.2; GROUND SURFACES AND WALKS SHALL BE STABLE, FIRM AND SLIP RESISTANT [11B-302.3]; SHALL NOT HAVE OPENINGS GREATER THAN 1/2" [CBC 11B-302.3]; SHALL HAVE NO ABRUPT CHANGES IN LEVEL EXCEEDING 1/4" VERTICAL [CBC 11-B-303.2]; AND FOR ABRUPT CHANGES IN LEVEL BETWEEN 1/4" AND 1/2" ARE BEVELED WITH A SLOPE NOT STEEPER THAN 1v:2h [CBC 11B-303.3]. WHERE THERE IS A DROP-OFF EXCEEDING 4" AT THE EDGE OF A PATH OF TRAVEL, PROVIDE WARNING CURBS 6" MINIMUM IN HEIGHT [CBC 11B-303.5]. WORK WHICH ALTERS EXISTING PATHS OF TRAVEL OR NEW WORK AT ACCESSIBLE PATHS SHALL FULLY COMPLY WITH SAME.
5. SITE WALKWAYS AS INDICATED ON PLAN SHALL PROVIDE A BARRIER FREE PATH OF TRAVEL . FOR PERSONS WITH DISABILITIES. WALK SURFACES SHALL BE CONSTRUCTED TO 48" MINIMUM [CBC 11B-403.5.1.3] UNOBSTRUCTED WIDTH WITH SLIP RESISTANT SURFACE PER 2013 CBC SECTION 11B-403. CROSS SLOPE SHALL NOT EXCEED (1:50) (2%) NOR EXCEED 1:20 (5%) IN DIRECTION OF TRAVEL [CBC 11B-403.3] . WALK SLOPES EXCEEDING 1:20 (5%) SHALL BE CONSTRUCTED TO CONFORM TO RAMP REQUIREMENTS. WALKS WITH A CONTINUOUS GRADIENT SHALL HAVE A 5 FOOT LEVEL AREA WITHIN EACH 400 FEET MAXIMUM RUN. [CBC 11B-403.5.3; CBC 11B-403.7]
6. THERE SHALL BE NO DROPS IN ELEVATION GREATER THAN 4" AT THE EDGE OF ANY ACCESSIBLE ROUTE, EXCEPT FOR WALKS ADJACENT TO PARKING AREAS WITH ACCEPTABLE 6" MAX HEIGHT CURBS, OR AS DETAILED SPECIFICALLY AT NON-TYPICAL INSTANCES. WHERE DROP OFFS ADJACENT TO THE WALK SURFACE GREATER THAN 4 INCHES OCCUR AND NO SPECIFIC DETAIL HAS BEEN NOTED, AS A MINIMUM, PROVIDE A 6 INCH X 6 INCH WARNING CURB OR PROTECTION RAILS. DROP OFFS EXCEEDING 30 INCHES WITHIN 24 INCHES HORIZONTAL FROM THE EDGE OF THE WALK MUST BE PROTECTED BY GUARDRAILS 42 INCHES IN HEIGHT AND WITH INTERMEDIATE RAILS THAT PREVENT THE PASSAGE OF A 4 INCH MAXIMUM DIAMETER SPHERE. DROP OFFS INCLUDE SLOPED GRADE THAT EXCEEDS A 2h:1v GRADIENT.
7. ACCESSIBLE PATHS OF TRAVEL TO BE FREE OF GRATINGS WHEREVER POSSIBLE. GRATINGS LOCATED IN THE WALKWAY SURFACE SHALL HAVE GRID OPENINGS 1/2" MAX WIDE IN ONE DIRECTION ORIENTED PERPENDICULAR TO THE DOMINANT DIRECTION OF TRAVEL, SECTION 11B-302.3, 2013 CBC.
8. FLOOR(S) OR LANDING(S) SHALL NOT BE MORE THAN 1/2" LOWER THAN THE TOP OF THE THRESHOLD OF THE DOOR, AND LANDINGS SHALL BE CONSTRUCTED WITH A MAXIMUM GRADIENT OF 2% IN ANY DIRECTION FOR A MINIMUM OF 60 INCHES MEASURED PERPENDICULAR TO THE CLOSED DOOR AND 24 INCHES MEASURED FROM THE DOOR STRIKE ON THE EXTERIOR SIDE.
9. CONTRACTOR TO VERIFY THAT ALL BARRIERS AND HAZARDS PRESENT IN THE PATH OF TRAVEL HAVE BEEN REMOVED AND THAT THE ACCESSIBLE ROUTES OF TRAVEL COMPLY W/ SECTION 11B-307, 2013 CBC.
10. WHERE WALKS CROSS OR ADJOIN A HAZARDOUS VEHICULAR AREA AND THE WALK SURFACES ARE NOT SEPARATED BY CURBS, RAILINGS OR OTHER ELEMENTS BETWEEN THE PEDESTRIAN AREA AND THE VEHICULAR AREAS, THE BOUNDARY BETWEEN AREAS SHALL BE DEFINED BY A CONTINUOUS DETECTABLE WARNING SURFACE COMPLYING WITH SECTIONS 11B-705.1.1 AND 12B-705.1.2,2013 CBC.
11. FOR ADDITIONAL REQUIREMENTS AT (N) WORK IN THE PATH OF TRAVEL SEE ACCESSIBILITY NOTES BELOW AND SEE DETAILS 9 AND 10 THIS SHEET.
12. CONTRACTOR TO VERIFY THAT ALL BARRIERS AND HAZARDS PRESENT IN THE PATH OF TRAVEL HAVE BEEN REMOVED AND THAT THE ACCESSIBLE ROUTES OF TRAVEL COMPLY W/ SECTIONS 11B - 307, AND 11B-705.1.2.5,2013 CBC.
13. FOR ADDITIONAL REQUIREMENTS AT (N) WORK IN THE ACCESSIBLE PATH OF TRAVEL SEE STANDARD DETAILS AND NOTES IN THESE DOCUMENTS.

## SHEET KEY NOTES

[1] (N) ACCESSIBLE P.O.T. 4" MIN THK. (2" MIN OVERLAY) AC PAVED WALK , WIDTH AS DETAILED. AT LOCATIONS WHERE (E) WALKS AND DOOR / GATE LANDINGS ARE TO BE EXTENDED OR WIDENED CONFORM FLUSH TO (E) WALK SURFACE TO REMAIN. EXTEND AS SHOWN FROM (E) EDGE OF AC PAVED PARKING AREA TO REMAIN TO EDGE OF (E) PAVED WALKS. MAXIMUM ALLOWED RUNNING SLOPE (SLOPE IN DIRECTION OF TRAVEL) IS 5.0% (4.5% MAX TO ALLOW FOR CONSTRUCTION TOLERANCE). USE MINIMUM RUNNING SLOPE PRACTICABLE. MAXIMUM ALLOWED CROSS SLOPE IS 2.0% (CONSTRUCT USING 1.5% MAX TO ALLOW FOR CONSTRUCTION TOLERANCE). WHERE WALK CHANGES DIRECTION AND AT INTERSECTIONS (HATCHED AREAS) SLOPE SHALL BE LIMITED TO 1.5% MAX IN ANY DIRECTION. SLOPE TO DRAIN WATER AWAY FROM WALKS AND TOWARDS NATURAL DRAINAGE / STORMWATER FEATURES. PONDING OF WATER IS NOT PERMISSIBLEEXTEND PAVEMENT AS NECESSARY (TRANSITIONAL SEGMENTS) WITH MINIMUM WARPING TO CONFORM TO (E) ADJACENT PAVEMENT TO REMAIN. WARPED TRANSITIONAL SEGMENTS SHALL OCCUR OUTIDE OF THE MINIMUM WIDTH REQUIRED FOR ANY WALK. CONFORM ABUTTING EDGES FLUSH TO (E) PAVED SURFACES TO REMAIN WITH A MINIMUM OF WARPING OF PLANE WHILE REMAINING WITHIN MAXIMUM CROSS AND RUNNING SLOPES. AT EXPOSED PAVED SURFACES PROVIDE NEAT AND UNIFORM SLIP AND SKID RESISTANT SURFACE FINISH TREATMENT (0.8 MIN WET COEFF. OF FRICTION). SEE PATH OF TRAVEL NOTES SHEET A1.0. SEE ALSO PATH OF TRAVEL DETAILS AND ACCESSIBILITY NOTES SHEET T0-4. SEE DETAILS 15/A3.0 AND 18/A3.0 FOR AC PAVEMENT AND DETAIL 5/A3.1 FOR CONC. PVMET. SEE ALSO PAVEMENT NOTES SHEET A3.1. SEE AC / CONCRETE PAVEMENT SPECIFICATIONS SHEETS T0-4 AND T0-5.

NOTE: APPROVAL OF THESE PLANS BY JURISDICITIONAL AJENCY REPRESENTS ACKNOWLEGEMENT BY THE AHJ THAT THE ON-SITE AREAS AT THIS LOCATION REPRESENT CONDITIONS THAT DO NOT EXCEED HAZARDS TO PEDESTRIANS GREATER THAN THE HAZARDS PRESENT AT LOCATIONS WHERE SIDEWALKS IN THE PUBLIC RIGHT-OF-WAY CROSS OR ADJOIN VEHICULAR AREAS. AS SUCH AHJ ACKNOWLEGES THAT VEHICULAR AREAS PRESENT AT THIS SITE ARE NOT HAZARDOUS WITHIN THE MEANING OF THE CALIFORNIA BUILDING CODE SECTION 11B-247.1.2.5.

[2] (N) PAVEMENT MARKING STRIPING DESIGNATING PARKING SPACES TO ACCOMMODATE REVISED PARKING LAYOUT FOR ACCESSIBLE PARKING. SEE ENLARGED PLAN SHEET A1.1.

[3] AC PAVED WALK REPAIRS: AT LOCATIONS SHOWN PROVIDE (N) AC PAVEMENT OVERLAY ACCESSIBLE WALK, WIDEN (E) WALK TO MINIMUM 5'-0". ACCESSIBLE WALKING SURFACE PER ACCESSIBLE ROUTES DETAILS AND NOTES THIS SHEET. ALL (N) SURFACES AND SURFACES REPLACED, OVERLAID OR REPAIRED SHALL HAVE A NON-SLIP FINISH, TYPICAL, U.O.N. SEE SHEETS T0.4 AND T0.5.

[4] AT ALL PUBLIC ACCESSIBLE EXTERIOR ENTRY DOORS AT THIS SITE PROVIDE AN ISA SIGN. DOOR MOUNTED DECAL AT GLASS DOORS PER 2/A3.0. OPTION - USE WALL MOUNTED SIGN PER 6/A3.0

[5] WHERE PARKING OCCURS PERPENDICULAR AND ADJACENT TO WALKS AND WALKS ARE LESS THAN 5 FEET IN WIDTH, PROVIDE CONC. WHEEL STOPS PER 12/A3.0. TYPICAL. SEE ALSO WHEEL STOP NOTES SHEET T0.8.

[6] NEW ACCESSIBLE PEDESTRIAN WALK. SEE ENLARGED PLAN. SEE ACCESSIBLE PATH OF TRAVEL NOTES THIS SHEET.

[7] (N) ACCESSIBLE ENTRANCE GATE AND CONC. LANDING. SEE DETAIL 19/A3.0. SEE ENLARGED PLAN.

[8] (N) ACCESSIBLE LANDING AND GATE. SEE DETAIL 19/A3.0. SEE ENLARGED PLAN AS NOTED.

[9] (N) ACCESSIBLE HANDRAILS AT EXISTING STAIRS. SEE DETAILS PER ENLARGED PLAN SHEET A3.3 AND A3.4.

[10] (N) ACCESSIBLE WHEELCHAIR SPACE AT (E) BENCH. SEE ENLARGED PLAN AS NOTED.

[11] (N) ACCESSIBLE DRINKING FOUNTAIN. SEE DETAIL 4/A3.10. SEE ENLARGED SITE PLAN.

[12] BUILDING ADDITION. SEE BUILDING PLANS.

[13] RELOCATE (E) REFUSE CONTAINERS IMMEDIATELY ADJACENT TO RE-PAVED PORTION OF PATH OF TRAVEL.

[14] (N) ACCESSIBLE REFUSE AND RECYCLING RECEPTACLES. SEE DETAIL 14/A3.10.

[15] (N) ACCESSIBLE BENCH AND WHEELCHAIR SPACE. SEE ENLARGED SITE PLAN.

ADD ALTERNATE 1:

[16] ADD ALTERNATE 1: (N) TRAFFIC RATED CONCRETE FOR VAN ACCESSIBLE PARKING AND ACCESS AISLE. PAVEMENT MARKINGS AND SIGNS. SEE EMLARGED SITE PLAN.

[17] ADD ALTERNATE 1: (N) ACCESSIBLE PEDESTRIAN ENTRANCE CHAIN LINK GATE AND AC PAVED LEVEL LANDING. SEE DETAIL 19/A3.0. SEE ENLARGED PLAN.

ADD ALTERNATE 2:

[18] ADD ALTERNATE 2: (N) ACCESSIBLE DRINKING FOUNTAIN. SEE ENLARGED SITE PLAN.

[19] ADD ALTERNATE 2: (N) ACCESSIBLE PICNIC FACILITIES. SEE ENLARGED SITE PLAN.


Craig D. Williams
Architecture
Interiors
Planning
Project
Management

295 Neva Street
Sebastopol, CA
95472

(707) 823-2724
CASpAccess@gmail.com



COPYRIGHT AND CONDITIONAL RIGHT OF USE
Drawings, specifications and all ideas, designs, and arrangements indicated on these drawings and specifications are and shall remain the property of Craig Williams, architect and are intended to be used in connection with this specific project only. No part shall be copied or disclosed to others or otherwise be used in connection with any other work or project other than the specified scope of work for which they have been prepared without the prior written consent of the architect. There shall be no changes or deviations from these drawings or the accompanying specifications without the prior written consent of the Architect - the design professional in responsible charge.

THESE DRAWINGS ARE INSTRUMENTS OF SERVICE THE PROPERTY OF CRAIG D. WILLIAMS, ARCHITECT, COPYRIGHT © 2015-2016

Visual contact with these plans and specifications shall constitute conclusive evidence of acceptance of these restrictions.


CRAIG D. WILLIAMS

LICENSED ARCHITECT
CRAIG DOUGLAS WILLIAMS
No. C026642
REN. 10-31-17
STATE OF CALIFORNIA

08 30 2016

NOT FOR CONSTRUCTION UNLESS SIGNED BY THE ARCHITECT AND STAMPED APPROVED BY THE AUTHORITY HAVING JURISDICTION

AGENCY APPROVALS

# ACCESSIBILITY UPGRADES IVES POOL AND POOL HOUSE
7400 WILLOW STREET
SEBASTOPOL, CA

PROJECT NUMBER:
082515.00
DATE:
30 AUGUST, 2016
DRAWN BY:
CW
CHECKED BY:
CW
REVISIONS:

CODE ANALYSIS
ACCESSIBILITY NOTES
REFERENCE PLAN

**A1.0**


© THESE DRAWINGS ARE INSTRUMENTS OF SERVICE AND ARE THE SOLE PROPERTY OF CRAIG WILLIAMS ARCHITECT, ANY USE WITHOUT WRITTEN CONSENT IS PROHIBITED.

# GENERAL DEMOLITION NOTES

1. DEMOLITION NOTES ARE GUIDELINES. FIELD VERIFY SPECIFIC QUANTITIES AND LOCATIONS OF ALL ITEMS TO BE REMOVED PRIOR TO COMMENCEMENT OF THE WORK.
2. DEMOLITION KEYNOTES APPLY TO ALL ITEMS SHOWN DASHED, WHETHER OR NOT A KEY NOTE APPEARS ADJACENT TO EACH ITEM SHOWN.
3. DEMOLITION CONTRACTOR SHALL COORDINATE HIS WORK WITH THE GENERAL, PLUMBING, MECHANICAL, AND ELECTRICAL CONTRACTORS FOR THE PURPOSE OF DISCONNECTING POWER AND OTHER SERVICES WHICH MAY BE DISTURBED BY THE DEMOLITION.
4. REFER TO OTHER DRAWINGS AS OCCURS FOR ADDITIONAL DEMOLITION WORK NOT SHOWN HERE. REFER ALSO TO PLAN DRAWINGS FOR ADDITIONAL INFORMATION RELATING TO THE EXTENT OF DEMOLITION AS MAY BE REQUIRED TO PREPARE THE WORK FOR NEW CONSTRUCTION. REFER TO AND COORDINATE ALL DEMOLITION WORK WITH SEQUENCING OF TRADES AND FOR ADDITIONAL AREAS AND EXTENT OF DEMOLITION AS NECESSARY FOR THE PREPARATION FOR NEW WORK, AND FOR EQUIPMENT AND SYSTEMS THAT ARE INTENDED TO BE REMOVED OR TO REMAIN, AND FOR RELATED DEMOLITION WORK NOT SHOWN ON THESE DEMOLITION PLANS.
5. VERIFY WITH OWNER ALL ITEMS AND UTILITIES SCHEDULED TO BE RELOCATED OR NECESSARY TO ACCOMMODATE NEW CONSTRUCTION AS INDICATED. CAREFULLY REMOVE SAME, CLEAN AND REPAIR ITEMS TO FUNCTIONAL CONDITION ADEQUATE FOR INTENDED REUSE. REINSTALL REROUTE ITEMS AND SYSTEMS IN LOCATIONS INDICATED AND AS NECESSARY FOR PROPER FIT AND FUNCTION. COMPLY WITH SIMILAR INSTALLATION REQUIREMENTS FOR NEW MATERIALS AND EQUIPMENT. PROVIDE CONNECTIONS, SUPPORTS, AND MISCELLANEOUS MATERIALS NECESSARY TO MAKE ITEM FUNCTIONAL FOR USE INDICATED AND INTENDED. TEMPORARILY REMOVE OR LIFT EXISTING CONDUIT, PIPING, WIRES, AND FIXTURES, NOT NECESSARILY NOTED TO BE REMOVED AS NECESSARY TO INSTALL NEW FINISHES. CONTRACTOR SHALL PROTECT SUCH CONDUIT, WIRES, PIPING AND FIXTURES, IF AND WHERE OCCURS, AFTER NEW FINISHES ARE INSTALLED AND COMPLETED, ALL CONDUITS, WIRES, AND PIPING THAT IS NOT TO BE CONCEALED AND ALL FIXTURES SHALL BE REINSTALLED AND CONTRACTOR SHALL VERIFY THAT ALL SYSTEMS AND FIXTURES ARE OPERATIONAL. NOTE: THE INTENT OF THIS PROJECT IS, WHERE PRACTICABLE, TO CONCEAL INFRASTRUCTURE, SUCH AS FOR EXAMPLE AND WITHOUT LIMITATION, CONDUIT, DUCTS, WIRES, AND PIPING THAT IS TYPICALLY ROUTED WITHIN WALLS, CHASES, UNDER FLOORS AND SLABS, ABOVE CEILINGS AND BEHIND FINISHES. MAINTAIN AND/OR PROVIDE ALL NECESSARY ACCESS (SUCH AS FOR EXAMPLE, PANELS, HATCHES, PORTS, JUNCTION BOXES, ETC.) AS NECESSARY TO PROVIDE SUCH ACCESS FOR INSPECTION, MONITORING, CONTROL AND MAINTENANCE.
6. ALL EXISTING ABANDONED PIPING, CONDUIT, WIRING, AND DUCTS NOT SCHEDULED TO REMAIN OR BE REUSED SHALL BE REMOVED COMPLETELY. VERIFY EXTENT AND TERMINATION CONDITIONS W/ OWNER.
7. AT ALL WALLS, OR PORTIONS OF WALLS SCHEDULED TO BE REMOVED, INCLUDE RE-ROUTING OF INFRASTRUCTURE TO REMAIN AND THE DEMOLITION OF EXISTING MECHANICAL, PLUMBING, AND ELECTRICAL UTILITIES INCLUDED IN THE WALL BACK TO THEIR SOURCE.
8. ALL MOVABLE EQUIPMENT, FURNISHINGS, ETC. IN THE WORK AREA TO BE REMOVED BY THE OWNER PRIOR TO THE START OF CONSTRUCTION.
9. ANY WORK WHICH MAY EFFECT THE EXISTING FACILITIES NOT INCLUDED IN THE SCOPE OF THIS PROJECT SHALL BE COORDINATED WITH AND AUTHORIZED BY THE OWNER'S CONSTRUCTION MANAGER. NOTIFY THE OWNER'S CONSTRUCTION MANAGER A MINIMUM OF 48 HOURS IN ADVANCE OF PROCEEDING WITH THE WORK.
10. AFTER DEMOLITION WORK IS COMPLETE, CONTRACTOR SHALL COORDINATE MEETING WITH OWNER'S CONSTRUCTION MANAGER TO REVIEW THE CONDITION OF ALL MATERIAL AND EQUIPMENT STORED FOR REUSE ON THIS PROJECT OR TO BE TURNED OVER TO THE OWNER.
11. THE DEMOLITION DRAWINGS ARE TO ASSIST THE CONTRACTOR IN THE GENERAL DETERMINATION OF THOSE ITEMS TO BE REMOVED AND RELOCATED. CONTRACTOR SHALL REVIEW ALL DRAWINGS, SPECIFICATIONS AND DOCUMENTS THAT ARE INCLUDED IN THE BID PACKAGE TO DETERMINE THE FULL EXTENT OF THE SCOPE OF WORK. THE CONTRACTOR SHALL REFER TO CONDITIONS AND INFORMATION DESCRIBED IN OTHER AREAS OF THE CONTRACT DOCUMENTS AND CONTAINED IN RECORD DOCUMENTS OF ORIGINAL CONSTRUCTION FOR THE SUBJECT FACILITIES.
12. INFORMATION PER ALL PIPING, DUCTING AND CONDUIT SHOWN ON THESE PLANS AND IN RECORD DOCUMENTS MAY HAVE BEEN PROVIDED BY THE OWNER AND IF AND WHEN SHOWN IS DIAGRAMMATIC AND FOR REFERENCE PURPOSES ONLY. THE ARCHITECT DOES NOT WARRANT THE ACCURACY OR EXTENT OF SUCH ITEMS. VERIFY ALL CONDITIONS. RECORD DOCUMENTS OF EXISTING FACILITIES ARE AVAILABLE FOR REVIEW BY APPOINTMENT ONLY AT THE OWNER'S OFFICES FOR REVIEW BY CONTRACTORS.
13. THE CONTRACT DOCUMENTS MAY NOT REFLECT ALL EXISTING CONDITIONS ACCURATELY. THEY ARE INTENDED TO GENERALLY DESCRIBE THE SCOPE OF WORK. NOT ALL UNIQUE CONDITIONS HAVE BEEN IDENTIFIED. EXISTING ITEMS ARE SHOWN AS ACCURATELY AS POSSIBLE WITH THE INFORMATION AVAILABLE. ANY DISCREPANCIES OR DISCOVERIES OF UNFORESEEN CONDITIONS, AND ANY EXISTING CONDITIONS OBSERVED THAT ARE NOT INDICATED IN THE CONSTRUCTION DOCUMENTS AND WHICH WILL AFFECT THE DEMOLITION OR NEW CONSTRUCTION, SHALL BE BROUGHT TO THE ATTENTION OF THE ARCHITECT AND OWNER PRIOR TO COMMENCING WORK IN AFFECTED AREAS. VERIFY ALL EXISTING CONDITIONS AND UTILITIES IN THE FIELD. NOTIFY ARCHITECT OF ANY DISCREPANCIES THAT MAY OCCUR. IT SHALL BE THE CONTRACTOR'S RESPONSIBILITY TO IDENTIFY AND INFORM THE ARCHITECT IN WRITING OF ANY CONDITIONS NOT SHOWN IN CONTRACT DOCUMENTS WHICH AFFECT THE WORK.
14. ALL AREAS TO BE DEMOLISHED AS DESCRIBED HEREIN SHALL BE PREPARED FOR ALTERATION WORK DESCRIBED ELSEWHERE IN THESE PLANS, SPECIFICATIONS AND CONSTRUCTION DOCUMENTS. CONTRACTOR TO REVIEW ALL DOCUMENTS FOR OTHER DEMOLITION WORK AND SHALL COORDINATE ALL WORK.
15. REFER ALSO TO OTHER ARCHITECTURAL PLANS FOR ADDITIONAL DEMOLITION WORK NOT SHOWN ON DEMOLITION PLANS AND FOR ADDITIONAL INFORMATION RELATED TO PREPARING CONDITIONS FOR NEW WORK.
16. DEMOLITION CONTRACTOR SHALL REVIEW ALL PLANS AND SPECIFICATIONS AND COORDINATE WITH OTHER TRADES TO DETERMINE SPECIAL REQUIREMENTS WHICH DEFINE THE SCOPE, EXTENT, CONFIGURATION, LOCATION AND ALIGNMENT OF COMPLETED DEMOLITION CONDITIONS.
17. CONDUCT A PRE-DEMOLITION MEETING AT THE PROJECT SITE BEFORE COMMENCING WITH DEMOLITION WORK. INSPECT AND DISCUSS CONDITION OF CONSTRUCTION TO BE SELECTIVELY DEMOLISHED. REVIEW DEMOLITION METHODS AND PROCEDURES. REVIEW PROTECTION MEASURES FOR EXISTING CONSTRUCTION AND BUILDING ENTRIES, AND OTHER BUILDING FACILITIES DURING DEMOLITION OPERATIONS. CONDUCT WALK-THROUGH WITH OWNER'S REPRESENTATIVE TO ESTABLISH BASELINE OF ACCEPTABLE STANDARDS OF ITEMS SCHEDULED FOR REUSE. COORDINATE ALL SCHEDULING AND SEQUENCING OF DEMOLITION WORK TO MINIMIZE DISRUPTIONS TO EXISTING ONGOING ON-SITE OPERATIONS BY OWNER AND ITS TENANTS AND FOR ONGOING ACCESS TO AND USE OF PUBLIC FACILITIES BY THE PUBLIC.
18. DEMOLITION / SAWCUT WORK FOR THIS BUILDING IS GENERALLY INDICATED ON THESE DEMOLITION PLAN DRAWINGS. CONTRACTOR TO VERIFY ALL SAWCUT WORK WITH OTHER TRADES AND DISCIPLINES AS MAY BE SHOWN ELSEWHERE AND ON STRUCTURAL, ELECTRICAL, PLUMBING OR MECHANICAL DRAWINGS. CONTRACTOR SHALL INCLUDE ALL SUCH WORK, WHETHER INDICATED OR NOT, IN HIS/HER BID AND AS REQUIRED FOR A COMPLETE INSTALLATION OF ALL SYSTEMS INDICATED ON THE DRAWINGS.
19. COORDINATE EXTENT OF PLUMBING, MECHANICAL, ELECTRICAL, DATA, SECURITY, COMMUNICATION AND OTHER DEVICES, EQUIPMENT AND INFRASTRUCTURE TO BE REMOVED OR RELOCATED AS REQUIRED TO RECEIVE NEW WORK PER PLAN. VERIFY ALL EXISTING DATA, SECURITY, FIRE ALARM AND COMMUNICATION CIRCUITS, FIXTURES AND DEVICES PRIOR TO DEMOLITION.
20. THE CONTRACTOR, AND SUBCONTRACTORS, ARE RESPONSIBLE FOR VISITING THE SITE TO OBSERVE THE EXTENT AND NATURE OF THE EXISTING CONDITIONS PRIOR TO SUBMITTING BIDS FOR THE WORK. ANY EXISTING CONDITIONS OBSERVED WHICH WILL AFFECT THE WORK NOT OTHERWISE INDICATED IN THESE DOCUMENTS SHALL IMMEDIATELY BE BROUGHT TO THE ATTENTION OF THE ARCHITECT.
21. ALL ITEMS SCHEDULED TO BE REMOVED AND NOT RELOCATED, TURNED OVER TO THE DISTRICT, OR SALVAGED ARE TO BE REMOVED FROM THE SITE, RECYCLED OR DISPOSED OF IN A MANNER COMPLYING WITH APPLICABLE REGULATIONS.
22. INSTALL SPECIFIED PROTECTIVE WRAP WHERE NECESSARY TO PROTECT EXISTING CONDITIONS PRIOR TO COMMENCING DEMOLITION WORK. ERECT AND MAINTAIN TEMPORARY PROTECTIONS, INCLUDING BRACING, BARRICADES, SIGNS, AND OTHER MEASURES AS REQUIRED BY CODES AND REGULATIONS. ERECT AND MAINTAIN DUST PROOF PARTITIONS AND TEMPORARY ENCLOSURES TO LIMIT DUST AND DIRT MIGRATION AND TO SEPARATE AREAS FROM FUMES AND NOISE. PROTECT WALLS, CEILINGS, FLOORS, AND OTHER EXISTING FINISH TO REMAIN. COVER AND PROTECT FURNITURE, FURNISHINGS, AND EQUIPMENT NOT TO BE REMOVED.
23. PROVIDE TEMPORARY SHORING / BRACING AS NECESSARY TO PROTECT EXISTING BUILDING COMPONENTS PRIOR TO RELATED WORK.
24. PROVIDE TEMPORARY FACILITIES AS NECESSARY TO PROTECT THE PUBLIC AND MAINTAIN ACCESSIBILITY IN AREAS TO BE OCCUPIED BY THE PUBLIC.
25. ALL SAW CUTS OF EXISTING CONDITIONS TO REMAIN SHALL BE ALIGNED, SMOOTH AND EVEN TO CONFORM TO AND RECEIVE NEW WORK SHOWN ELSEWHERE IN THE CONSTRUCTION DOCUMENTS.
26. REMOVE EXISTING FINISHES, INCLUDING WALL COVERINGS, WALL BASE AND FLOOR COVERINGS, UNLESS OTHERWISE NOTED. REMOVE RESIDUAL ADHESIVE AND PREPARE SUBSTRATE FOR NEW FLOOR COVERINGS BY ONE OF THE METHODS RECOMMENDED BY MANUFACTURER'S OF FINISHES SCHEDULED TO BE USED IN THIS PROJECT. REMOVE ALL GLUE, DELETERIOUS MATERIALS, ANCHORS, NAILS, PINS, HANGERS, ETC. FROM EXISTING SURFACES OF FLOORS, WALLS AND CEILINGS TO REMAIN AS REQUIRED TO RECEIVE NEW WORK. EXISTING SURFACES TO REMAIN SHALL BE LEFT FREE FROM DEBRIS AND REMNANTS. PREPARE SURFACES FOR NEW WORK AS SCHEDULED AND AS REQUIRED BY MFR's. PATCH EXISTING SURFACES TO REMAIN AS CONDITIONS REQUIRE. SUCH AREAS SHALL BE SMOOTH AND ALIGNED, TRUE TO PLANE AND LINE FOR A NEAT AND FINISHED RESULT.
27. WHERE WALLS ARE INDICATED TO BE DEMOLISHED OR SAW CUT TO RESULT IN A MODIFIED CONFIGURATION OR AS REQUIRED TO RECEIVE NEW OPENINGS, THE WALL FRAMING AND ASSOCIATED ANCHORS SHALL BE CUT FLUSH TO THE EXTENT REQUIRED TO ACCOMMODATE THE NEW CONFIGURATION OR OPENING. CUTS SHALL BE STRAIGHT, AND ALIGNED TO RECEIVE WORK SCHEDULED FOR THAT AREA. VERIFY ALL ROUGH OPENING SIZES PRIOR TO DEMOLITION WORK IN AFFECTED AREAS. DO NOT CUT STRUCTURAL ELEMENTS UNLESS SPECIFICALLY NOTED ON PLANS.
28. COORDINATE WITH OWNER'S REPRESENTATIVE FOR UTILITIES AND INFRASTRUCTURE TO REMAIN. VERIFY ALL UTILITIES AND INFRASTRUCTURE TO BE REMOVED, RE-ROUTED OR RELOCATED PRIOR TO COMMENCING DEMOLITION WORK IN AFFECTED AREAS. DEMOLISH ALL WIRING, CABLING, PIPING, DUCTING, CONDUIT, ETC. AND OTHER INFRASTRUCTURE AS OCCURS WHICH IS NOT TO REMAIN AS PART OF RENOVATION SCHEDULED FOR THIS PROJECT AS SHOWN ON THESE CONTRACT DOCUMENTS. VERIFY AND COORDINATE THE TERMINATION OF SERVICE, CUT AND CAP BEHIND FINISHED SURFACE OR ABANDON BACK TO SOURCE AS PRACTICABLE AND AS REQUIRED ELSEWHERE IN THE PLANS. PROVIDE ALL CODE REQUIRED ACCESS BOXES, SHUT-OFFS AND COVERS AND VERIFY FINAL LOCATIONS AND FINISH OF SAME WITH OWNER.
29. CAP ALL UTILITIES TO BE ABANDONED BEHIND THE FACE OF FINISH, I.E. AT WALLS, FLOORS, CEILINGS, FINISH GRADED, ETC. VERIFY WITH OWNER FOR SPECIFIC REQUIREMENTS. DOCUMENT AND RECORD ALL CONCEALED TERMINATION AND CAP LOCATIONS ACCURATELY ON RECORD DRAWINGS. DESCRIBE IN DETAIL ALL LOCATIONS AND ITEMS CAPPED OR REROUTED, IDENTIFY SIZE AND TYPE OF INFRASTRUCTURE INCLUDING WIRES, CONDUITS, PIPING (TYPE), ETC. SUBMIT COPIES TO OWNER'S REPRESENTATIVE. ALL EXISTING ABANDONED PIPING , CONDUIT AND WIRING NOT SCHEDULED TO BE REUSED SHALL BE REMOVED COMPLETELY.
30. COMPLETED RELOCATION AND TERMINATION OF EXISTING SYSTEMS AND ASSOCIATED INFRASTRUCTURE SCHEDULED TO REMAIN OPERATIONAL DURING THIS PROJECT SHALL RESULT IN A FULLY FUNCTIONING AND INTEGRATED SYSTEM COMPLETE WITH ALL INCIDENTALS.
31. REMOVE ALL WIRING, CABLES, ANCHORS, NAILS, SUPPORTS, ADHESIVES, SEALANT, INSULATION, ETC.TO RECEIVE (N) WORK. (N) FINISHED SURFACES AND FINISHED SURFACES TO REMAIN AFTER DEMOLITION SHALL BE FREE OF EXPOSED CONDUIT, PIPING, WIRING, ETC. RE-ROUTE CIRCUITS AND PIPING ACCORDINGLY. PREPARE (E) SUBSTRATES AND FRAMING TO REMAIN TO RECEIVE (N) WORK. U.O.N. )N) FINISHES, SYSTEMS AND COMPONENTS SHALL BE COORDINATED WITH, CONNECT TO, MATCH AND CONFORM TO (E) FINISHES, SYSTEMS AND COMPONENTS TO REMAIN.
32. PROVIDE FLOOR FILLER AND FEATHERING COMPOUNDS TO CONCRETE SLAB FLOORS WHERE FLOOR IS UNEVEN, EXHIBITS DIVOTS OR SPALLING, AND AT OTHER LOCATIONS WHERE EXISTING CONDITIONS REQUIRE SAME TO PREPARE A LEVEL, SMOOTH, DURABLE AND CLEAN SURFACE COMPATIBLE WITH AND SUITABLE FOR RECEIVING NEW WORK SCHEDULED FOR THIS PROJECT. VERIFY MFR REQUIREMENTS AND COORDINATE.
33. REMOVE EXISTING WOOD OR RUBBER BASE AT ALL WALLS AND AT FIXED CASEWORK TO REMAIN.
34. DEMOLITION SHALL NOT BEGIN UNTIL ALL EXISTING PERTINENT UTILITIES HAVE BEEN IDENTIFIED AND WHERE DISCONNECTION MAY BE REQUIRED FOR SAFE EXECUTION OF THE WORK, U.O.N. THE DEMOLITION CONTRACTOR SHALL COORDINATE HIS WORK WITH THE GENERAL, ELECTRICAL, MECHANICAL, AND PLUMBING CONTRACTORS AND WITH THE BUILDING OCCUPANT/OWNER'S AGENT FOR THE PURPOSE OF DISCONNECTING AND INTERRUPTING POWER AND OTHER SERVICES WHICH MAY BE DISTURBED BY THE DEMOLITION. MAINTAIN EXISTING UTILITIES INDICATED TO REMAIN IN SERVICE AND PROTECT THEM AGAINST DAMAGE. DO NOT REMOVE UTILITY LINES SERVING OTHER PARTS OF THE BUILDING UNTIL NEW REPLACEMENT LINES ARE INSTALLED. REMOVE AND CAP UTILITIES CONCEALED BY NEW FINISHED SURFACES WHERE FIXTURES ARE DEMOLISHED.
35. IF PORTIONS OF BUILDING WILL BE OCCUPIED DURING DEMOLITION, CONDUCT DEMOLITION SO THAT OCCUPANTS OPERATIONS WILL NOT BE DISRUPTED. PROVIDE NOT LESS THAN 72 HOURS NOTICE TO BUILDING OWNER AND BUILDING BUSINESS OCCUPANTS OF ACTIVITIES THAT WILL AFFECT SUCH OCCUPANTS OPERATIONS. MAINTAIN ACCESS TO EXISTING WALKWAYS, CORRIDORS, PATHS OF EGRESS, ACCESSIBLE PATHS OF TRAVEL AND OTHER ADJACENT OCCUPIED OR USED FACILITIES. DO NOT CLOSE OR OBSTRUCT WALKWAYS, CORRIDORS, OR OTHER OCCUPIED OR USED FACILITIES WITHOUT WRITTEN PERMISSION FROM OWNER, AND WHERE NECESSARY, FROM AUTHORITIES HAVING JURISDICTION. CONTINUOUSLY MAINTAIN AND PROVIDE FOR CODE REQUIRED FIRE PROTECTION AND BUILDING SECURITY SYSTEM IN SERVICE DURING DEMOLITION OPERATIONS.
36. ALL EXISTING SURFACES, WALLS, DOORS, WINDOWS, FRAMES, HARDWARE, ETC., NOT SHOWN TO BE REMOVED OR ALTERED SHALL REMAIN. PROTECT ALL EXPOSED SURFACES / MATERIALS / EQUIPMENT INDICATED TO REMAIN FROM DAMAGE DUE TO CONSTRUCTION ACTIVITY. SURFACES / MATERIALS / EQUIPMENT DAMAGED BY CONSTRUCTION ACTIVITIES SHALL BE REPAIRED BY THE CONTRACTOR AT NO ADDITIONAL COST TO THE OWNER. INSTALL GENERAL PROTECTION MATERIALS AS NECESSARY PRIOR TO COMMENCING DEMOLITION WORK. AFTER DEMOLITION WORK IS COMPLETE, CONTRACTOR SHALL MEET WITH OWNERS REPRESENTATIVE TO REVIEW THE CONDITION OF ALL MATERIAL AND EQUIPMENT STORED FOR REUSE ON THIS PROJECT OR BY THE DISTRICT ON A SEPARATE PROJECT.
37. WHERE DEMOLITION EXPOSES CONCEALED AREAS WHERE DETERIORATION OR CHANGED CONDITIONS ARE ENCOUNTERED THE CONTRACTOR SHALL IMMEDIATELY NOTIFY THE OWNER IN WRITING DESCRIBING THE LOCATION AND EXTENT OF SUCH CONDITIONS. WAIT FOR INSTRUCTIONS FROM OWNER PRIOR TO PROCEEDING WITH WORK IN AFFECTED AREAS.
38. REPAIR DAMAGE TO ADJACENT CONSTRUCTION CAUSED BY SELECTIVE DEMOLITION AND RESTORE SURFACES INTENDED TO REMAIN. UNLESS OTHERWISE NOTED, USE REPAIR MATERIALS IDENTICAL TO EXISTING MATERIAL. PATCH WITH DURABLE SEAMS THAT ARE AS INVISIBLE OR UNOBTRUSIVE AS POSSIBLE TO THE SATISFACTION OF THE OWNER. WHERE PATCHING OCCURS IN A PAINTED SURFACE, APPLY PRIMER AND INTERMEDIATE PAINT COATS OVER PATCH AND APPLY FINAL PAINT COAT OVER ENTIRE UNBROKEN SURFACE CONTAINING PATCH. PROVIDE ADDITIONAL COATS UNTIL PATCH BLENDS WITH ADJACENT SURFACES.
39. DO NOT ALLOW DEMOLISHED MATERIALS TO ACCUMULATE ON-SITE. STORAGE OR SALE OF REMOVED ITEMS ON-SITE IS NOT PERMITTED. DO NOT SOIL ADJACENT SURFACES OR OTHER BUILDING AREAS. LEGALLY DISPOSE OF REMOVED MATERIALS.

# PLUMBING NOTES

1. THE CONTRACTOR SHALL CUT AND CAP PIPING WHERE FIXTURES ARE TO BE REMOVED COMPLETE. RE-ROUTE SUPPLY AND VENT PIPING AS NECESSARY.
2. THE CONTRACTOR SHALL RE-ROUTE SUPPLY, WASTE AND VENT PIPING AS INDICATED AND RE-CONNECT TO (N) AND RELOCATED FIXTURES, DRAINS, AND VENTS TO REMAIN. PIPING SHALL BE CONCEALED BENEATH FINISHES. NEATLY SAWCUT AND PATCH BACK EXISTING ELEMENTS SCHEDULED TO REMAIN TO ACCOMPLISH FINISH. COORDINATE ALL INVERTS, SLOPES TO DRAIN, TRAPS, ETC. PER CPC REQUIREMENT.

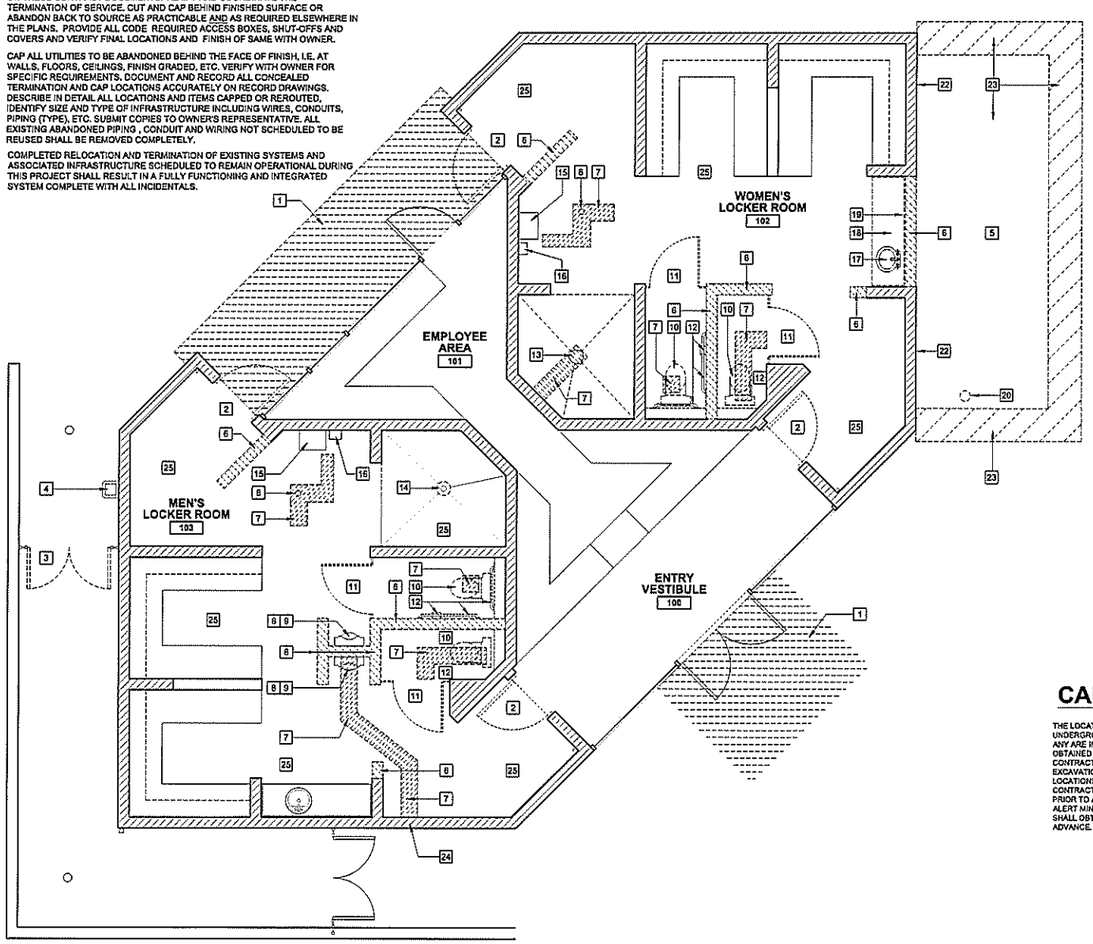


1 SITE / BUILDING DEMO PLAN
1" = 4'-0"

# CAUTION

THE LOCATIONS, SIZES AND/OR DEPTHS OF EXISTING UNDERGROUND UTILITIES ARE NOT SHOWN ON THIS PLAN. IF ANY ARE INDICATED SUCH INFORMATION HAS BEEN OBTAINED FROM SOURCES OF VARYING RELIABILITY. THE CONTRACTOR IS CAUTIONED THAT ONLY ACTUAL EXCAVATION WILL REVEAL THE TYPES, EXTENT, SIZES, LOCATIONS AND DEPTHS OF SUCH UNDERGROUND UTILITIES. CONTRACTOR SHALL FIELD VERIFY LOCATION AND DEPTH PRIOR TO ANY EXCAVATION OR IMPROVEMENT. CALL 811 DIG ALERT MIN 48 HRS PRIOR TO EXCAVATING. CONTRACTOR SHALL OBTAIN DIG ALERT TICKET FOR THIS PROJECT IN ADVANCE.

# SHEET KEY NOTES

1. SAWCUT NEATLY AT EDGES OF PAVEMENT TO REMAIN. REMOVE PAVEMENT COMPLETE IN AREA INDICATED. WHERE (N) FLATWORK IS SHOWN AND INDICATED PREPARE (E) GRAVEL BASE TO RECEIVE (N) WORK PER PLAN. EXCAVATE AND RE-GRADE TO A DEPTH READY TO RECEIVE (N) WORK. SEE DETAILS AS APPLY FOR PAVING SECTION. THICKENED EDGES, CURBS AND SLOPES AS NOTED AND IN COMPLIANCE WITH APPLICABLE STANDARDS. SEE CONSTRUCTION PLAN FOR ADDITIONAL INFORMATION.
2. REMOVE DOOR, DOOR HARDWARE, DOOR FRAME AND ANCHORS, THRESHOLD AND ANCHORS, AND ASSOCIATED SIGNS COMPLETE. PREPARE SUBSTRATE TO RECEIVE NEW WORK.
3. REMOVE CL GATE COMPLETE.
4. REMOVE DRINKING FOUNTAIN COMPLETE. CAP PIPING FLUSH TO OR RECESSED IN (E) FINISHED MASONRY WALL. PATCH WALL AND FINISH SMOOTH.
5. EXCAVATE FOR (N) FOOTING AND CONCRETE SLAB. COORDINATE TRENCHING AND THICKENED FLOOR SLAB FOR DRAIN PIPING. SEE SOILS REPORT AND STRUCTURAL PLANS.
6. NEATLY SAWCUT AND REMOVE PORTION INDICATED OF (E) MASONRY WALL.
7. NEATLY SAWCUT AND REMOVE PORTION INDICATED OF (E) MASONRY WALL.
8. REMOVE DRAIN AND CAP / RE-ROUTE WASTE PIPING.
9. REMOVE URINAL COMPLETE AND ASSOCIATED WATER SUPPLY PIPING.
10. REMOVE TOILET FIXTURE COMPLETE AND RE-ROUTE WATER SUPPLY AND WASTE PIPING.
11. REMOVE TOILET STALL PARTITION, DOOR AND ASSOCIATED HARDWARE AND ANCHORS COMPLETE..
12. REMOVE TOILET ROOM ACCESSORIES AND THEIR ANCHORS COMPLETE. TURN OVER TO OWNER'S REPRESENTATIVE.
13. REMOVE SHOWER COLUMN AND DRAIN COMPLETE. RE-ROUTE DRAIN PIPING AND WATER SUPPLY PIPING.
14. REMOVE SHOWER COLUMN COMPLETE. REMOVE OVERHEAD BRACE.
15. REMOVE FOLDING SHOWER SEAT AND GRAB BARS. SAVE FOR RE-USE.
16. REMOVE SHOWER VALVE CONTROL ASSEMBLY COMPLETE. RE-ROUTE PIPING. PATCH HOLES SMOOTH.
17. REMOVE LAVATORY COMPLETE. RE-ROUTE PIPING.
18. REMOVE COUNTER, SUPPORTS AND ANCHORS COMPLETE.
19. REMOVE MIRROR. SAVE FOR POSSIBLE RE-USE.
20. RELOCATE UTILITY BOX / VALVE AND RE-ROUTE (E) PIPING.
21. REMOVE DRAIN GRATE AND FLANGE. PREPARE TO RECEIVE (N) IN-KIND DRAIN GRATE.
22. REMOVE (E) WOOD SIDING AT UPPER PART OF (E) WALL (THIS FACE ONLY) AND PREPARE TO RECEIVE (N) WORK. CAREFULLY REMOVE FLASHING AT (E) ROOF EDGE TO ALLOW TIE-IN OF (N) ROOFING AND (N) FLASHING.
23. EXCAVATE FOR FOOTINGS, SLAB, DRAIN PIPING, ETC.
24. CORE DRILL CMU WALL (VERIFY LOCATION SO AS NOT TO CUT (E) WALL REINFORCING). COORDINATE LOCATION TO PROVIDE (N) WALL CLEAN OUT FOR (N) URINAL FIXTURE.
25. TEMPORARILY REMOVE (OR REPOSITION) (E) ITEMS SCHEDULED TO REMAIN SUCH AS, BUT NOT NECESSARILY LIMITED TO LIGHT FIXTURE LUMINARIES / TRIM, GRAB BARS, PAPER TOWEL AND SOAP DISPENSERS, FIXTURES AND OTHER MISC. SURFACE MOUNTD ITEMS, ELECTRICAL FINISH TRIM AND FLOOR DRAIN GRATES TO FACILITATE PREP AND APPLICATION OF (N) FLUID APPLIED EPOXY FLOOR FINISH, WALL AND CEILING PAINT, TRIM PAINT, ETC. PER SCHEDULE. TYPICAL.

# DEMO PLAN LEGEND

- (E) PARTIAL HT. CMU WALL TO BE REMOVED
- (E) C.M.U. WALL TO REMAIN
- (E) WALL TO REMAIN
- (E) C.M.U. WALL TO REMAIN
- APPROXIMATE EXTENT OF WALL TO BE REMOVED
- APPROXIMATE LOCATION AND EXTENT OF ITEM(S) TO BE REMOVED SHOWN DASHED
- APPROXIMATE EXTENT OF FLATWORK TO BE NEATLY SAWCUT AND REMOVED - DO NOT CUT THROUGH ANY FOUNDATION OR FOOTING TO REMAIN OR THROUGH ANY PIPING OR CONDUIT TO REMAIN. VERIFY ALL LOCATIONS AND CONDITIONS PRIOR TO CUTTING.
- DOOR TO BE REMOVED


Craig D. Williams
Architecture
Interiors
Planning
Project
Management

295 Neva Street
Sebastopol, CA
95472

(707) 823-2724
CASpAccess@gmail.com



COPYRIGHT AND CONDITIONAL RIGHT OF USE
Drawings, specifications and all ideas, designs, and arrangements indicated on these drawings and specifications are and shall remain the property of Craig Williams, architect and are intended to be used in connection with this specific project only; no part shall be copied or disclosed to others or otherwise be used in connection with any other work or project other than the specified scope of work for which they have been prepared without the prior written consent of the architect. There shall be no changes or deviations from these drawings or the accompanying specifications without the prior written consent of the Architect - the design professional in responsible charge.

THESE DRAWINGS ARE INSTRUMENTS OF SERVICE THE PROPERTY OF CRAIG D. WILLIAMS, ARCHITECT, COPYRIGHT © 2013-2016

Visual contact with these plans and specifications shall constitute conclusive evidence of acceptance of these restrictions.


CRAIG D. WILLIAMS

LICENSED ARCHITECT
CRAIG DOUGLAS WILLIAMS
No. C026642
REN. 10-31-17
STATE OF CALIFORNIA

08.30.2016

NOT FOR CONSTRUCTION UNLESS SIGNED BY THE ARCHITECT AND STAMPED APPROVED BY THE AUTHORITY HAVING JURISDICTION

AGENCY APPROVALS

ACCESSIBILITY UPGRADES
IVES POOL
AND POOL HOUSE
7400 WILLOW STREET
SEBASTOPOL, CA

PROJECT NUMBER:
082515.00
DATE:
30 AUGUST, 2016
DRAWN BY:
CHECKED BY:
CW
REVISIONS:

BUILDING DEMO PLAN

A1.1


© THESE DRAWINGS ARE INSTRUMENTS OF SERVICE AND ARE THE SOLE PROPERTY OF CRAIG WILLIAMS ARCHITECT. ANY USE WITHOUT WRITTEN CONSENT IS PROHIBITED.



Aug 31, 2016 - 7:24am cwilliams C:\Documents and Settings\cwilliams\Desktop\CLIENTS\SEBASTOPOL CITY\IVES\CD-A1.1.DWG

## DOOR GENERAL NOTES

1. INTERIOR AND EXTERIOR EXIT DOORS SHALL BE OPERABLE FROM THE INSIDE WITHOUT THE USE OF A KEY OR ANY SPECIAL KNOWLEDGE OR EFFORT.
2. PROVIDE LEVER TYPE HARDWARE IN ACCORDANCE WITH TITLE 24 AND ADA ACCESSIBILITY REQUIREMENTS FOR DOORS EQUIPPED WITH UNLATCHING HARDWARE. LEVER ACTIVATING HARDWARE, WHERE REQUIRED, SHALL RETURN TO WITHIN 1/2" OF FACE OF DOOR TO COMPLY WITH STATE FIRE MARSHALL REQUIREMENTS.
3. EFFORT TO OPERATE DOOR(S) SHALL BE: MAXIMUM 5 lbs. AT EXTERIOR DOOR(S); 5 lbs. AT INTERIOR DOOR(S); FIRE DOOR(S) MAY NOT EXCEED 15 lbs.
4. ALL HARDWARE SHALL CONFORM TO TITLE 24, CALIF. FIRE MARSHAL AND ACCESSIBILITY REQUIREMENTS. HAND ACTIVATED HARDWARE SHALL BE OPERABLE WITH ONE HAND, UNLOCK AND UNLATCH THE DOOR IN SINGLE ACTION, SHALL NOT REQUIRE TIGHT GRASPING, PINCHING OR TWISTING OF THE WRIST OR AN EFFORT REQUIRING GREATER THAN 5 LBS OF EFFORT TO OPERATE.
5. ALL (N) DOORS AND DOOR FRAMES SHALL BE REINFORCED FIBERGLASS TYPE. FRAMES SHALL BE FINISHED TO MATCH CORRESPONDING DOOR.
6. CONTRACTOR TO FIELD VERIFY ALL DOOR AND DOOR FRAME DIMENSIONS PRIOR TO FABRICATION.
7. (N) DOORS AND ASSOCIATED FRAMES ARE TO BE FACTORY FINISHED. CONTRACTOR TO FIELD VERIFY DOOR FINISH AND COLORS WITH ARCHITECT AND OWNER PRIOR TO PROCUREMENT OF DOORS. DOORS PROVIDED OUT OF COMPLIANCE WITH DOOR FINISH SCHEDULE SHALL BE REPLACED AT NO ADDITIONAL COST TO OWNER.
8. ALL GLAZING IN DOORS AND SIDELIGHTS SHALL BE TEMPERED SAFETY GLASS. LABELS "BUGS" INDICATING SAME SHALL BE PERMANENT PART OF GLAZING AND VIEWABLE AS PART OF THE FINISHED ASSEMBLY.
9. POST A SIGN ABOVE THE MAIN ENTRY DOOR STATING:" THIS DOOR TO REMAIN UNLOCKED WHILE BUILDING IS OCCUPIED"; CHARACTERS SHALL BE SAN-SERIF, UPPER CASE LETTERS 1" MIN IN HEIGHT, BLACK LETTERS ON WHITE BACKGROUND.

## FIXTURE SCHEDULE

WC-1 KOHLER KINGSTON K-4325-L WHITE W/ K-4731 COMMERCIAL SEAT WHITE ELONGATED BOWL. COMPLETE WITH SEATS AND FLUSHOMETER. SEAT AT 17-19" A.F.F., LOW-FLOW. FLUSH ON WIDE SIDE.

UR-1 KOHLER BARDON K-4991-ER HIGH EFFICIENCY URINAL - WHITE - COMPLETE WITH FLUSHOMETER

FLUSHOMETERS: SLOAN ROYAL 111-1.28 TP

LAV-1 - REUSE EXISTING

## FIXTURE AND ACCESSORY NOTES

TOILET ROOM ACCESSORIES:

1. ACCESSIBLE TOILET PAPER DISPENSER: BOBRICK 4288 SURFACE MOUNTED DUAL ROLL / SEAT COVER AND TOILET TISSUE DISPENSER, 304 STAINLESS STL SATIN FINISH.
2. ACCESSIBLE SURFACE MOUNTED PAPER TOWEL DISPENSER - REUSE (E)
3. ACCESSIBLE SOAP DISPENSER: REUSE (E)
4. MIRROR B-165 SERIES BY BOBRICK OR EQUAL: 24" X 36"
5. GRAB BARS -BOBRICK B-5806 304 STAINLESS STL, SATIN REAR 5806 x 42 / SIDE 5806 x 48
6. INSTALL ACCESSORIES AT LOCATIONS AND HEIGHTS INDICATED, STRAIGHT, PLUMB AND LEVEL AND IN ACCORDANCE WITH MANUFACTURER'S INSTALLATION INSTRUCTIONS.
7. INSTALL ITEMS WITH NON-CORROSIVE ANCHORING DEVICES - STAINLESS STEEL. PROVIDE SOLID STRUCTURAL BACKING AND ANCHORS FOR ALL ACCESSORIES, PARTITIONS, FIXTURES, AND EQUIPMENT.
8. INSTALLATION METHODS SHALL CONFORM TO MANUFACTURERS RECOMMENDATIONS FOR BACKING AND PROPER SUPPORT.
9. CONCEAL EVIDENCE OF DRILLING, CUTTING, AND FITTING TO ROOM FINISH.
10. FIT FLANGES OF ACCESSORIES SNUGLY TO WALL SURFACES.
11. WATER AND MOISTURE PROOF AND SEAL ALL PENETRATIONS.

## SIGN LEGEND

(# - X) WHEN A SIGN TYPE IS NOTED THE TYPE WILL BE INDICATED AFTER THE SIGN NUMBER WITH A LETTER (SUCH AS 'X' IN THE EXAMPLE TO THE LEFT) INDICATING THE SIGN TYPE AS NOTED IN THE REFERENCED DETAIL.

(1-X) ENTRANCE SIGN W/ISA - SEE ACCESSIBLE SIGN REQUIREMENTS SHEET A3.1 [CBC 11B-216.5; CBC 11B-502.6]

(2-X) TACTILE EXIT SIGN - SEE DETAILS 4/A3.1 AND 5/A3.1 [CBC 1011.4; CBC 11B-703]

(3-X) SANITARY FACILITY WALL MOUNTED SIGN - SEE DETAILS 5/A3.1 AND 7/A3.1 [CBC 1011.4; CBC 11B-703]

(4-X) SANITARY FACILITY DOOR MOUNTED SIGN - SEE DETAILS 5/A3.1 AND 9/A3.1 [CBC 1011.4; CBC 11B-703]

## SIGN NOTES

1. ALL SIGNS SHALL BE PER ACCESSIBILITY CODES, 11B-307.3; 11B-216 AND 11B-703; 2013 CBC; AND 216 AND 703 2010 ADAS.
2. PROVIDE SUBMITTAL FOR ALL SIGNS TO BE REVIEWED AND APPROVED BY OWNER AND ARCHITECT IN WRITING PRIOR TO PROCUREMENT
3. ALL GRAPHICS, COPY, FONT, COLOR, CONTRAST, SIZE, CONFIGURATION, AND CALIFORNIA CONTRACTED TYPE II BRAILLE ON ALL SIGNAGE SHALL CONFORM TO THE MOST STRINGENT REQUIREMENTS OF THE AMERICANS WITH DISABILITIES ACT (ADA) ACCESSIBILITY GUIDELINES AND WITH CBC, TITLE 24, C.C.R. FOR NEW BUILDING AND FACILITIES, CURRENT EDITION, U.O.N. (REFER TO MIN. ADA SIGN REQUIREMENT BELOW). SUBMIT SHOP DRAWINGS FOR APPROVAL BY ARCHITECT PRIOR TO FABRICATION.
4. ALL SIGNAGE SHALL BE DONE BY A SINGLE SIGN MANUFACTURER AND REVIEWED BY THE ARCHITECT BEFORE FABRICATION.

## DOOR SCHEDULE

(1) (E) PR 3068 STOREFRONT TYPE DOOR.

PROVIDE (N) 10" HIGH x FULL WIDTH OF DOOR KICK PLATES AND TOP OF KICK PLATE CLOSURE ON BOTH FACES OF BOTH LEAVES. MATCH COLOR AS CLOSELY AS PRACTICABLE. SEE DETAIL 20/A3.5.

REMOVE HOLD OPEN DEVICES WITHIN 10" OF BOTTOM OF DOOR.

ADJUST AUTOMATIC CLOSER - ADJUST CLOSER TO CLOSE FROM A POSITION OF 90° OPEN TO 12° FROM THE LATCH IN 5 SECONDS MIN [CBC 11B-404.2.8] AND REQUIRING AN EFFORT NOT TO EXCEED 5 LBS. [CBC 11B-404.2.9].

PROVIDE ISA DOOR AND WALL MOUNTED TACTILE EXIT SIGNS PER SIGN SCHEDULE.

(2)(3)(4)(5) (N) 3068 REINFORCED FIBERGLASS DOOR AND FIBERGLASS DOOR FRAME.

SPECIAL-LITE OR APPROVED EQUAL. AF-200 W/ 6 LB / CU. FT. URETHANE. UV STABILIZED, SMOOTH FINISH WITH INTEGRAL COLOR. COLOR AS SELECTED BY OWNER FROM MFR'S STANDARD COLOR SELECTION.

(N) HEAVY DUTY CONTINUOUS STAINLESS STEEL HINGE.

(N) KICK PLATES - STAINLESS STEEL, 050" THICK, 10" HEIGHT.

(N) ACCESSIBLE THRESHOLD.

(N) DOOR CLOSER. LCN P4040XP, HAGAR 5200, NORTON 9540 SERIES (HEAVY DUTY). DOOR HOLD-OPEN AND BACK-SET FUNCTIONS, STAINLESS STEEL / ALUMINUM TRIM FINISH. ADJUST AUTOMATIC CLOSER - ADJUST CLOSER TO CLOSE FROM A POSITION OF 90° OPEN TO 12° FROM THE LATCH IN 5 SECONDS MIN [CBC 11B-404.2.8] AND REQUIRING AN EFFORT NOT TO EXCEED 5 LBS. [CBC 11B-404.2.9].

(N) STAINLESS STEEL (32D) ACCESSIBLE LOOP TYPE PULLS AND PUSH PLATES - THROUGH BOLTED SECURITY / TAMPER AND VANDAL RESITANT.

DEAD BOLT SHALL BE FULL MORTISE WITH ACCESSIBLE LEVER W/ 2-3/4" BACKSET. LEVER SHALL BVE ABLE TO BE OPERATED BY A HAND IN NEUTRAL POSITION (NOT REQUIRING PINCHING, TIGHT GRASPING OR TWISTING OF THE WRIST OR AN EFFORT REQUIRING MORE THAN 5 LBS TO OPERATE. PROVIDE VISIBLE LOCK POSITION INDICATOR.

PROVIDE TACTILE EXIT AND GENDERED SANITARY FACILITY SIGNS PER SIGN SCHEDULE.

(6) (E) 3068 STOREFRONT.

PROVIDE (N) 10" HIGH x FULL WIDTH OF DOOR KICK PLATES AND TOP OF KICK PLATE CLOSURE ON BOTH FACES OF BOTH LEAVES. MATCH COLOR AS CLOSELY AS PRACTICABLE. SEE DETAIL 20/A3.5.

REMOVE HOLD OPEN DEVICES WITHIN 10" OF BOTTOM OF DOOR.

ADJUST AUTOMATIC CLOSER - ADJUST CLOSER TO CLOSE FROM A POSITION OF 90° OPEN TO 12° FROM THE LATCH IN 5 SECONDS MIN [CBC 11B-404.2.8] AND REQUIRING AN EFFORT NOT TO EXCEED 5 LBS. [CBC 11B-404.2.9].

PROVIDE TACTILE EXIT SIGN PER SCHEDULE.

(7)(8) (N) UTILITY CHASE ACCESS DOOR - 3068 REINFORCED FIBERGLASS DOOR AND FIBERGLASS DOOR FRAME.

SPECIAL-LITE OR APPROVED EQUAL. AF-200 W/ 6 LB / CU. FT. URETHANE. UV STABILIZED, SMOOTH FINISH WITH INTEGRAL COLOR. COLOR AS SELECTED BY OWNER FROM MFR'S STANDARD COLOR SELECTION. INTEGRAL LOUVERS.

KEYED DEAD-BOLT.

(9) (N) CHAIN LINK GATE. (1) 3'-0" LEAF AND (1) 2'-0" LEAF. FABRICATE TO FIT (E) OPENING. VERIFY IN FIELD. MATCH (E) GATE HEIGHT.

PROVIDE BOTTOM CANE BOLT AT 2'-0" LEAF. PROVIDE ACCESSIBLE LEVER HARDWARE AT ACTIVE 3'-0" LEAF. SEE DETAIL

PROVIDE (N) LEVER HAND ACTIVATED HARDWARE. LEVER HANDLE SHALL RETURN TO WITHIN 1/2" OF FACE OF DOOR. SECURITY STOREROOM LOCK. FROM INSIDE ROOM LEVER SHALL UNLOCK AND UNLATCH IN ONE OPERATION REQUIRING ONLY ONE HAND WITHOUT PINCHING, TIGHT GRASPING OR TWISTING OF THE WRIST, AND AN EFFORT NOT EXCEEDING 5 LBS. UNLOCK DOOR WITH KEY FROM OUTSIDE OF ROOM. VERIFY SECURITY REQUIREMENTS WITH OWNER.

PROVIDE TACTILE EXIT SIGN PER SIGN SCHEDULE. LOCATE AT POOL SIDE OF GATE. MOUNT ON CMU WALL ADJACENT TO ACTIVE LEAF.

(10) (E) CHAIN LINK GATE. (PR) 2'-6". GATE IS UNLOCKED AND PLACED IN AN OPEN POSITION BY SITE ADMINISTRATION WHEN PROGRAMS AT THE SITE PREMISES ARE MADE AVAILABLE TO THE PUBLIC.

## SHEET KEY NOTES

1. (N) ACCESSIBLE CHAIN LINK GATE AND ACCESSIBLE HARDWARE. SEE DETAIL 20/A3.11.
2. (N) CONCRETE ACCESSIBLE LEVEL LANDING. SEE DETAIL 4/A3.3. FOR CONC. SEE DETAIL 5/A3.1.
3. (N) WHEELCHAIR ACCESSIBLE ROLL-IN SHOWER. SEE DETAILS SHEET A3.12.
4. (N) WHEELCHAIR ACCESSIBLE TOILET COMPARTMENT, WC-1 TOILET AND ACCESSORIES. SEE DETAIL 11/A3.8.
5. (N) TOILET COMPARTMENT, TOILET WC-1 AND ACCESSORIES.
6. (N) ACCESSIBLE URINAL UR-1 AND PRIVACY SCREEN.
7. (N) SHOWER COLUMN WITH 6 HEADS.
8. REUSE (E) ACCESSIBLE LAVATORIES AND MOUNT IN (N) PLAM COUNTER WITH 4" BACKSPLASH AT REAR AND SIDE RETURNS.
9. (N) ACCESSIBLE BENCH. MATCH EXISTING. (4) COAT HOOKS AT + 48" A.F.F.
10. (N) ACCESSIBLE PLAM COUNTER AT +34" A.F.F. PROVIDE 4" BACKSPALSH AT BACK AND SIDES.
11. (N) PARTIAL HEIGHT CMU WALL. MATCH HEIGHT OF SIMILAR (E) PARTIAL HEIGHT CMU WALLS IN ADJACENT LOCKER ROOM. SEAL AND PAINT. SEE FINISH PLAN AND RELATED SCHEDULE.
12. (N) METAL FRAMED FURRING WALL ON 6" CONC. CURB. CONCEAL PIPING IN WALL.
13. (N) UTILITY SPACE WITH ACCESS DOOR.
14. (N) UTILITY SPACE WITH ACCESS DOOR.
15. (N) CMU WALL - MATCH AND ALIGN W/ (E).
16. (N) SAN. SWR. CLEAN OUT W/ GRADE BOX AND LID.
17. SLOPE FLOOR 1.5% TO DRAIN (2% MAX PERISSIBLE).
18. (N) FLOOR DRAIN AND FLOOR DRAIN GRATE. GRATE SHALL NOT HAVE OPENINGS GREATER THAN 1/4". SEAL.
19. (N) 5" MIN. THK. CONC. SLAB FLOOR OVER 10 MIL MIN CONTINUOUS SHEET MEMBRANE OVER 2" BEDDING SAND OVER 10" MIN COMPACTED 3/4" FREE DRAINING ROCK BASE.
20. (N) 8x8x16 C.M.U. WALL - REINFORCED AND FULLY GROUTED.
21. (N) HD GALV. DOWNSPOUT. MATCH (E). PAINT. (N) GUTTER ABOVE). TERMINATE DOWN SPOUT AT GRADE INTO PRE-CAST CONC. SPLASH BLOCK. 18" DIAM. x 24" DEEP GRAVEL DISSIPATOR.
22. (N) ACCESSIBLE CHAIN LINK GATE AND ACCESSIBLE HARDWARE. SEE DETAIL 20/A3.11.
23. (N) CONCRETE ACCESSIBLE LEVEL LANDING. SEE DETAIL 4/A3.3. FOR CONC. SEE DETAIL 5/A3.1.

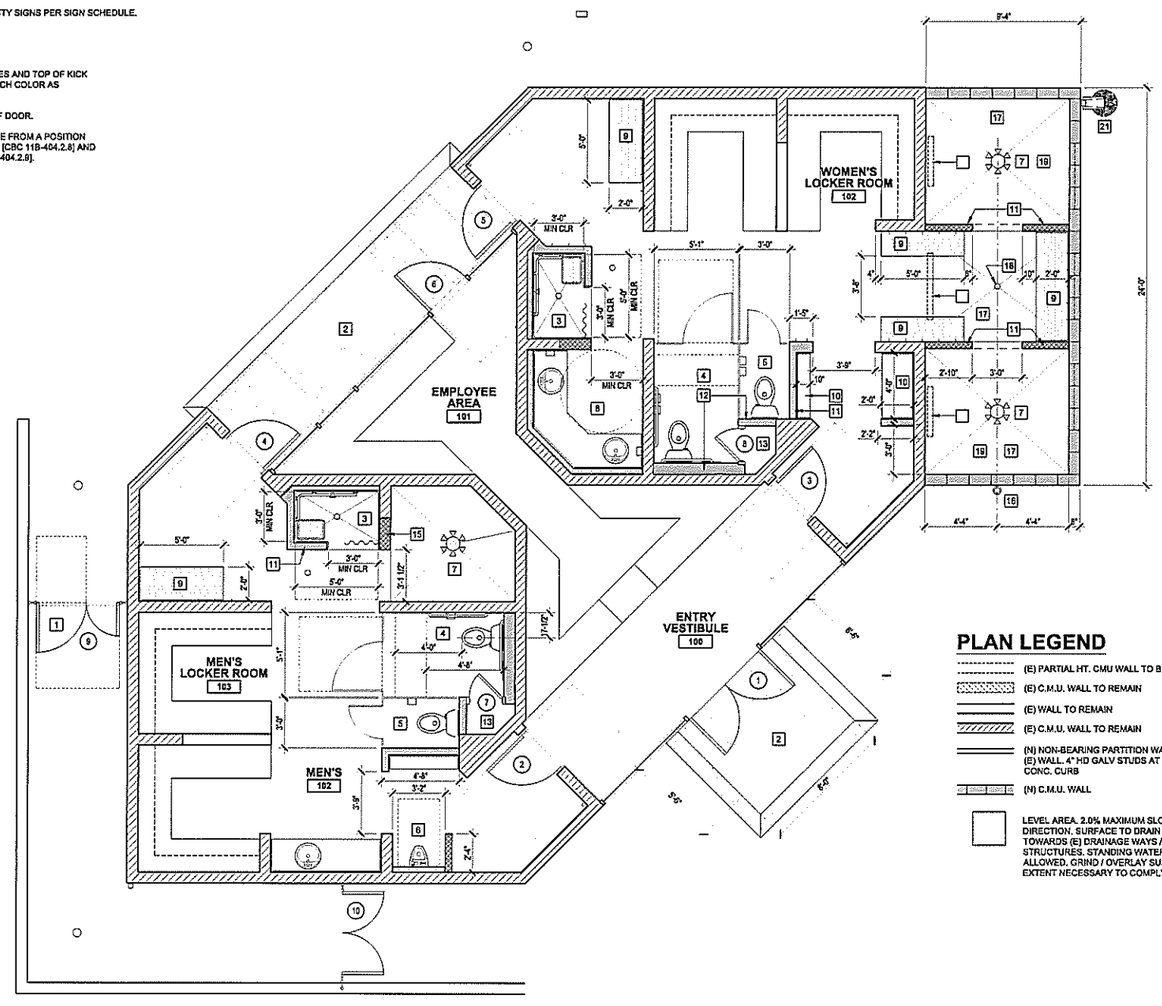


## PLAN LEGEND

- (E) PARTIAL HT. CMU WALL TO BE REMOVED
- (E) C.M.U. WALL TO REMAIN
- (E) WALL TO REMAIN
- (E) C.M.U. WALL TO REMAIN
- (N) NON-BEARING PARTITION WALL OR INFILL AT (E) WALL. 4" HD GALV STUDS AT 16"oc. ON (N) CONC. CURB
- (N) C.M.U. WALL

LEVEL AREA. 2.0% MAXIMUM SLOPE IN ANY DIRECTION. SURFACE TO DRAIN WATER TOWARDS (E) DRAINAGE WAYS / DRAINAGE STRUCTURES. STANDING WATER NOT ALLOWED. GRIND / OVERLAY SURFACES TO EXTENT NECESSARY TO COMPLY.

## 1 SITE / BUILDING FLOOR PLAN

1" = 4'-0"


Craig D. Williams
Architecture
Interiors
Planning
Project
Management

295 Neva Street
Sebastopol, CA
95472

(707) 823-2724
CASpAccess@gmail.com



COPYRIGHT AND CONVENTIONAL RIGHT OF USE

Drawings, specifications and all ideas, designs, and arrangements indicated on these drawings and specifications are and shall remain the property of Craig Williams, architect and are intended to be used in connection with this specific project only. No part shall be copied or disclosed to others or otherwise be used in connection with any other work or project other than the specified scope of work for which they have been prepared without the prior written consent of the architect. There shall be no changes or deviations from these drawings or the accompanying specifications without the prior written consent of the Architect - the design professional in responsible charge.

THESE DRAWINGS ARE INSTRUMENTS OF SERVICE THE PROPERTY OF CRAIG D. WILLIAMS, ARCHITECT, COPYRIGHT © 2015-2018

Visual contact with these plans and specifications shall constitute conclusive evidence of acceptance of these restrictions.


CRAIG D. WILLIAMS

LICENSED ARCHITECT CRAIG DOUGLAS WILLIAMS No. C026642 REN. 10-31-17 STATE OF CALIFORNIA

08.30.2016

NOT FOR CONSTRUCTION UNLESS SIGNED BY THE ARCHITECT AND STAMPED APPROVED BY THE AUTHORITY HAVING JURISDICTION

AGENCY APPROVALS

# ACCESSIBILITY UPGRADES IVES POOL AND POOL HOUSE

7400 WILLOW STREET
SEBASTOPOL, CA

PROJECT NUMBER: 082515.00
DATE: 30 AUGUST, 2016
DRAWN BY: CW
CHECKED BY: CW
REVISIONS:

BUILDING FLOOR PLAN

**A1.2**


© THESE DRAWINGS ARE INSTRUMENTS OF SERVICE AND ARE THE SOLE PROPERTY OF CRAIG WILLIAMS ARCHITECT AND MAY NOT BE REPRODUCED WITHOUT WRITTEN CONSENT IS PROHIBITED.



Aug 31, 2016 - 12:15pm cwilliams C:\Documents and Settings\cwilliams\Desktop\CLIENTS\SEBASTOPOL CITY\VESCID-A1.2.dwg

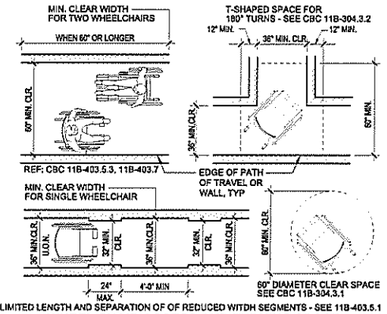


LIMITED LENGTH AND SEPARATION OF OF REDUCED WITDH SEGMENTS - SEE 11B-403.5.1

## 17 WHEEL CHAIR ACCESS AND TURNING SPACE PATH OF TRAVEL CLEARANCES

REF: CBC 11B-403, 11B-403.5.1 EXCEPTIONS, 11B-403.5.2, 11B-402.5.3.
1/4" = 1'-0" 01-001

TURN-AROUND CLEARANCE:

5'-0"Ø CLEAR TURN-AROUND AREA. NO DOOR SWINGS OTHER THAN TOILET ROOM ENTRANCE DOOR SWINGS MAY ENCROACH INTO THIS CLEAR SPACE - MAX ENCROACHMENT 12". SEE CBC 11B-304.3.1.

CLEARANCE AT ACCESSIBLE ELEMENTS: CBC 11B-305

30"x48" CLEAR AREA IN FRONT OF ACCESSIBLE ELEMENT SEE 30/A9.4 ALSO FOR KNEE CLEARANCE REQUIREMENTS.

PULL SIDE DOOR CLEARANCE - EXTERIOR FRONT APPROACH:

24" x 60" MIN. CLEAR AREA AT STRIKE SIDE OF DOOR
SEE CBC TABLE 11B-404.2.4.1.

PULL SIDE DOOR CLEARANCE - INTERIOR FRONT APPROACH:

18" x 60" MIN. CLEAR AREA AT STRIKE SIDE OF DOOR
SEE CBC TABLE 11B-404.2.4.1.

PUSH SIDE DOOR CLEARANCE - INTERIOR FRONT APPROACH:

12" x 48" MIN. CLEAR AREA AT STRIKE SIDE OF DOOR
SEE CBC TABLE 11B-404.2.4.1.

CLEARANCES ARE MINIMUM REQUIRED AT DOORS EQUIPPED WITH BOTH A LATCH AND AN AUTOMATIC CLOSER. CLEARANCES ARE AS MEASURED FROM FACE OF FINISH. COORDINATE WITH DIMENSIONS ON PLANS AND INTERIOR ELEVATIONS. REPORT ANY DISCREPANCIES TO ARCHITECT PRIOR TO PROCEEDING WITH AFFECTED WORK. VERIFY CONDITIONS. NOTE: LATCH SIDE AND HINGE SIDE APPROACHES OR AT DOORS LOCATED AT RAMP LANDINGS, ADDITIONAL WHEELCHAIR MANEUVERING SPACE REQUIREMENTS APPLY. SEE CBC 11B-404.2.4.1 AND 11B-405.7.5.

## 18 ACCESS. CLEARANCE SYMBOL LEGEND

1/8" = 1'-0" 01-002

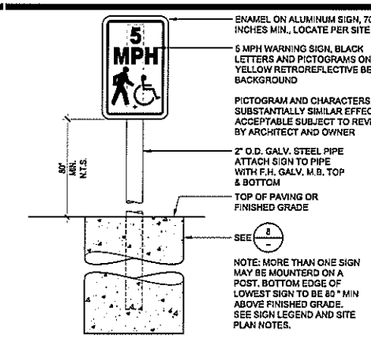


## 13 ACCESSIBLE PARKING SIGN

1 1/2" = 1'-0" 02-006B

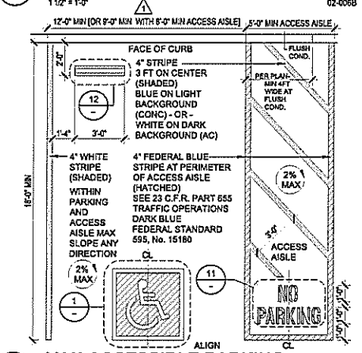


## 14 VAN ACCESSIBLE PARKING

1/4" = 1'-0" CBC 11B-502 PARKING - VAN ACCESSIBLE - SINGLE -2013

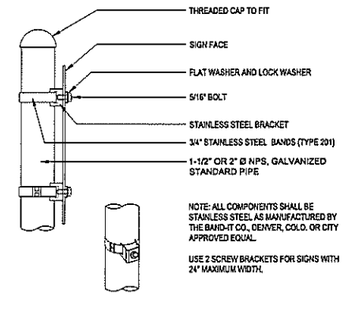


## 9 MOUNTING SIGN ON STEEL POLE

NOT TO SCALE 08/21/03 13:30 10-200

NOTE: RESTRICTED PARKING SIGN(S) PER CBC-11B-502.8.2 SHALL BE POSTED CONSPICUOUSLY AT EACH PARKING LOT ENTRY -OR- AT EACH ACCESSIBLE PARKING AREA WHERE THE SIGN CAN BE SEEN FROM EACH INDIVIDUAL PARKING STALL IN THAT AREA. 80" MINIMUM TO BOTTOM OF SIGN, TYPICAL.

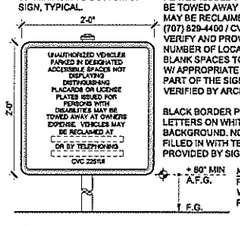


CALTRANS R100-B: OFF-STREET PARKING FACILITIES TO BE PROVIDED WITH WARNING SIGN W/ BLACK LETTERS ON WHITE REFLECTORIZED BACKGROUND AT EVERY PARKING LOT ENTRANCE - NOT LESS THAN 24" x 24" IN SIZE. SIGN TEXT SHALL BE 1" HIGH LETTERS ON BEADED / REFLECTORIZED BACKGROUND AND SHALL STATE THE FOLLOWING: "UNAUTHORIZED VEHICLES PARKED IN DESIGNATED ACCESSIBLE SPACES NOT DISPLAYING DISTINGUISHING PLACARDS OR LICENSE PLATES ISSUED FOR PERSONS WITH DISABILITIES WILL BE TOWED AWAY AT OWNERS EXPENSE. VEHICLES MAY BE RECLAIMED AT _____ OR BY TELEPHONING (707) 829-4400 / CVC 22511.8."
VERIFY AND PROVIDE 24/7 DISPATCH TELEPHONE NUMBER OF LOCAL LAW ENFORGEMENT (707) 829-4400).
BLANK SPACES TO BE FILLED IN BY SIGN FABRICATOR W/ APPROPRIATE INFORMATION AS A PERMANENT PART OF THE SIGN, COPY AND FORMAT TO BE VERIFIED BY ARCHITECT PRIOR TO FABRICATION.

BLACK BORDER PLUS BLACK 1" HIGH SAN-SERIF LETTERS ON WHITE RETRO-REFLECTORIZING BACKGROUND. NOTE: SIGN WITHOUT INFORMATION FILLED IN WITH TEXT MATCHING THAT ON SIGN PROVIDED BY SIGN FABRICATOR WILL BE REJECTED

NOTE: SIGNS TO BE 0.125" THICK RETROREFLECTORIZED ALUMINUM W/ BAKED PORCELAIN ENAMEL FINISH, TYP. U.O.N.

## 10 RESTRICTED PARKING SIGN

1" = 1'-0" 02-079-D

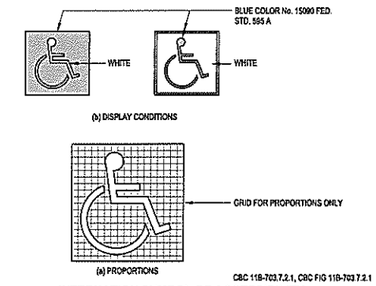


## 5 INTERNATION SYMBOL OF ACCESSIBILITY WHEELCHAIR PICTOGRAM

NO SCALE 10-031

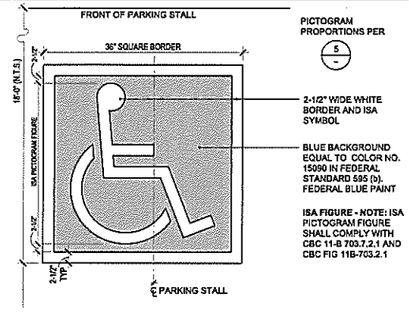


## 1 ACCESSIBLE PARKING SYMBOL

1" = 1'-0" 02-080B

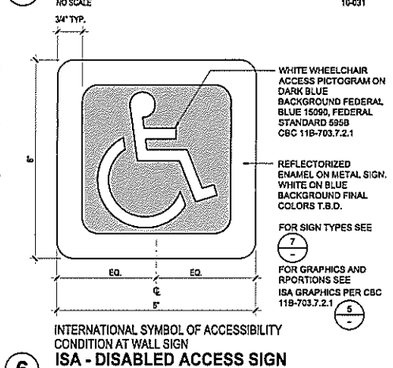


INTERNATIONAL SYMBOL OF ACCESSIBILITY CONDITION AT WALL SIGN

## 6 ISA - DISABLED ACCESS SIGN

HALF SCALE 10-094

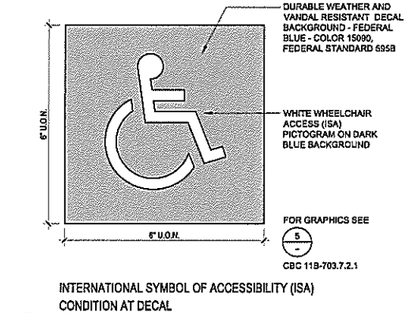


INTERNATIONAL SYMBOL OF ACCESSIBILITY (ISA) CONDITION AT DECAL

## 2 ISA - DISABLED ACCESS SIGN

HALF SCALE 10-011

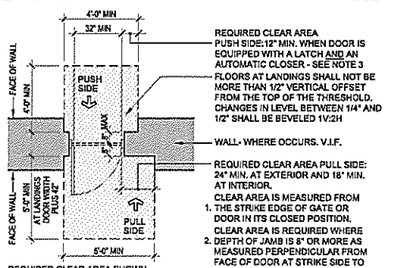


WHEEL CHAIR ACCESS AT DOORS AND LANDINGS

## 19 ACCESSIBILITY CLEARANCES

1/4" = 1'-0" REF: CBC 11B-404.2.4.1 01-003

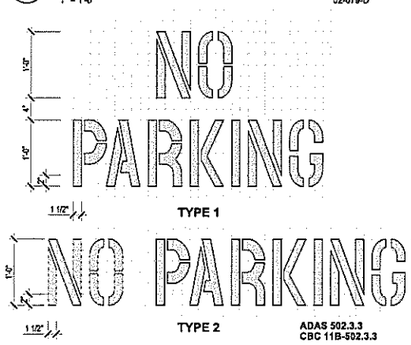


## 11 NO PARKING MARKINGS

1" = 1'-0" NO PARKING 1

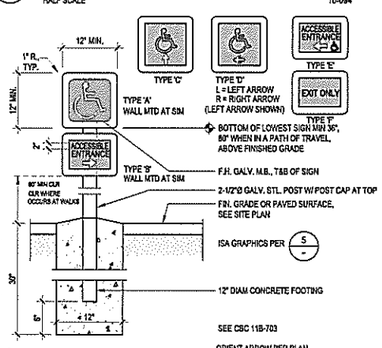


## 7 SIGNS

1" = 1'-0" 02-003

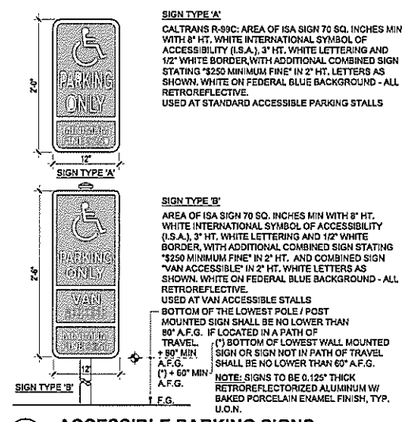


SIGN TYPE 'A'

CALTRANS R-99C: AREA OF ISA SIGN 70 SQ. INCHES MIN WITH 8" HT. WHITE INTERNATIONAL SYMBOL OF ACCESSIBILITY (I.S.A.), 3" HT. WHITE LETTERING AND 1/2" WHITE BORDER,WITH ADDITIONAL COMBINED SIGN STATING "$250 MINIMUM FINE" IN 2" HT. LETTERS AS SHOWN. WHITE ON FEDERAL BLUE BACKGROUND - ALL RETROREFLECTIVE.
USED AT STANDARD ACCESSIBLE PARKING STALLS

SIGN TYPE 'B'

AREA OF ISA SIGN 70 SQ. INCHES MIN WITH 8" HT. WHITE INTERNATIONAL SYMBOL OF ACCESSIBILITY (I.S.A.), 3" HT. WHITE LETTERING AND 1/2" WHITE BORDER, WITH ADDITIONAL COMBINED SIGN STATING "$250 MINIMUM FINE" IN 2" HT. AND COMBINED SIGN "VAN ACCESSIBLE" IN 2" HT. WHITE LETTERS AS SHOWN. WHITE ON FEDERAL BLUE BACKGROUND - ALL RETROREFLECTIVE.
USED AT VAN ACCESSIBLE STALLS
BOTTOM OF THE LOWEST POLE / POST MOUNTED SIGN SHALL BE NO LOWER THAN 80" A.F.G. IF LOCATED IN A PATH OF TRAVEL. (*) BOTTOM OF LOWEST WALL MOUNTED SIGN OR SIGN NOT IN PATH OF TRAVEL SHALL BE NO LOWER THAN 60" A.F.G.
NOTE: SIGNS TO BE 0.125" THICK RETRORFLECTORIZED ALUMINUM W/ BAKED PORCELAIN ENAMEL FINISH, TYP. U.O.N.

## 4 ACCESSIBLE PARKING SIGNS

1" = 1'-0" REF: CBC 11B-502.6, 11B-703.7.2.1 02-070-F

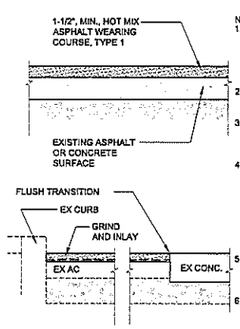


NOTE:
1. THE AREA DESIGNATED FOR PAVEMENT OVERLAY SHALL BE CLEANED OF ALL DIRT, DUST, AND DEBRIS TO THE SATISFACTION OF THE OWNER PRIOR TO APPLYING THE OVERLAY.
2. THE OVERLAY SHALL EXTEND FULL WIDTH OF AREA SHEDULED FOR OVERLAY / RESURFACING.
3. BLEND TO EXISTING PAVEMENT GRADES AT TIE-IN POINTS AND LOCATIONS WHERE EXISTING LEVEL REMAINS. VERIFY.
4. FINISH PAVEMENT GRADE TO BE ADJUSTED AS NECEESARY FOR PROPER DRAINAGE (1.5% MIN); STANDING WATER NOT ALLOWED. PAVEMENT SLOPES ARE ALSO REQUIRED TO MEET ALL ACCESSIBILITY STANDARDS AT ACCESSIBLE PARKING AND PATH OF TRAVEL.
5. APPLY A LEVELING COURSE WHERE NEEDED TO ACCOMPLISH A SMOOTH AND UNIFORM SURFACE.
6. RESET UTILITY LIDS AND FLANGES AS NECESSARY.

## 16 PAVEMENT RESURFACING OVERLAY DETAIL

3/4" = 1'-0" 02-103-C

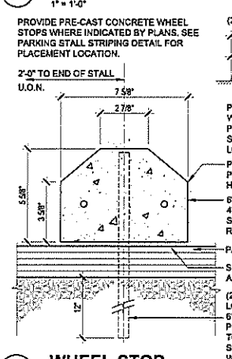


(2) 3'-0" AT ACCESSIBLE STALLS
(1) 3'-0" AT REGULAR STALLS
9"

PROVIDE PRE-CAST CONCRETE WHEEL STOPS WHERE INDICATED BY PLANS. SEE PARKING STALL STRIPING DETAIL FOR PLACEMENT LOCATION.

PAINT WITH WHITE REFLECTORIZED PAINT COATING TO MINIMIZE TRIPPING HAZARD.
6'-0" LONG ACCESSIBLE STALLS OR 4'-0" LONG FOR STANDARD SINGLE STALLS - USE PRECAST CONC. REINFORCE w/(2) # 3 BARS
PAVING OVER BASE ROCK
SET WHEEL STOP IN FULL BED OF APPROVED MASTIC
(2) 3/4" DIA. GALV. STL. RODS x 24" LONG SET 9" FROM E.E. AT 6'-0" AND 6" FROM E.E. AT 3'-0", SECURING PINS SHALL BE DRIVEN 1/4" BELOW TOP SURFACE OF CONC. WHEEL STOP AND FILLED FLUSH WITH WATERPROOF SEALANT.

## 12 WHEEL STOP

3" = 1'-0" 08/21/03 13:30 02-094

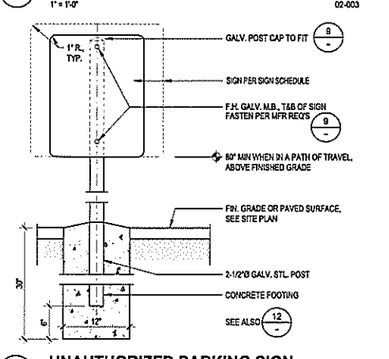


## 8 UNAUTHORIZED PARKING SIGN

1" = 1'-0" 02-005A


Craig D. Williams
Architecture
Interiors
Planning
Project
Management

295 Nava Street
Sebastopol, CA
95472

(707) 823-2724
CASpAccess@gmail.com



COPYRIGHT AND CONDITIONAL RIGHT OF USE
Drawings, specifications and all ideas, designs, and arrangements indicated on these drawings and specifications are and shall remain the property of Craig Williams, architect and are intended to be used in connection with this specific project only. No part shall be copied or disclosed to others or otherwise be used in connection with any other work or project other than the specified scope of work for which they have been prepared without the prior written consent of the architect. There shall be no changes or deviations from these drawings or the accompanying specifications without the prior written consent of the Architect - the design professional in responsible charge.

THESE DRAWINGS ARE INSTRUMENTS OF SERVICE THE PROPERTY OF CRAIG D. WILLIAMS, ARCHITECT, COPYRIGHT© 2015-2016

Visual contact with these plans and specifications shall constitute conclusive evidence of acceptance of these restrictions.


CRAIG D. WILLIAMS

LICENSED ARCHITECT CRAIG DOUGLAS WILLIAMS No. C026542 REN. 10-31-17 STATE OF CALIFORNIA

08/21/2016

NOT FOR CONSTRUCTION UNLESS SIGNED BY THE ARCHITECT AND STAMPED APPROVED BY THE AUTHORITY HAVING JURISDICTION

AGENCY APPROVALS

ACCESSIBILITY UPGRADES
IVES POOL
AND POOL HOUSE
7400 WILLOW STREET
SEBASTOPOL, CA

PROJECT NUMBER: 082515.00
DATE: 28 JULY, 2016
DRAWN BY: VW
CHECKED BY: CW
REVISIONS:

SITE DETAILS
NOTES

**A3.0**


© THESE DRAWINGS ARE INSTRUMENTS OF SERVICE AND ARE THE SOLE PROPERTY OF CRAIG WILLIAMS ARCHITECT. ANYUSE WITHOUT WRITTEN CONSENT IS PROHIBITED.



Aug 23, 2016 - 8:07am cwilliams C:\Documents and Settings\cwilliams\Desktop\CLIENTS\SEBASTOPOL CITY\IVES\ISD-A3.0.DWG

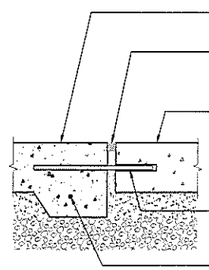


## 17 CONDITION AT NEW TO EXISTING CONCRETE FLATWORK

1-1/2" = 1'-0" 03-003

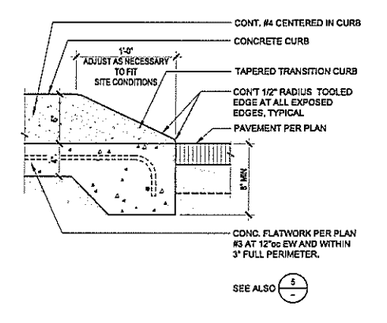


## 13 TAPERED CURB

1-1/2" = 1'-0" 02-095-A

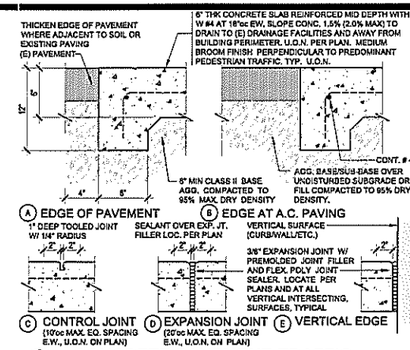


## 9 CONCRETE PAVEMENT-TRAFFIC

1-1/2" = 1'-0" SEE PAVING REQUIREMENT NOTES AND DETAILS 5 & 6 THIS SHEET ALSO 02-004

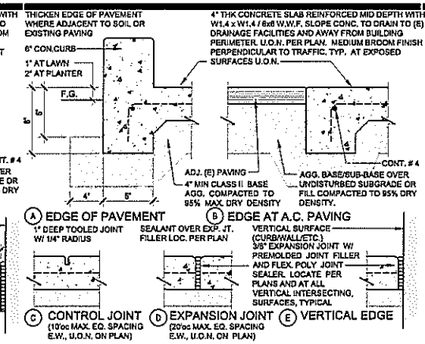


## 5 TYPICAL CONCRETE WALK DETAILS

1-1/2" = 1'-0" SEE PAVING REQUIREMENT NOTES THIS SHEET AND NOTES SJHEET T0.5 ALSO 02-004-C

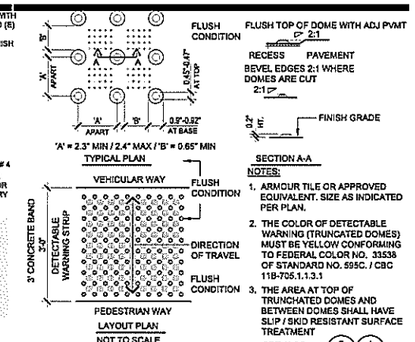


## 1 TRUNCATED DOMES

3" = 1'-0" REF: CBC 11B-705.1.1 11B-705.1.2 02-131-A

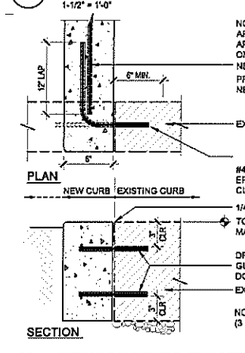


## 18 NEW CURB TO EXISTING CURB

1-1/2" = 1'-0" 02-087

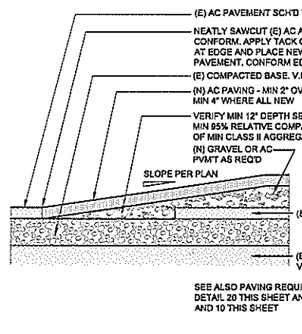


## 14 NEW AC PAVING TO EXISTING PAVING

NO SCALE 02-040

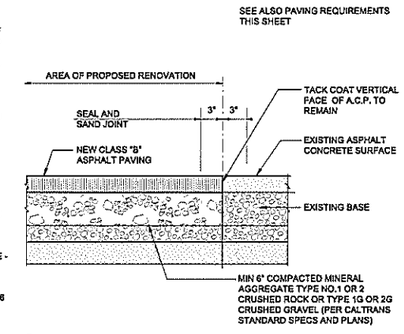


## 10 ASPHALT PATCH

1" = 1'-0" 02-036

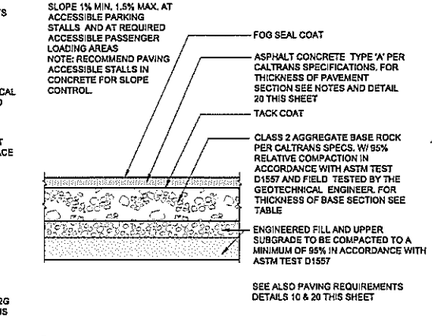


## 6 AC PAVING SECTION

NO SCALE 02-041

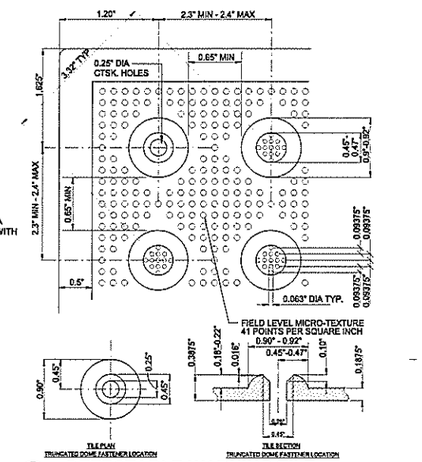


## 2 DETECTABLE WARNING TILE

1-1/2" = 1'-0" REF: CBC 11B-705.1.1 11B-705.1.2 02-102A

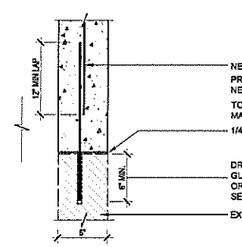


## 19 NEW CURB TO EXISTING CURB

1-1/2" = 1'-0" 02-087-B

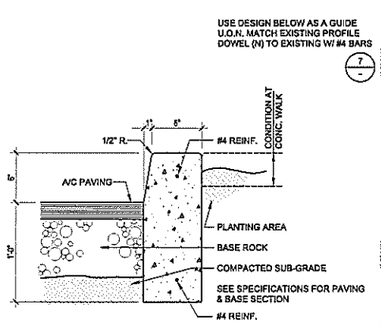


## 15 CONCRETE CURB

1 1/2" = 1'-0" 02-500

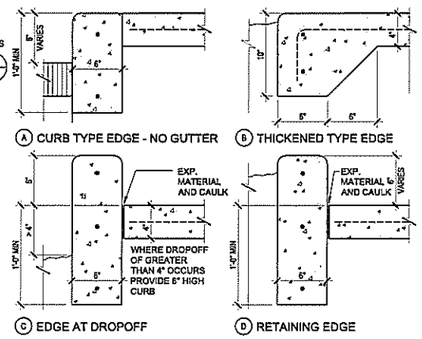


## 11 CONCRETE PAVEMENT EDGE

1-1/2" = 1'-0" SEE PAVING REQUIREMENT NOTES 02-004A

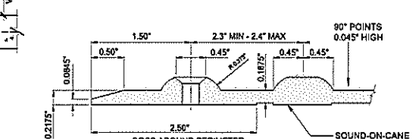


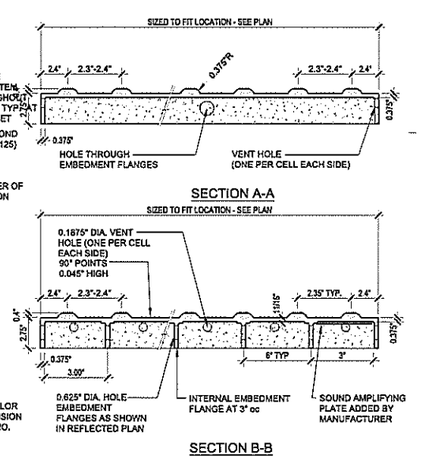


## 4 DETECTABLE WARNING TILE

1-1/2" = 1'-0" 02-102-E

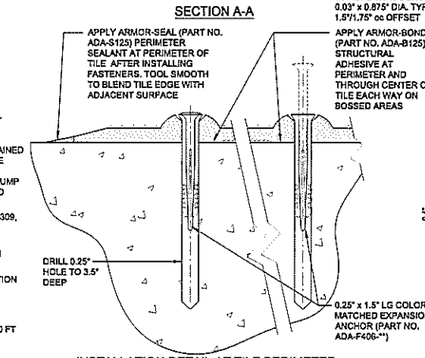


INSTALLATION DETAIL AT TILE PERIMETER

## 8 DETECTABLE WARNING TILE

N.T.S. 02-102-B

| MINIMUM ASPHALT PAVING SECTION REQUIRED | | | | |
|---|---|---|---|---|
| LOCATION: ASPHALT DRIVE & PARKING | AB | (N) AC PVMT | TOTAL | (N) AC PVMT O/ (E) AC PVMT |
| NON-VEHICULAR | 4" | 3" | 7" | 2" |
| STANDARD VEHICULAR | 6" | 3.5" | 11.5" | 2" |
| HEAVY VEHICULAR | 12.5" | 4" | 16.5" | 2" |

| MINIMUM CONCRETE PAVING SECTION REQUIRED | | | |
|---|---|---|---|
| FLAT WORK | CONC. | AB | TOTAL |
| CONCRETE AT WALKS | 4" | 7" | 11.0" |
| CONCRETE AT TRUCK ACCESS | 6" | 7" | 13.0" |
| NOTE: INSTALL #4 REBAR 18" oc THROUGHOUT ALL CONCRETE SURFACES | | | |

NOTES:
1. BASE SHALL BE MIN CLASS II AGGREGATE BASE, 95% RELATIVE COMPACTION OVER COMPACTED SUB BASE (6" MAX LIFT).
2. VERIFY IN FIELD THAT EXISTING SECTIONS MEET MINIMUM REQUIREMENTS AT LOCATIONS BEING MODIFIED.
3. NEW PAVEMENT ADJOINING EXISTING PAVEMENT SHALL CONFORM ALL ALONG AND SHALL BE IN NEAT STRAIGHT LINES.
4. CONTROL JOINTS AND EXPANSION JOINTS SHALL BE AS SHOWN ON THE PLANS ALIGNED, PARALLEL AND PERPENDICULAR WITH CONSISTENT SPACING U.O.N.
5. SEE PAVING REQUIREMENT NOTES ELSEWHERE IN THESE PLANS.
6. MAINTAIN ACCESSIBILITY PER APPLICABLE ADA AND T-24 REGULATIONS FOR ABRUPT CHANGES IN ELEVATION (NOT TO EXCEED 1/4" VERTICAL OR 1/2" VERTICAL IF BEVELED 2h:1v; 4.5% MAX RUNNING SLOPE; 1.5% MAX CROSS SLOPE; 3/8" MAX GAPS.

## 20 FLATWORK SCHEDULE

NO SCALE 02-042

## CONCRETE NOTES

1. SUBGRADE SHALL BE COMPACTED TO 95% RELATIVE COMPACTION.
2. CLASS 2 AGGREGATE BASE SHALL BE COMPACTED TO 95% RELATIVE COMPACTION.
3. CONCRETE SHALL BE CLASS B, CONTAINING NOT LESS THAN 6 SACKS OF CEMENT PER CUBIC YARD, U.O.N. (3000 PSI)
4. FINISHED PAVEMENT GRADE SHALL BE 1/4" ABOVE THE LIP OF THE GUTTER.
5. APPROVED EXPANSION JOINTS, 1/4" WIDE, SHALL BE PROVIDED AT EACH SIDE OF STRUCTURES, AND WHERE SHOWN PER PLAN. (EJ)
6. EXPANSION JOINTS (EJ) SHALL BE PROVIDED MAX 50 FT INTERVALS AND WEAKENED PLANE CONTROL JOINTS (CJ) PROVIDED AT MAX 15 FT INTERVALS. ALIGN SUCH JOINTS WITH ADJACENT SIDEWALK JOINTS OR OTHER PROMINENT FEATURES WHERE OCCURS. REFER TO DESIGN INTENT SHOWN ON PLAN. VERIFY LOCATION WITH ARCHITECT PRIOR TO POUR.

## CONCRETE CURB NOTES

1. PAVING, FLATWORK AND CONCRETE SITEWORK SHALL BE ACCORDING TO RECOMMENDATIONS SET FORTH IN THE 2006 CALIFORNIA DEPARTMENT OF TRANSPORTATION STANDARD SPECIFICATIONS AND DETAILS.
2. SUBGRADE SHALL BE COMPACTED TO 95% RELATIVE COMPACTION.
3. CLASS 2 AGGREGATE BASE SHALL BE COMPACTED TO 95% RELATIVE COMPACTION.
4. CONCRETE SHALL BE CLASS B, CONTAINING NOT LESS THAN 5 SACKS OF CEMENT PER CUBIC YARD, U.O.N.
5. FINISHED PAVEMENT GRADE SHALL BE 1/4" ABOVE THE LIP OF THE GUTTER.
6. APPROVED EXPANSION JOINTS, 1/4" WIDE, SHALL BE PROVIDED AT EACH SIDE OF STRUCTURES, AT ENDS OF CURB RETURNS, AND AT THE TOP OF DRIVEWAY CUTS AND CURB RAMP TAPERS.
7. EXPANSION JOINTS SHALL BE PROVIDED MAX 50 FT INTERVALS AND WEAKENED PLANE CONTROL JOINTS PROVIDED AT MAX 15 FT INTERVALS. ALIGN SUCH JOINTS WITH ADJACENT SIDEWALK JOINTS OR OTHER PROMINENT FEATURES WHERE OCCURS.

## FLATWORK NOTES

1. ALL MATERIALS, EQUIPMENT AND CONSTRUCTION SHALL BE IN ACCORDANCE WITH CALIFORNIA DEPARTMENT OF TRANSPORTATION SPECIFICATIONS FOR CONSTRUCTION.
2. GRANULAR MATERIAL SHALL BE A MINIMUM OF CALTRANS CLASS II COMPACTED TO 95% ASTM 1557 VALUE. COMPACTED GRANULAR MATERIAL SHALL EXTEND HORIZONTALLY FOR MINIMUM DISTANCE OF 6" BEYOND THE EDGES OF NEW CONCRETE.
3. U.O.N. ALL SIDEWALK FLATWORK CONCRETE (PCC) SHALL BE 3000 PSI MINIMUM COMPRESSIVE STRENGTH AT 28 DAYS AND ALL VEHICLE RATED FLATWORK CONCRETE SHALL BE 4000 PSI MINIMUM COMPRESSIVE STRENGTH AT 28 DAYS. PCC WITH AIR ENTRAINED PORTLAND CEMENT WITH A TOTAL AIR CONTENT OF NOT LESS THAN 5% AND NOT MORE THAN 7%. CEMENT CONTENT SHALL BE A MINIMUM OF SIX (6) SACKS PER CUBIC YARD. SLUMP SHALL NOT BE MORE THAN 4" NOR LESS THAN 1-1/2" AS DETERMINED BY THE SLUMP CONE TEST ASTM C-143. ALL FLATWORK SHALL INCLUDE POLYPROPYLENE FIBRILLATED FIBERS WITH A VOLUME OF 1.5 POUNDS PER CUBIC YARD.
4. CONCRETE CURING COMPOUND SHALL BE CLEAR MEMBRANE CONFORMING TO ASTM C-309, TYPE II AND APPLIED AT A RATE OF NOT LESS THAN ONE GALLON PER 200 SQ. FT. OF CONCRETE SURFACE IMMEDIATELY AFTER FINISHING OPERATIONS ARE COMPLETE.
5. ALL DISTURBED LAWN / LANDSCAPED AREAS SHALL BE FINE GRADED AND RAKED TO AN ELEVATION 4" BELOW FINAL GRADE FOR TOPSOIL AND SEED / REPLANTED BY OTHERS.
6. ALL PREPARED GRANULAR FILL / AGGREGATE BASE SHALL MEET STANDARD SPECIFICATION COMPACTION REQUIREMENTS PRIOR TO THE SCHEDULING OF CONCRETE / PAVING MATERIAL DELIVERY.
7. SAWCUTTING REQUIRED FOR REMOVAL SHALL BE INCIDENTAL.
8. EXPANSION JOINTS SHALL BE INSTALLED SUCH THAT NO SINGLE DIMENSION EXCEEDS 40 FT AND ALSO AREA BETWEEN EXPANSION JOINTS NOT TO EXCEED 250 SQ.FT. SEAL ALL EXPANSION JOINTS.
9. SEAL ALL EXPANSION JOINTS. SNAP-CAP EXPANSION JOINT STRIPS CAN BE USED ON ALL EXPANSION JOINTS.
10. SEE SHEET T0.5 FOR ADDITIONAL INFORMATION.


Craig D. Williams
Architecture
Interiors
Planning
Project
Management

295 Neva Street
Sebastopol, CA
95472
(707) 400-8325 (m)
(707) 823-2724 (o)
ArchWiseDesign@Gmail.com



Drawings, specifications and all ideas, designs, and arrangements indicated on these drawings and specifications are and shall remain the property of Craig Williams, architect and are intended to be used in conjunction with this specific project only. No part shall be copied or disclosed to others or anyone to be used in connection with any other work or project other than the specified work for which they were been prepared without the written consent of the architect. There shall be no changes or deviations from these drawings or the accompanying specifications without the written consent of the architect.

THESE DRAWINGS ARE INSTRUMENTS OF SERVICE AND ARE THE SOLE PROPERTY OF CRAIG D. WILLIAMS, ARCHITECT, COPYRIGHT © 2014-2016

Visual artist with these plans and specifications shall constitute conclusive evidence of acceptance of these restrictions.


CRAIG D. WILLIAMS
NOT FOR CONSTRUCTION UNLESS SIGNED BY THE ARCHITECT AND APPROVED BY JURISDICTIONS HAVING AUTHORITY

LICENSED ARCHITECT CRAIG DOUGLAS WILLIAMS No. C026942 REN. 10-31-17 STATE OF CALIFORNIA

12/08/2014

ACCESSIBILITY UPGRADES
IVES POOL AND POOL HOUSE
7400 WILLOW STREET
SEBASTOPOL, CA

PROJECT NUMBER: 082515.00
DATE: 26 JULY, 2016
DRAWN BY: W
CHECKED BY: CW
REVISIONS:

DETAILS

**A3.1**


© THESE DRAWINGS ARE INSTRUMENTS OF SERVICE AND ARE THE SOLE PROPERTY OF CRAIG WILLIAMS ARCHITECT. ANY USE WITHOUT WRITTEN CONSENT IS PROHIBITED.



Aug 23, 2016 - 8:16am cwilliams C:\Documents and Settings\cwilliams\Desktop\CLIENTS\SEBASTOPOL CITY\IVES\CD-A3.1.dwg

# ACCESSIBLE PARKING NOTES

THE STATE OF CALIFORNIA DELEGATES TO THE CITY OF SANTA ROSA, CA THE AUTHORITY TO ENSURE COMPLIANCE WITH TITLE 24, PART 2 OF THE 2013 CALIFORNIA CODE OF REGULATIONS. THESE NOTES INDICATE SPECIFIC AREAS OF TITLE 24, PART 2 WHICH MAY BE APPLICABLE TO THIS PROJECT. THE CONTRACTOR SHALL BE RESPONSIBLE FOR COMPLETING WORK AT THIS FACILITY TO BE IN FULL COMPLIANCE WITH BOTH CALIFORNIA STATE AND FEDERAL REGULATIONS CONTAINED IN THE 2010 AMERICANS WITH DISABILITIES ACT (ADA). WHERE THE ADA REQUIREMENTS EXCEED THOSE CONTAINED IN TITLE 24, PART 2, IT IS THE CONTRACTOR'S RESPONSIBILITY TO ENSURE COMPLIANCE WITH THE ADA, AS THE CITY OF SANTA ROSA IS NOT DELEGATED THE AUTHORITY TO PLAN REVIEW OR INSPECT PROJECTS FOR ADA COMPLIANCE.

THE DESIGN DOCUMENTS SUBMITTED FOR THIS PROJECT SHALL BE REVIEWED FOR COMPLIANCE WITH THE STATE OF CALIFORNIA BUILDING STANDARDS AS MODIFIED AND ADOPTED BY THE CITY OF SANTA ROSA.

1. ACCESSIBLE PARKING GENERAL. ACCESSIBLE CAR AND ACCESSIBLE VAN PARKING SPACES SHALL COMPLY WITH CBC SECTION 11B-502. WHERE PARKING SPACES ARE MARKED WITH LINES, WIDTH MEASUREMENTS OF ACCESSIBLE PARKING SPACES AND ADJOINING ACCESS AISLES SHALL BE MADE FROM THE CENTERLINE OF THE MARKINGS. [CBC 11B-502.1] SEE CBC FIG.11B-502.2, 11B-502.3 AND 11B-502.3.3 ALSO.

   EXCEPTION: WHERE PARKING SPACES OR ACCESS AISLES ARE NOT ADJACENT TO ANOTHER PARKING SPACE OR ACCESS AISLE, MEASUREMENTS SHALL BE PERMITTED TO INCLUDE THE FULL WIDTH OF THE LINE DEFINING THE PARKING SPACE OR ACCESS AISLE. [CBC 11B-502.1]

2. ACCESSIBLE PARKING VEHICLE SPACES. ACCESSIBLE CAR AND ACCESSIBLE VAN PARKING SPACES SHALL BE 216 INCHES (18 FT) LONG MINIMUM. ACCESSIBLE CAR PARKING SPACES SHALL BE 108 INCHES (9 FT) WIDE MINIMUM AND ACCESSIBLE VAN PARKING SPACES SHALL BE 144 INCHES (12 FT) WIDE MINIMUM, SHALL BE MARKED TO DEFINE THE WIDTH, AND SHALL HAVE AN ADJACENT ACCESS AISLE COMPLYING WITH CBC SECTION 11B-502.3. [CBC 11B-502.2]

EXCEPTION: VAN PARKING SPACES SHALL BE PERMITTED TO BE 108 INCHES (9FT) WIDE MINIMUM WHERE THE ACCESS AISLE IS 96 INCHES (8 FT) WIDE MINIMUM. [CBC 11B-502.2]

3. ACCESS AISLE. ACCESS AISLES SERVING PARKING SPACES SHALL COMPLY WITH CBC SECTION 11B-502.3. ACCESS AISLES SHALL ADJOIN AN ACCESSIBLE ROUTE. TWO PARKING SPACES SHALL BE PERMITTED TO SHARE A COMMON ACCESS AISLE. [CBC 11B-502.3] CBC SECTION 11B-302. ACCESS AISLES SHALL BE AT THE SAME LEVEL AS THE PARKING SPACES THEY SERVE. CHANGES IN LEVEL ARE NOT PERMITTED. [CBC 11B-502.4]

4. ACCESS AISLE WIDTH. ACCESS AISLES SERVING CAR AND VAN PARKING SPACES SHALL BE 60 INCHES (5 FT) WIDE MINIMUM. [CBC 11B-502.3.1]

5. ACCESS AISLE LENGTH. ACCESS AISLES SHALL EXTEND THE FULL REQUIRED LENGTH OF THE PARKING SPACES THEY SERVE. [CBC 11B-502.3.2]

6. ACCESS AISLE PAVEMENT MARKINGS. ACCESS AISLES SHALL BE MARKED WITH A BLUE PAINTED BORDERLINE AROUND THEIR PERIMETER. THE AREA WITHIN THE BLUE BORDERLINES SHALL BE MARKED WITH HATCHED LINES A MAXIMUM OF 36 INCHES ON CENTER IN A COLOR CONTRASTING WITH THAT OF THE AISLE SURFACE, PREFERABLY BLUE OR WHITE. THE WORDS "NO PARKING" SHALL BE PAINTED ON THE SURFACE WITHIN EACH ACCESS AISLE IN WHITE LETTERS A MINIMUM OF 12 INCHES IN HEIGHT AND LOCATED TO BE VISIBLE FROM THE ADJACENT VEHICULAR WAY. ACCESS AISLE MARKINGS MAY EXTEND BEYOND THE MINIMUM REQUIRED LENGTH. [CBC 11B-502.3.3]

7. PARKING SPACES AND ACCESS AISLE LOCATION. ACCESS AISLES SHALL NOT OVERLAP THE VEHICULAR WAY. CONTRACTOR TO VERIFY ALL LOCATIONS OF VEHICULAR WAYS PRIOR TO PAINTING OR MODIFYING ANY PAVEMENT MARKINGS OR STRIPES. ACCESS AISLES SHALL BE PERMITTED TO BE PLACED ON EITHER SIDE OF THE PARKING SPACE EXCEPT FOR VAN PARKING SPACES WHICH SHALL HAVE ACCESS AISLES LOCATED ON THE PASSENGER SIDE OF THE PARKING SPACES. [CBC 11B-502.3.4]

8. FLOOR OR GROUND SURFACES OF ACCESSIBLE PARKING SPACES AND ACCESS AISLES. PARKING SPACES AND ACCESS AISLES SERVING THEM SHALL COMPLY WITH CBC SECTION 11B-302. ACCESS AISLES SHALL BE AT THE SAME LEVEL AS THE PARKING SPACES THEY SERVE. CHANGES IN LEVEL ARE NOT PERMITTED. [CBC 11B-502.4]

   EXCEPTION: SLOPES NOT STEEPER THAN 1:48 (2%). [CBC 11B-502.4]

9. VERTICAL CLEARANCE. PARKING SPACES, ACCESS AISLES AND VEHICULAR ROUTES SERVING THEM SHALL PROVIDE A VERTICAL CLEARANCE OF 98 INCHES MINIMUM. [CBC 11B-502.5]

10. ACCESSIBLE PARKING SPACE IDENTIFICATION SIGNS. PARKING SPACE IDENTIFICATION SIGNS SHALL INCLUDE THE INTERNATIONAL SYMBOL OF ACCESSIBILITY COMPLYING WITH CBC SECTION 11B-703.7.2.1. SIGNS IDENTIFYING VAN PARKING SPACES SHALL CONTAIN ADDITIONAL LANGUAGE OR AN ADDITIONAL SIGN WITH THE DESIGNATION "VAN ACCESSIBLE." SIGNS SHALL BE 60 INCHES MINIMUM ABOVE THE FINISH FLOOR OR GROUND SURFACE MEASURED TO THE BOTTOM OF THE SIGN. EXCEPTION: SIGNS LOCATED WITHIN AN ACCESSIBLE ROUTE SHALL BE A MINIMUM OF 80 INCHES ABOVE THE FINISH FLOOR OR GROUND SURFACE MEASURED TO THE BOTTOM OF THE SIGN. [CBC 11B-502.6]

11. SIGN FINISH AND SIZE. PARKING IDENTIFICATION SIGNS SHALL BE REFLECTORIZED WITH A MINIMUM AREA OF 70 SQUARE INCHES. [CBC 11B-502.6.1]

12. MINIMUM FINE SIGN. ADDITIONAL LANGUAGE OR AN ADDITIONAL SIGN BELOW THE INTERNATIONAL SYMBOL OF ACCESSIBILITY SHALL STATE "MINIMUM FINE $250". [CBC 11B-502.6.2]

13. ACCESSIBLE PARKING SIGN LOCATIONS. A PARKING SPACE IDENTIFICATION SIGN SHALL BE VISIBLE FROM EACH PARKING SPACE. SIGNS SHALL BE PERMANENTLY POSTED EITHER IMMEDIATELY ADJACENT TO THE PARKING SPACE OR WITHIN THE PROJECTED PARKING SPACE WIDTH AT THE HEAD END OF THE PARKING SPACE. SIGNS MAY ALSO BE PERMANENTLY POSTED ON A WALL AT THE INTERIOR END OF THE PARKING SPACE. [CBC 11B-502.6.3]

14. ACCESSIBLE PARKING SPACE PAVEMENT MARKINGS. EACH ACCESSIBLE CAR AND VAN SPACE SHALL HAVE SURFACE IDENTIFICATION COMPLYING WITH EITHER 14-A OR 14-B [CBC SECTIONS 11B-502.6.4.1 OR 11B-502.6.4.2]. [CBC 11B-502.6.4]

   14-A. THE ACCESSIBLE PARKING SPACE SHALL BE MARKED WITH AN INTERNATIONAL SYMBOL OF ACCESSIBILITY COMPLYING WITH CBC SECTION 11B-703.7.2.1 IN WHITE ON A BLUE BACKGROUND A MINIMUM 36 INCHES WIDE BY 36 INCHES HIGH. THE CENTERLINE OF THE INTERNATIONAL SYMBOL OF ACCESSIBILITY SHALL BE A MAXIMUM OF 6 INCHES FROM THE CENTERLINE OF THE PARKING SPACE, ITS SIDES PARALLEL TO THE LENGTH OF THE PARKING SPACE AND ITS LOWER CORNER AT, OR LOWER SIDE ALIGNED WITH, THE END OF THE PARKING SPACE LENGTH. [CBC 11B-502.6.4.1]

   14-B. THE ACCESSIBLE PARKING SPACE SHALL BE OUTLINED OR PAINTED BLUE AND SHALL BE MARKED WITH AN INTERNATIONAL SYMBOL OF ACCESSIBILITY COMPLYING WITH CBC SECTION 11B-703.7.2.1 A MINIMUM 36 INCHES WIDE BY 36 INCHES HIGH IN WHITE OR A SUITABLE CONTRASTING COLOR. THE CENTERLINE OF THE INTERNATIONAL SYMBOL OF ACCESSIBILITY SHALL BE A MAXIMUM OF 6 INCHES FROM THE CENTERLINE OF THE PARKING SPACE, ITS SIDES PARALLEL TO THE LENGTH OF THE PARKING SPACE AND ITS LOWER CORNER AT, OR LOWER SIDE ALIGNED WITH, THE END OF THE PARKING SPACE. [CBC 11B-502.6.4.2]

15. RELATIONSHIP OF ACCESSIBLE PARKING SPACES AND ADJACENT ACCESS AISLES TO ACCESSIBLE ROUTES. PARKING SPACES AND ACCESS AISLES SHALL BE DESIGNED SO THAT CARS AND VANS, WHEN PROPERLY PARKED WITHIN THE DESIGNATED ACCESSIBLE PARKING AREA, CANNOT OBSTRUCT THE REQUIRED CLEAR WIDTH OF ADJACENT ACCESSIBLE ROUTES. [CBC 11B-502]

16. ARRANGEMENT. PARKING SPACES AND ACCESS AISLES SHALL BE DESIGNED SO THAT PERSONS USING THEM ARE NOT REQUIRED TO TRAVEL BEHIND PARKING SPACES OTHER THAN TO PASS BEHIND THE PARKING SPACE IN WHICH THEY PARKED. [CBC 11B-502.7.1]

17. WHEEL STOPS. WHERE REQUIRED, AND AS NOTED OR SHOWN TO BE PROVIDED - A CURB OR WHEEL STOP SHALL BE PROVIDED TO PREVENT ENCROACHMENT OF VEHICLES OVER THE REQUIRED CLEAR WIDTH OF ADJACENT ACCESSIBLE ROUTES WHETHER SHOWN ON PLAN OR NOT. IN ADDITION TO WHEELSTOPS REQUIRED BY CODE PROVIDE ALL SUCH ADDITIONAL WHEEL STOPS AS INDICATED OR NOTED ON THESE PLANS. [CBC 11B-502.7.2]

18. TOW-AWAY WARNING SIGNAGE. AN ADDITIONAL SIGN SHALL BE POSTED EITHER: 1) IN A CONSPICUOUS PLACE AT EACH ENTRANCE TO AN OFF-STREET PARKING FACILITY OR 2) IMMEDIATELY ADJACENT TO ON-SITE ACCESSIBLE PARKING AND VISIBLE FROM EACH PARKING SPACE. [CBC 11B-502.8]

   SIZE OF THE ADDITIONAL TOW-AWAY WARNING SIGN: THE ADDITIONAL SIGN SHALL NOT BE LESS THAN 24 INCHES WIDE BY 24 INCHES HIGH. [CBC 11B-502.8.1]

   LETTERING ON THE ADDITIONAL TOW-AWAY WARNING SIGN: THE ADDITIONAL ALUMINUM SIGN WITH BAKED ENAMEL WHITE RETROREFLECTORIZED BACKGROUND SHALL CLEARLY STATE IN BLACK, SAN SERIF, ALL CAPITALIZED LETTERS WITH A MINIMUM HEIGHT OF 1 INCH THE FOLLOWING: "UNAUTHORIZED VEHICLES PARKED IN DESIGNATED ACCESSIBLE SPACES NOT DISPLAYING DISTINGUISHING PLACARDS OR SPECIAL LICENSE PLATES ISSUED FOR PERSONS WITH DISABILITIES WILL BE TOWED AWAY AT THE OWNER'S EXPENSE. TOWED VEHICLES MAY BE RECLAIMED AT: OR BY TELEPHONING (707) 829-4400". BLANK SPACES SHALL BE FILLED IN WITH APPROPRIATE INFORMATION AS NOTED ABOVE AS A PERMANENT PART OF THE SIGN. THE TELEPHONE NUMBER SHALL BE THE LOCAL LAW ENFORCEMENT 24-7 DISPATCH TELEPHONE NUMBER (NOT 911).

Aug 23, 2016 - 10:23am cwilliams C:\Documents and Settings\cwilliams\Desktop\CLIENTS\SEBASTOPOL CITY\IVES\CD-A3.2.DWG

# DETAIL NOTES

1. THE DETECTABLE SURFACE DOMES SHALL BE ORIENTED SUCH THAT THE ROWS ARE PARALLEL WITH THE DIRECTION OF THE RAMP. WHEN MULTIPLE TILES REGARDLESS OF SIZE ARE USED, THEN THE DETECTABLE SURFACE DOMES SHALL BE ALIGNED BETWEEN THE TILES AND THROUGHOUT THE ENTIRE DETECTABLE SURFACE INSTALLATION.
2. PLACE A 1/2" EXPANSION JOINT WHERE WALK SURFACES ABUT THE CURB. THE TYPICAL CURB WIDTH IS SHOWN AS 6 INCHES. WHEN THE CURB IS WIDER THAN 8 INCHES, THE DETECTABLE SURFACE SHALL BE INSTALLED STARTING FROM THE BACK OF CURB REGARDLESS OF DISTANCE FROM THE FACE OF CURB.
3. WET SET DETECTABLE WARNING PANEL (OR TILES) WITH NO LOCK INHIBITOR. SURFACE.
4. WHEN A DETECTABLE SURFACE DOME IS CUT, THE REMAINING DOME SHALL BE BEVELED TO A MAXIMUM SLOPE OF 1V:2H. COLOR MATCH CUT OR GROUND SURFACES WITH COATING IN ACCORDANCE WITH DETECTABLE WARNING MANUFACTURER.
5. DETECTABLE SURFACE CAST IN PLACE TILE IS AVAILABLE FROM: ARMOR TILE TACTILE SYSTEMS (TEL. 800-682-2525), ARMOR CAST, OR APPROVED EQUAL. DETECTABLE SURFACE SHALL HAVE PLASTIC BACK PLATE FOR SOUND ON CANE DIFFERENTIAL. DETECTABLE SURFACE SHALL BE INSTALLED PER MANUFACTURER'S RECOMMENDATIONS. THE COLOR OF THE DETECTABLE SURFACE SHALL CONFORM TO FEDERAL STANDARD 595C TABLE W, COLOR YELLOW CONFORMING TO THE FEDERAL COLOR No. 33538.
6. THE EDGE OF THE DETECTABLE SURFACE SHALL HAVE A BEVELED EDGE SLOPED AT 1V:2H MAXIMUM. WHEN THE DETECTABLE SURFACE EDGE IS CUT AND THE RESULTING EDGE IS NOT FLUSH WITH THE SURFACE OF THE CURB RAMP, THE EDGE SHALL BE BEVELED OR CONFORMED WITH A FILLER AT 1V:2H MAXIMUM SLOPE, IN ACCORDANCE WITH THE DETECTABLE SURFACE MANUFACTURER'S REQUIREMENTS.
7. THE ENTIRE SURFACE OF THE DETECTABLE WARNING SYSTEM SHALL BE OF SLIP RESISTANT COSNSTRUCTION. MANUFACTURED SURFACE CHARACTERISTICS SHALL PROVIDE DURABLE SLIP RESISTANCE OF 0.8 MIN COEFFICIENT OF FRICTION WHEN WET.

# SIGN NOTES

1. ALL SIGNS SHALL BE PER ACCESSIBILITY CODES, 11B-307.3; 11B-216 AND 11B-703; 2013 CBC; AND 216 AND 703 2010 ADAS.
2. PROVIDE SUBMITTAL FOR ALL SIGNS TO BE REVIEWED AND APPROVED BY OWNER AND ARCHITECT IN WRITING PRIOR TO PROCUREMENT
3. ALL GRAPHICS, COPY, FONT, COLOR, CONTRAST, SIZE, CONFIGURATION, AND CALIFORNIA CONTRACTED TYPE II BRAILLE ON ALL SIGNAGE SHALL CONFORM TO THE MOST STRINGENT REQUIREMENTS OF THE AMERICANS WITH DISABILITIES ACT (ADA) ACCESSIBILITY GUIDELINES AND WITH CBC, TITLE 24, C.C.R. FOR NEW BUILDING AND FACILITIES, CURRENT EDITION, U.O.N. (REFER TO MIN. ADA SIGN REQUIREMENT BELOW). SUBMIT SHOP DRAWINGS FOR APPROVAL BY ARCHITECT PRIOR TO FABRICATION.
4. ALL SIGNAGE SHALL BE DONE BY A SINGLE SIGN MANUFACTURER AND REVIEWED BY THE ARCHITECT BEFORE FABRICATION.

# SITE SIGN LEGEND

(#-'X') WHEN A SIGN TYPE IS NOTED THE TYPE WILL BE INDICATED AFTER THE SIGN NUMBER WITH A LETTER (SUCH AS 'X' IN THE EXAMPLE TO THE LEFT) INDICATING THE SIGN TYPE AS NOTED IN THE REFERENCED DETAIL.

(2-B) VAN ACCESSIBLE RESTRICTED PARKING SIGN - SEE DETAILS 4/A3.0 - TYPE 'B' AND 6/A3.0 [CBC 11B-216.5; CBC 11B-502.6] SEE ACCESSIBLE PARKING NOTES SHEET A3.2.

(3-X) DIRECTIONAL SIGN W/ ISA - MOUNT DIRECTLY BELOW SIGN No. 2-B SEE DETAILS 7/A3.0 - TYPE 'D' WITH LEFT AND RIGHT ARROWS [CBC 11B-216.5; CBC 11B-502.6]

# PLAN LEGEND

- LEVEL AREA. 2.0% MAXIMUM SLOPE IN ANY DIRECTION. SURFACE TO DRAIN WATER TOWARDS (E) DRAINAGE WAYS / DRAINAGE STRUCTURES. STANDING WATER NOT ALLOWED. GRIND / OVERLAY SURFACES TO EXTENT NECESSARY TO COMPLY.
- (N) CONCRETE FLATWORK. FOR CONCRETE SUBJECT TO VEHICULAR LOADS SEE DETAIL .
- APPROXIMATE AC GRIND / OVERLAY TO PROVIDE MAX 1:48 SLOPE IN ANY DIRECTION. V.I.F.
- LANDSCAPED AREA
- PAVEMENT MARKING STRIPE - WHITE .
- PAVEMENT MARKING STRIPE - FED BLUE .

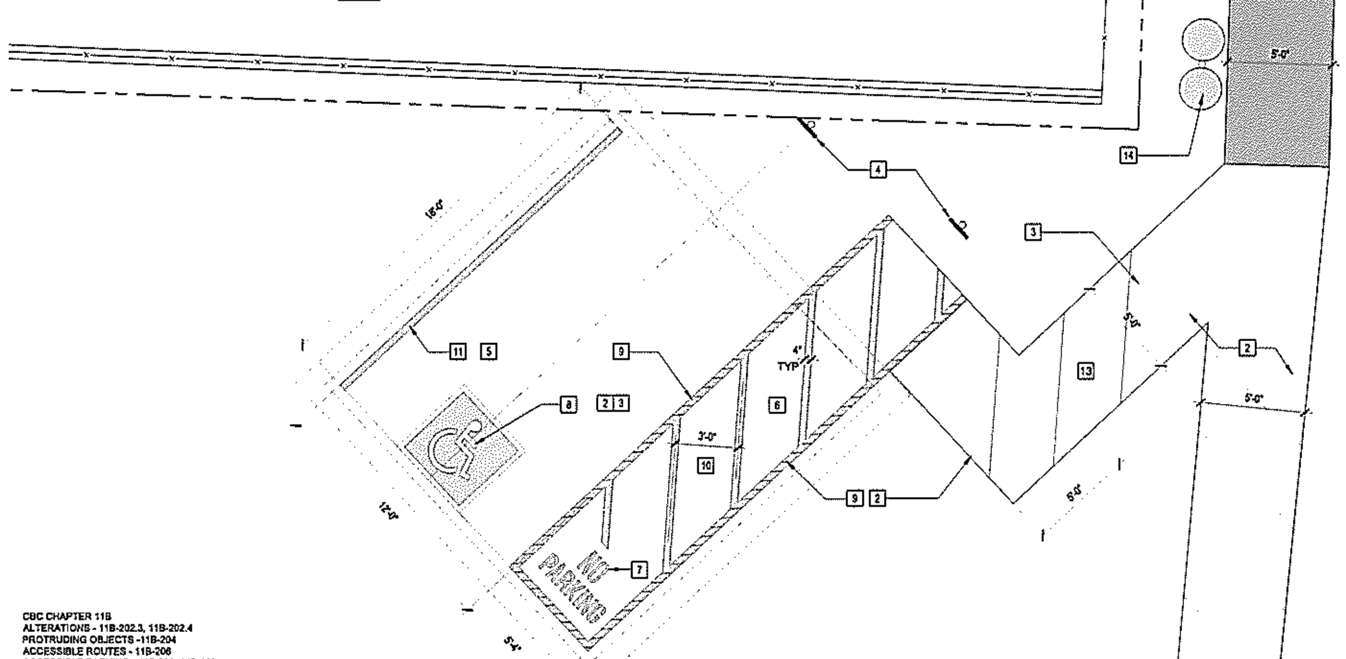


## PLAN LEGEND

- LEVEL AREA. 2.0% MAXIMUM SLOPE IN ANY DIRECTION. SURFACE TO DRAIN WATER TOWARDS (E) DRAINAGE WAYS / DRAINAGE STRUCTURES. STANDING WATER NOT ALLOWED. GRIND / OVERLAY SURFACES TO EXTENT NECESSARY TO COMPLY.

CBC CHAPTER 11B
ALTERATIONS - 11B-202.3, 11B-202.4
PROTRUDING OBJECTS -11B-204
ACCESSIBLE ROUTES - 11B-206
ACCESSIBLE PARKING - 11B-208, 11B-502
GROUND SURFACE - 11B-302
OPENINGS - 11B-302.4
CHANGES IN LEVEL - 11B-303
ACCESSIBLE ROUTES- 11B-402
WALKING SURFACES - 11B-403
DETECTABLE WARNINGS - 11B-405, 11B-705.1.2.2

# CODE REFERENCES

# 1 PARTIAL SITE / ACCESSIBLE PARKING PLAN

1" = 4'-0" SEE DETAIL COMMON NOTES AND DETECTABLE WARNING NOTES THIS SHEET

# SHEET KEY NOTES

1. SAWCUT NEATLY AT EDGES OF AC PAVEMENT TO REMAIN. REMOVE AC PAVEMENT COMPLETE IN AREA INDICATED. WHERE (N) AC FLATWORK IS SHOWN AND INDICATED PREPARE (E) GRAVEL BASE TO RECEIVE (N) WORK PER PLAN. MAKE ALL ADJUSTMENTS AS NECESSARY TO RECEIVE (N) WORK IN ACCORDANCE WITH THESE DESIGN DOCUMENTS AND REFERENCED STANDARDS. EXCAVATE AND RE-GRADE TO A DEPTH READY TO RECEIVE (N) WORK. SEE DETAILS AS APPLY FOR AC PAVING SECTION, TACK COAT EDGES, TAPER SLOPES AS NOTED AND IN COMPLIANCE WITH APPLICABLE STANDARDS. PREP PARKING LOT FOR SLURRY SEAL. VERIFY SCOPE OF AC REPAIRS AND SLURRY SEAL COAT WITH OWNER.
2. PREPARE PARKINGSPACE WITHIN WORK AREA FOR NEW WORK. REMOVE DETERIORATED AC PAVEMENT AT LOCATIONS AND TO THE EXTENT IDENTIFIED BY OWNER. PATCH / OVERLAY AC PAVEMENT. SEE SHEET T04 PAVEMENT NOTES.
3. AC PAVEMENT OVERLAY AT PROPOSED ACCESSIBLE PARKING SPACES AND ACCESSIBLE AISLES. ASPHALT CONCRETE OVERLAY TAPER SHALL OCCUR ENTIRELY OUTSIDE ANY AREA DESIGNATED FOR ACCESSIBLE PARKING AND ACCESS AISLE TAPERS TO CONFORM FLUSH TO (E) AC PAVEMENT TO REMAIN. MAXIMUM SLOPE AT TAPER 8%. MAX DESIGN SLOPE AT PARKING AND ACCESS AISLE 1.5% (MAX PER CODE = 2.083%). SEE DETAIL 3/A1.1. SEE ALSO DETAILS AND PAVEMENT NOTES SHEET A3.1. SEE AC PAVEMENT NOTES SHEET T0.4.
4. NEW SIGN AND SIGN POST PER SITE PLAN AND SIGN LEGEND SHEET A1.0. REMOVE VEGETATION, ORGANIC MATTER AND TOPSOIL, EXCAVATE TO A DEPTH READY TO RECEIVE (N) POST FOOTING. SEE DETAIL 8/A3.0 AS APPLY FOR SIGN FOOTINGS.
5. (N) VAN ACCESSIBLE PARKING STALL. 2% MAXIMUM SLOPE IN ANY DIRECTION. GRIND AND / OR PROVIDE AC OVERLAY TO ACHIEVE COMPLIANT SLOPE CONDITIONS. NO ABRUPT CHANGES IN ELEVATION EXCEEDING 1/4" VERTICAL. ANY CHANGE IN ELEVATION BETWEEN 1/4" AND 1/2" SHALL HAVE THE TOP 1/4" BEVELED NO STEEPER THAN 2h:1v. ABRUPT CHANGES IN LEVEL GREATER THAN 1/2" ARE PERMISSIBLE GRIND SMOOTH AS NECESSARY ANY SUCH EXISTING CONDITIONS. APPLY SLURRY SEAL TO THE FULL AREAS INDICATED FOR (N) DESIGNATED ACCESSIBLE PARKING SPACES AND THEIR ASSOCIATED ACCESS AISLES. PROVIDE NEW STRIPING AND (N) PAVEMENT MARKINGS AS INDICATED. SEE ALSO GENERAL ACCESSIBLE PARKING NOTES SHEET A3.2. AND DETAIL 14/A3.0.
6. (N) ACCESS AISLE. 2% MAXIMUM SLOPE IN ANY DIRECTION. GRIND AND / OR PROVIDE AC OVERLAY TO ACHIEVE COMPLIANT SLOPE CONDITIONS. NO ABRUPT CHANGES IN ELEVATION EXCEEDING 1/4" VERTICAL. ANY CHANGE IN ELEVATION BETWEEN 1/4" AND 1/2" SHALL HAVE THE TOP 1/4" BEVELED NO STEEPER THAN 2h:1v. ABRUPT CHANGES IN LEVEL GREATER THAN 1/2" ARE PERMISSIBLE GRIND SMOOTH AS NECESSARY ANY SUCH EXISTING CONDITIONS. APPLY SLURRY SEAL TO THE FULL AREAS INDICATED FOR (N) DESIGNATED ACCESSIBLE PARKING SPACES AND THEIR ASSOCIATED ACCESS AISLES. PROVIDE NEW STRIPING AND (N) PAVEMENT MARKINGS AS INDICATED. ACCESS AISLE PERIMETER STRIPING 4" WIDE - FEDERAL BLUE / DIAGONAL STRIPES 4" WIDE AT 36" oc - WHITE. SEE ALSO GENERAL ACCESSIBLE PARKING NOTES SHEET A3.2. AND DETAIL 14/A3.0. SEE PAVEMENT MARKING NOTES SHEET T0.6.
7. (N) PAVEMENT MARKING: PREP SURFACES AND PAINT "NO PARKING" 12" HIGH WHITE LETTERS. PAINT WITH PREMIUM QUALITY HEAVY DUTY RATED TRAFFIC PAINT - USE WHITE PAINT APPLIED AT THE MINIMUM RATE OF TWO COATS OF PAINT WITH SUFFICIENT TIME TO ALLOW FULL DRYING / CURING BETWEEN COATS PER MFR. INSTALLATION INSTRUCTIONS. SEE ALSO GENERAL ACCESSIBLE PARKING NOTES SHEET A3.2. AND DETAIL 14/A3.0. SEE PAVEMENT MARKING NOTES SHEET T0.6.
8. (N) PAVEMENT MARKING: PREP SURFACES AND PAINT ISA SYMBOL. PAINT WITH PREMIUM QUALITY HEAVY DUTY RATED TRAFFIC PAINT - USE WHITE AND DARK FEDERAL STANDARD 595, BLUE No. 15180 PAINT APPLIED AT THE MINIMUM RATE OF TWO COATS OF PAINT WITH SUFFICIENT TIME TO ALLOW FULL DRYING / CURING BETWEEN COATS PER MFR. INSTALLATION INSTRUCTIONS. SEE ALSO GENERAL ACCESSIBLE PARKING NOTES SHEET A3.2. AND DETAIL 14/A3.0. SEE PAVEMENT MARKING NOTES SHEET T0.6.
9. (N) PAVEMENT MARKING: PREP SURFACES AND PAINT PERIMETER STRIPES IMMEDIATELY ADJACENT TO DESIGNATED ACCESSIBLE PASSENGER ACCESS AISLE. PAINT WITH PREMIUM QUALITY HEAVY DUTY RATED TRAFFIC PAINT - DARK FEDERAL STANDARD 595, BLUE No. 15180. USE A MINIMUM OF TWO COATS OF PAINT WITH SUFFICIENT TIME TO ALLOW FULL DRYING / CURING BETWEEN COATS PER MFR. INSTALLATION INSTRUCTIONS. SEE ALSO GENERAL ACCESSIBLE PARKING NOTES SHEET A3.2. AND DETAIL 14/A3.0. SEE PAVEMENT MARKING NOTES SHEET T0.6.
10. (N) PAVEMENT MARKING: PREP SURFACES AND PAINT 4 INCH WIDE 45° DIAGONAL STRIPES AT 3 FEET MAXIMUM ON CENTER WITHIN DESIGNATED ACCESSIBLE PASSENGER AISLE. PAINT WITH PREMIUM QUALITY HEAVY DUTY RATED TRAFFIC PAINT - USE WHITE PAINT APPLIED AT THE MINIMUM RATE OF TWO COATS OF PAINT WITH SUFFICIENT TIME TO ALLOW FULL DRYING / CURING BETWEEN COATS PER MFR. INSTALLATION INSTRUCTIONS. SEE ALSO GENERAL ACCESSIBLE PARKING NOTES SHEET A3.2. AND DETAIL 14/A3.0. SEE PAVEMENT MARKING NOTES SHEET T0.6.
11. (N) PAVEMENT MARKING: PREP SURFACES AND PAINT 4 INCH WIDE STRIPES WHERE SHOWN AT DESIGNATED PARKING SPACES. PAINT WITH PREMIUM QUALITY HEAVY DUTY RATED TRAFFIC PAINT - USE WHITE PAINT APPLIED AT THE MINIMUM RATE OF TWO COATS OF PAINT WITH SUFFICIENT TIME TO ALLOW FULL DRYING / CURING BETWEEN COATS PER MFR. INSTALLATION INSTRUCTIONS. SEE ALSO GENERAL ACCESSIBLE PARKING NOTES SHEET A3.2. AND DETAIL 14/A3.0. SEE PAVEMENT MARKING NOTES SHEET T0.6.
12. (N) ACCESSIBLE P.O.T. 4" MIN THK. (2" MIN OVERLAY) AC PAVED WALK , WIDTH AS DETAILED. AT LOCATIONS WHERE (E) WALKS AND DOOR LANDINGS ARE TO BE EXTENDED OR WIDENED CONFORM FLUSH TO (E) WALK SURFACE TO REMAIN. EXTEND AS SHOWN FROM (E) EDGE OF AC PAVED PARKING AREA TO REMAIN TO EDGE OF (E) PAVED WALKS. MAXIMUM ALLOWED RUNNING SLOPE (SLOPE IN DIRECTION OF TRAVEL) IS 5.0% (4.5% MAX TO ALLOW FOR CONSTRUCTION TOLERANCE). USE MINIMUM RUNNING SLOPE PRACTICABLE. MAXIMUM ALLOWED CROSS SLOPE IS 2.0% (CONSTRUCT USING 1.5% MAX TO ALLOW FOR CONSTRUCTION TOLERANCE). WHERE WALK CHANGES DIRECTION AND AT INTERSECTIONS (HATCHED AREAS) SLOPE SHALL BE LIMITED TO 1.5% MAX IN ANY DIRECTION. SLOPE TO DRAIN WATER AWAY FROM WALKS AND TOWARDS NATURAL DRAINAGE / STORMWATER FEATURES. EXTEND PAVEMENT AS NECESSARY (TRANSITIONAL SEGMENTS) WITH MINIMUM WARPING TO CONFORM TO (E) ADJACENT PAVEMENT TO REMAIN. WARPED TRANSITIONAL SEGMENTS SHALL OCCUR OUTIDE OF THE MINIMUM WIDTH REQUIRED FOR ANY WALK. CONFORM ABUTTING EDGES FLUSH TO (E) PAVED SURFACES TO REMAIN WITH A MINIMUM OF WARPING OF PLANE WHILE REMAINING WITHIN MAXIMUM CROSS AND RUNNING SLOPES. AT EXPOSED PAVED SURFACES PROVIDE NEAT AND UNIFORM SLIP AND SKID RESISTANT SURFACE FINISH TREATMENT (0.8 MIN WET COEFF. OF FRICTION). SEE PATH OF TRAVEL NOTES SHEET A1.0. SEE ALSO PATH OF TRAVEL DETAILS AND ACCESSIBILITY NOTES SHEET T0-4. SEE DETAIL 5/A3.1 AND PAVEMENT NOTES SHEET A3.1 ALSO. SEE CONCRETE PAVEMENT SPECIFICATIONS SHEET T0-5.

   NOTE: APPROVAL OF THESE PLANS BY JURISDICTIONAL AJENCY REPRESENTS ACKNOWLEGEMENT BY THE AHJ THAT THE ON-SITE AREAS AT THIS LOCATION REPRESENT CONDITIONS THAT DO NOT EXCEED HAZARDS TO PEDESTRIANS GREATER THAN THE HAZARDS PRESENT AT LOCATIONS WHERE SIDEWALKS IN THE PUBLIC RIGHT-OF-WAY CROSS OR ADJOIN VEHICULAR AREAS. AS SUCH AHJ ACKNOWLEGES THAT VEHICULAR AREAS PRESENT AT THIS SITE ARE NOT HAZARDOUS WITHIN THE MEANING OF THE CALIFORNIA BUILDING CODE SECTION 11B-247.1.2.5.
13. (N) SURFACE APPLIED DETECTABLE WARNINGS. SEE DETECTABLE WARNING NOTES SHEET A3.2, DETAILS 1,2 AN 4 SHEET A3.1 AND DETAIL 3/A3.2.
14. (N) REFUSE AND RECYCLING RECEPTACLE. SEE DETAIL 3/A3.2.

# 1 DETECTABLE WARNING NOTES

CURB RAMPS SHALLCOMPLY WITH CBC 11B-406. DETECTABLE WARNINGS SHALL COMPLY WITH CBC 11-B.247.1.

1. THE DETECTABLE SURFACE DOMES SHALL BE ORIENTED SUCH THAT THE ROWS ARE PARALLEL WITH THE DIRECTION OF THE RAMP. WHEN MULTIPLE TILES REGARDLESS OF SIZE ARE USED, THEN THE DETECTABLE SURFACE DOMES SHALL BE ALIGNED BETWEEN THE TILES AND THROUGHOUT THE ENTIRE DETECTABLE SURFACE INSTALLATION.
2. PLACE A 1/2" EXPANSION JOINT WHERE WALK SURFACES ABUT THE CURB. THE TYPICAL CURB WIDTH IS SHOWN AS 6 INCHES. WHEN THE CURB IS WIDER THAN 8 INCHES, THE DETECTABLE SURFACE SHALL BE INSTALLED STARTING FROM THE BACK OF CURB REGARDLESS OF DISTANCE FROM THE FACE OF CURB.
3. WET SET DETECTABLE WARNING PANEL (OR TILES) WITH NO LOCK INHIBITOR. SURFACE.
4. WHEN A DETECTABLE SURFACE DOME IS CUT, THE REMAINING DOME SHALL BE BEVELED TO A MAXIMUM SLOPE OF 1V:2H. COLOR MATCH CUT OR GROUND SURFACES WITH COATING IN ACCORDANCE WITH DETECTABLE WARNING MANUFACTURER.
5. DETECTABLE SURFACE CAST IN PLACE TILE IS AVAILABLE FROM: ARMOR TILE TACTILE SYSTEMS (TEL. 800-682-2525), ARMOR CAST, OR APPROVED EQUAL. DETECTABLE SURFACE SHALL HAVE PLASTIC BACK PLATE FOR SOUND ON CANE DIFFERENTIAL. DETECTABLE SURFACE SHALL BE INSTALLED PER MANUFACTURER'S RECOMMENDATIONS. THE COLOR OF THE DETECTABLE SURFACE SHALL CONFORM TO FEDERAL STANDARD 595C TABLE W, COLOR YELLOW CONFORMING TO THE FEDERAL COLOR FS No. 33538. CBC 11B-705.1.1.3.1

   DETECTABLE WARNING SURFACES SHALL PROVIDE A 70 PERCENT MINIMUM VISUAL CONTRAST WITH ADJACENT WALKING SURFACES PER CBC 11B-705.1.1.3. CONTRAST IN PERCENT SHALL BE DETERMINED BY:

   CONTRAST PERCENT = [(B1-B2)/B1 x 100 WHERE
   B1 = LIGHT REFLECTANCE VALUE (LRV) OF THE LIGHTER AREA
   B2 = LIGHT REFLECTANCE VALUE (LRV) OF THE DARKER VALUE

   EXCEPTION: WHERE THE DECTABLE WARNING SURFACE DOES NOT PROVIDE A 70 PERCENT MINIMUM CONTRAST WITH ADJACENT WALKING SURFACES, A 1-INCH WIDE MINIMUM VISUALLY CONTRASTING SURFACE SHALL SEPARATE THE DETECTABLE WARNING FROM ADJACENT WALKING SURFACES. THE VISUALLY CONTRASTING SURFACE SHALL CONTRAST WITH BOTH THE DETECTABLE WARNING AND ADJACENT WALKING SURFACES EITHER LIGHT-ON-DARK, OR DARK-ON-LIGHT.
6. THE EDGE OF THE DETECTABLE SURFACE SHALL HAVE A BEVELED EDGE SLOPED AT 1V:2H MAXIMUM. WHEN THE DETECTABLE SURFACE EDGE IS CUT AND THE RESULTING EDGE IS NOT FLUSH WITH THE SURFACE OF THE CURB RAMP, THE EDGE SHALL BE BEVELED OR CONFORMED WITH A FILLER AT 1V:2H MAXIMUM SLOPE, IN ACCORDANCE WITH THE DETECTABLE SURFACE MANUFACTURER'S REQUIREMENTS.
7. DETECTABLE WARNING PRODUCT APPROVAL. ONLY APPROVED DIVISION OF THE STATE ARCHITECT, ACCESS COMPLIANCE (DS/AC) APPROVED DETECTABLE WARNING PRODUCTS AND DIRECTIONAL SURFACES SHALL BE INSTALLED IN ACCORDANCE WITH CBC SECTION 11B-705.
   THE DESIGN INCORPORATING DETECTABLE WARNINGS IN THIS PROJECT IS BASED ON THE ACCEPTANCE OF THIS ALTERNATIVE DESIGN AND INSTALLATION OF DETECTABLE WARNINGS (DW's) AS FULFILLING CBC AND ADA REQUIREMENTS AND TECHNICAL CRITERIA FOR DETECTABLE WARNINGS AND THAT AS DESIGNED THE PROPOSED APPLICATION WILL PROVIDE SUBSTANTIALLY EQUIVALENT OR GREATER ACCESS AND USABILITY AS MODIFIED AND SPECIFICALLY INDICATED HEREIN.
8. THE ENTIRE SURFACE OF THE DETECTABLE WARNING SYSTEM SHALL BE OF SLIP RESISTANT COSNSTRUCTION. MANUFACTURED SURFACE CHARACTERISTICS SHALL PROVIDE DURABLE SLIP RESISTANCE OF 0.8 MIN COEFFICIENT OF FRICTION WHEN WET.
9. DETECTABLE WARNINGS: VITRIFIED POLYMER COMPOSITE (VPC) CAST IN PLACE DETECTABLE/TACTILE WARNING SURFACE TILES SHALL BE AN EPOXY POLYMER COMPOSITION WITH AN ULTRA VIOLET STABILIZED COATING EMPLOYING ALUMINUM OXIDE PARTICLES IN THE TRUNCATED DOMES. THE TILE SHALL INCORPORATE AN IN-LINE PATTERN OF TRUNCATED DOMES MEASURING NOMINAL 0.2" HEIGHT, 0.9" MINIMUM AND 0.92" MAXIMUM BASE DIAMETER, AND 0.45" MINIMUM AND 0.47" MAXIMUM TOP DIAMETER, SPACED CENTER-TO-CENTER 2.3" MINIMUM AND 2.4" MAXIMUM AS MEASURED ON A DIAGONAL AND 1.6" MINIMUM AND 2.4" MAXIMUM AS MEASURED SIDE BY SIDE. BASE-TO-BASE SPACING SHALL BE 0.65" MINIMUM MEASURED BETWEEN THE MOST ADJACENT DOMES ON A SQUARE GRID. FOR WHEELCHAIR AND PEDESTRIAN SAFETY THE FIELD AREA SHALL CONSIST OF A NON-SLIP SURFACE WITH A MINIMUM OF 40 - 90° RAISED POINTS 0.045" HIGH, PER SQUARE INCH; "ARMOR-TILE" AS MANUFACTURED BY ENGINEERED PLASTICS INC., TEL: 800-682-2525, OR APPROVED EQUAL.
10. ALL DETECTABLE WARNING TRUNCATED DOME TILES SHALL BE WET SET TYPE SET IN IN CONCRETE PER MANUFACTURER'S SPECIFICATIONS, U.O.N.
11. TYPE: CAST-IN-PLACE DETECTABLE VITRIFIED POLYMER COMPOSITE MANUFACTURER: ARMOR TILE OR OWNER-APPROVED EQUAL THE TRUNCATED DOMES SHALL BE INSTALLED PER MANUFACTURER'S RECOMMENDATION. THERE SHALL BE NO AIR POCKETS OR VOID SOUNDS WHEN TAPPED LIGHTLY BY A RUBBER MALLET. AIR POCKETS AND POOR INSTALLATION WILL LIKELY RESULT IN THE FAILURE OF THE PANELS.
12. CURB RAMP TOP LANDING: THE TOP LANDING OF THE CURB RAMP (AT SIDEWALK) SHALL BE AT LEAST 4'-0" DEEP MIN. BY 4'-0" WIDE MIN. (OR WIDTH OF LANDING MATCHES WIDTH OF MAIN RAMP BUT SHOULD NOT BE LESS THAN 4'-0"). THE SLOPE AT THE LANDING SHALL BE 1.5% MAX IN ANY DIRECTION OR THE FINISH SLOPE DOES NOT EXCEED THE MAXIMUM ALLOWABLE SLOPE OF 2.0%, NO EXCEPTIONS.
13. CURB RAMP FLARES/SIDE SLOPES - WHERE CURB RAMPS HAVE FLARES ON EITHER OR BOTH SIDES FLARES SHALL HAVE SLOPES AT 10.0% MAXIMUM OR LESS. SLOPE CANNOT EXCEED 10.0% WITH NO EXCEPTIONS. USING A LEVEL, MEASURE THE SLOPE ALONG THE STEEPEST PART OF THE FLARE AND PARALLEL TO THE STREET, VEHICULAR AREA, DRIVE SURFACE OR PARKING AREA.
14. CURB RAMP MAIN RAMP SLOPE: THE MAIN RAMP OF THE CURB RAMP SHALL BE 4'-0" WIDE, MIN. AND SHALL HAVE A SLOPE THAT IS 8.33% MAXIMUM OR LESS. THE SLOPE CANNOT EXCEED 8.33%, WITH NO EXCEPTIONS.
15. CURB RAMP BOTTOM LANDING: THE BOTTOM TRANSITION OF THE MAIN RAMP TO THE GUTTER, DRIVEWAY, PARKING AREA OR STREET SHALL BE FLUSH (NO BEVELED LIP). AT LEAST 2'-0" OF THE BOTTOM LANDING OF THE CURB RAMP (THE LANDING THAT COVERS THE ENTIRE WIDTH OF THE MAIN RAMP) SHALL HAVE A RUNNING SLOPE THAT DOES NOT EXCEED 5.0% AND A CROSS SLOPE THAT DOES NOT EXCEED 2.0%. MILL AWAY ANY BUILT-UP ASPHALT BEFORE RESURFACING TO PROVIDE A SMOOTH TRANSITION BETWEEN THE GUTTER AND THE STREET.
16. CURB RAMP SURFACE FINISH: THE ENTIRE SURFACE OF THE CURB RAMP HAS A MEDIUM TO HEAVY BROOM FINISH.
17. DIMENSIONAL PLACEMENT OF DW'S AT CURB RAMPS: REF CBC 11B-705.1.2.2. DETECTABLE WARNINGS AT CURB RAMPS SHALL EXTEND 36 INCHES IN THE DIRECTION OF TRAVEL. DETECTABLE WARNINGS SHALL EXTEND THE FULL WIDTH OF THE RAMP LESS 2 INCHES MAXIMUM ON EACH SIDE, EXCLUDING ANY FLARED SIDES.

    AT CURB RAMPS WITH FLARES DETECTABLE WARNINGS SHALL BE LOCATED SO THE EDGE NEAREST THE CURB IS 6 INCHES MINIMUM AND 8 INCHES MAXIMUM FROM THE LINE AT THE FACE OF THE CURB MARKING THE TRANSITION BETWEEN THE CURB AND THE GUTTER.

    AT PARALELL CURB RAMPS THE DETECTABLE WARNNGS SHALL BE PLACED ON THE TURNING SPACE AT THE FLUSH TRANSITION BETWEEN THE STREET AND SIDEWALK. DETECTABLE WARNINGS SHALL EXTEND THE FULL WIDTH OF THE TURNING SPACE AT THE FLUSH TRANSITION BETWEEN THE STREET AND SIDEWALK LESS 2 INCHES MAXIMUM ON EACH SIDE, AND SHALL EXTEND A MINIMUM OF 36 INCHES IN DEPTH BACK FROM THE FLUSH TRANSITION BETWEEN THE STREET AND SIDEWALK.
18. LIMIT , STOP LINES AND PAVEMENT MARKINGS: THE LIMIT OR STOP LINE, WHERE PROVIDED, SHALL BE PLACED OR RELOCATED SUCH THAT THE CURB RAMP AND PEDESTRIAN FACILITY SIDE SERVING THE CURB RAMP IS BEYOND THE LIMIT OR STOP LINE. PAVEMENT MARKINGS DESIGNATING AN ADJACENT ACCESSIBLE PATH OF TRAVEL SHALL ADJOIN AND CENTER ON THE RAMP AND EXTEND THE FULL WIDTH OF THE ADJOINING EDGE OF THE RAMP (NOT LESS THAN 4'-0" WIDE).
19. VERIFY ALL SLOPES AND SCREED, PRIOR TO POUR , SUCH AS WITH THE USE A LEVEL WITH A DIGITAL READOUT TO MEASURE SLOPES (FOR EXAMPLE, A "SMART LEVEL").

© THESE DRAWINGS ARE INSTRUMENTS OF SERVICE AND ARE THE SOLE PROPERTY OF CRAIG WILLIAMS ARCHITECT; ANY USE WITHOUT WRITTEN CONSENT IS PROHIBITED.

Craig D. Williams
Architecture
Interiors
Planning
Project
Management

295 Neva Street
Sebastopol, CA
95472

(707) 823-2724
CASpAccess@gmail.com

COPYRIGHT AND CONDITIONAL RIGHT OF USE
Drawings, specifications and all ideas, designs, and arrangements indicated on these drawings and specifications are and shall remain the property of Craig Williams, architect and are intended to be used in connection with this specific project only. No part shall be copied or disclosed to others or otherwise be used in connection with any other work or project other than the specified scope of work for which they have been prepared without the prior written consent of the architect. There shall be no changes or deviations from these drawings or the accompanying specifications without the prior written consent of the Architect - the design professional in responsible charge.

THESE DRAWINGS ARE INSTRUMENTS OF SERVICE THE PROPERTY OF CRAIG D. WILLIAMS, ARCHITECT, COPYRIGHT © 2015-2016

Visual contact with these plans and specifications shall constitute conclusive evidence of acceptance of these restrictions.

CRAIG D. WILLIAMS
LICENSED ARCHITECT CRAIG DOUGLAS WILLIAMS No. C026642 REN. 10-31-17 STATE OF CALIFORNIA
07-26-2016

NOT FOR CONSTRUCTION UNLESS SIGNED BY THE ARCHITECT AND STAMPED APPROVED BY THE AUTHORITY HAVING JURISDICTION

AGENCY APPROVALS

ACCESSIBILITY UPGRADES
IVES POOL
AND POOL HOUSE
7400 WILLOW STREET
SEBASTOPOL, CA

PROJECT NUMBER: 082515.00
DATE: 26 JULY, 2016
DRAWN BY: CW
CHECKED BY: CW
REVISIONS:

DETAILS

A3.2

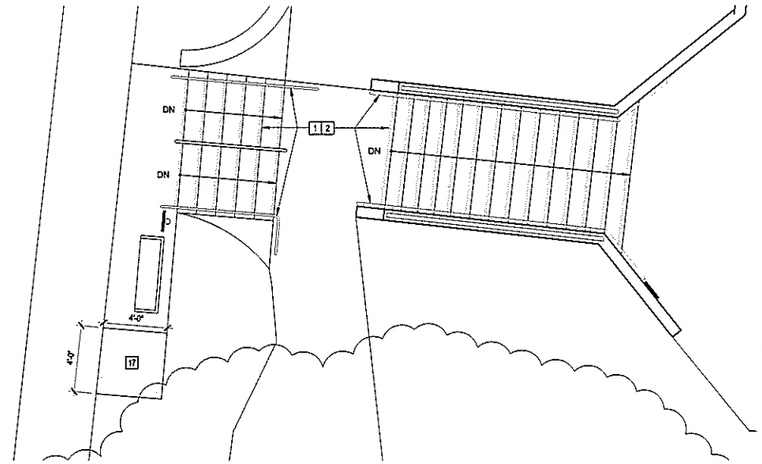


## 1 PARTIAL SITE / BUILDING PLAN

1" = 4'-0"

'A' = 6" MIN AT PAIRS OF DOORS
'B' = 24" MIN AT STRIKE SIDE SINGLE LEAF EXTERIOR DOOR
'C' = 60" MIN CLEAR SPACE
'D' = 5% MAX IF ADJOINING ACCESSIBLE ROUTE, OTHERWISE 10% MAX

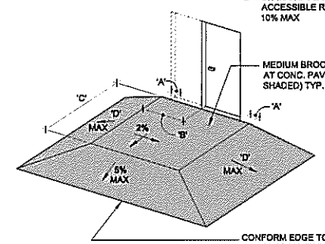


## 4 LANDING AT EXTERIOR DOOR

1/2" = 1'-0"

02-076

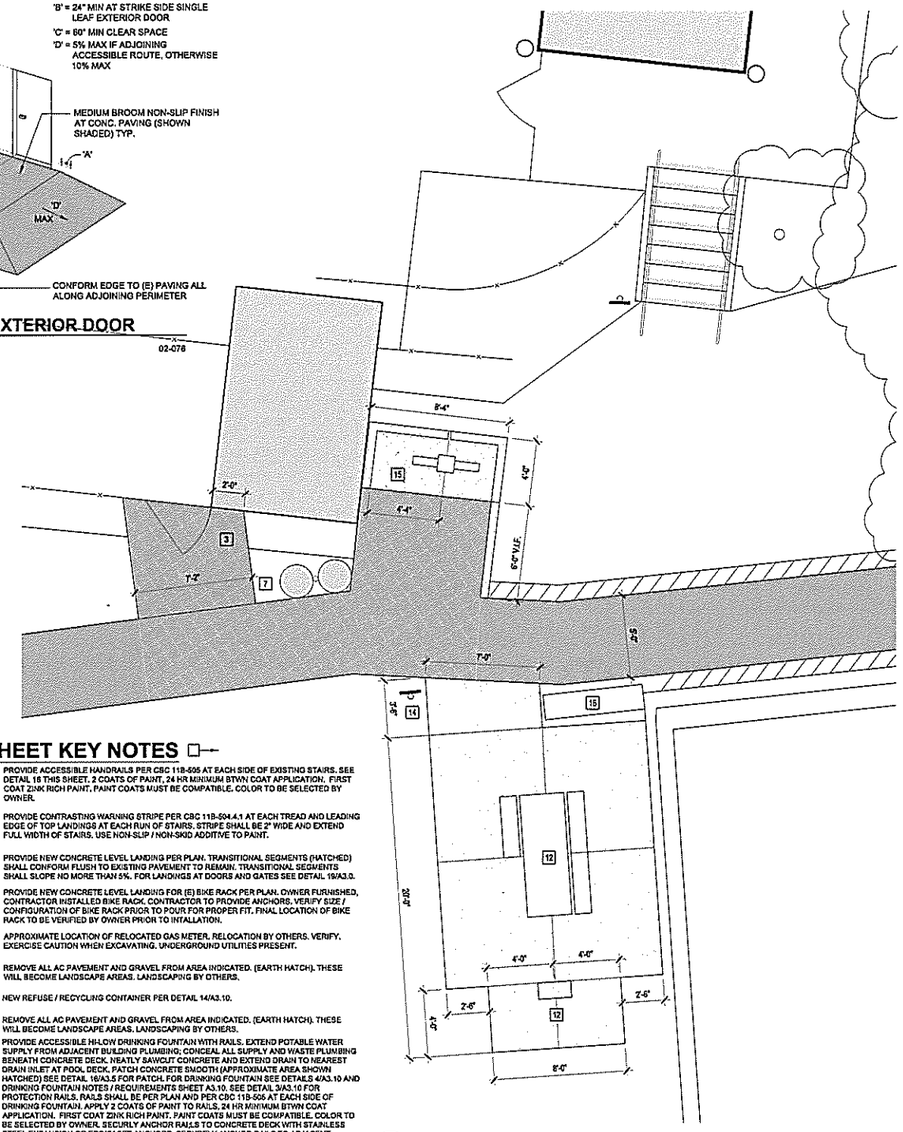


## 3 PARTIAL SITE PLAN

1" = 4'-0"

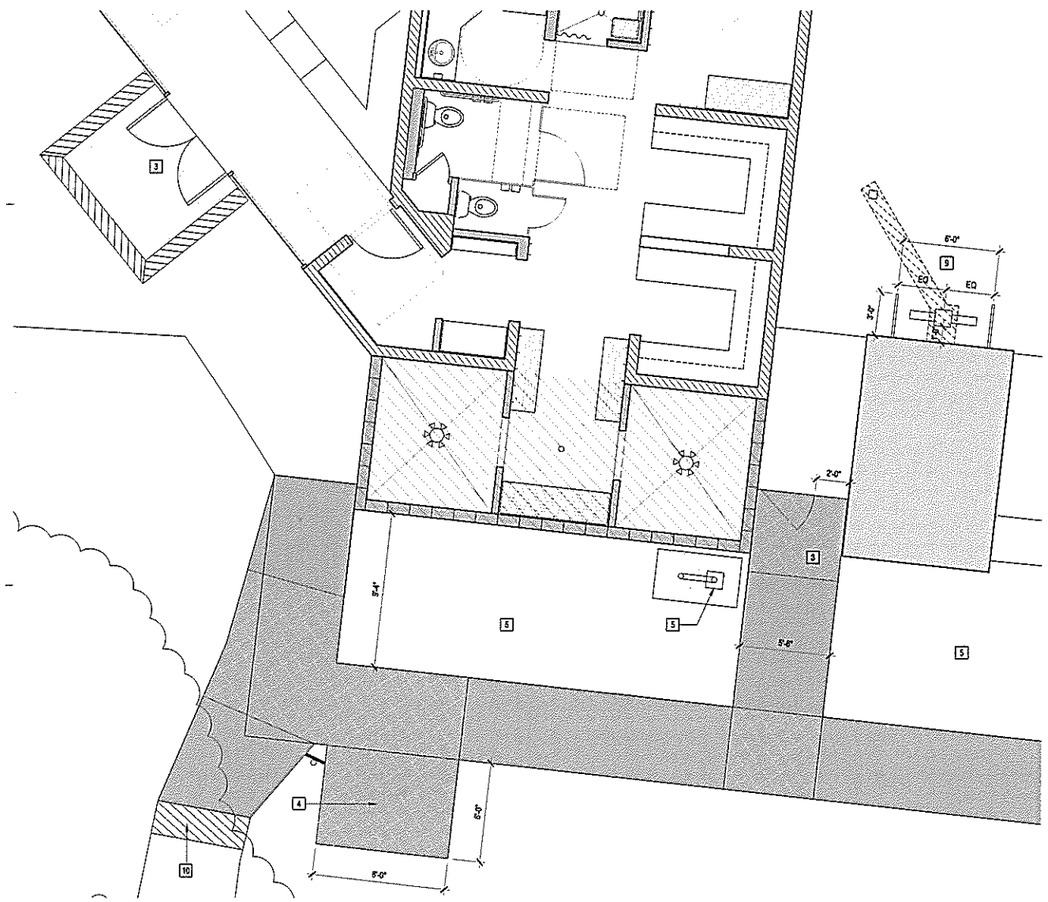


## 2 PARTIAL SITE / BUILDING PLAN

1" = 4'-0"

## SHEET KEY NOTES

1. PROVIDE ACCESSIBLE HANDRAILS PER CBC 11B-505 AT EACH SIDE OF EXISTING STAIRS. SEE DETAIL 18 THIS SHEET. 2 COATS OF PAINT, 24 HR MINIMUM BTWN COAT APPLICATION. FIRST COAT ZINK RICH PAINT. PAINT COATS MUST BE COMPATIBLE. COLOR TO BE SELECTED BY OWNER.
2. PROVIDE CONTRASTING WARNING STRIPE PER CBC 11B-504.4.1 AT EACH TREAD AND LEADING EDGE OF TOP LANDINGS AT EACH RUN OF STAIRS. STRIPE SHALL BE 2" WIDE AND EXTEND FULL WIDTH OF STAIRS. USE NON-SLIP / NON-SKID ADDITIVE TO PAINT.
3. PROVIDE NEW CONCRETE LEVEL LANDING PER PLAN. TRANSITIONAL SEGMENTS (HATCHED) SHALL CONFORM FLUSH TO EXISTING PAVEMENT TO REMAIN. TRANSITIONAL SEGMENTS SHALL SLOPE NO MORE THAN 5%. FOR LANDINGS AT DOORS AND GATES SEE DETAIL 19/A3.0.
4. PROVIDE NEW CONCRETE LEVEL LANDING FOR (E) BIKE RACK PER PLAN. OWNER FURNISHED, CONTRACTOR INSTALLED BIKE RACK. CONTRACTOR TO PROVIDE ANCHORS. VERIFY SIZE / CONFIGURATION OF BIKE RACK PRIOR TO POUR FOR PROPER FIT. FINAL LOCATION OF BIKE RACK TO BE VERIFIED BY OWNER PRIOR TO INTALLATION.
5. APPROXIMATE LOCATION OF RELOCATED GAS METER. RELOCATION BY OTHERS. VERIFY. EXERCISE CAUTION WHEN EXCAVATING. UNDERGROUND UTILITIES PRESENT.
6. REMOVE ALL AC PAVEMENT AND GRAVEL FROM AREA INDICATED. (EARTH HATCH). THESE WILL BECOME LANDSCAPE AREAS. LANDSCAPING BY OTHERS.
7. NEW REFUSE / RECYCLING CONTAINER PER DETAIL 14/A3.10.
8. REMOVE ALL AC PAVEMENT AND GRAVEL FROM AREA INDICATED. (EARTH HATCH). THESE WILL BECOME LANDSCAPE AREAS. LANDSCAPING BY OTHERS.
9. PROVIDE ACCESSIBLE HI-LOW DRINKING FOUNTAIN WITH RAILS. EXTEND POTABLE WATER SUPPLY FROM ADJACENT BUILDING PLUMBING; CONCEAL ALL SUPPLY AND WASTE PLUMBING BENEATH CONCRETE DECK. NEATLY SAWCUT CONCRETE AND EXTEND DRAIN TO NEAREST DRAIN INLET AT POOL DECK. PATCH CONCRETE SMOOTH (APPROXIMATE AREA SHOWN HATCHED) SEE DETAIL 16/A3.5 FOR PATCH. FOR DRINKING FOUNTAIN SEE DETAILS 4/A3.10 AND DRINKING FOUNTAIN NOTES / REQUIREMENTS SHEET A3.10. SEE DETAIL 3/A3.10 FOR PROTECTION RAILS. RAILS SHALL BE PER PLAN AND PER CBC 11B-505 AT EACH SIDE OF DRINKING FOUNTAIN. APPLY 2 COATS OF PAINT TO RAILS. 24 HR MINIMUM BTWN COAT APPLICATION. FIRST COAT ZINK RICH PAINT. PAINT COATS MUST BE COMPATIBLE. COLOR TO BE SELECTED BY OWNER. SECURLY ANCHOR RAILS TO CONCRETE DECK WITH STAINLESS STEEL EXPANSION OR EPOXY SET ANCHORS. SECURELY ANCHOR RAILS TO ADJACENT BUILDING WITH STAINLESS STEEL LAG BOLTS INTO 2x FRAMING. ADD STRL. BACKING / BRACING AS NECESSARY ON INSIDE OF BUILING TO SUPPORT 300 LB LOAD.
10. TRANSITIONAL SEGEMENT OF NEW PAVING WITH MINIMUM WARP TO CONFROM NEW PAVEMENT TO EXITING PAVEMENT. (HATCHED AREA).

### ADD ALTERNATES:

11. PROVIDE (N) ACCESSIBLE PICNIC SITE - CONCRETE PAVEMENT. CONCRETE PER DETAIL 5/A3.1. PROVIDE SCORE LINES AT EQUAL SPACING AS INDICATED. SEE DETAIL 7/A3.10 FOR TABLE ANCHOR.
12. PROVIDE (N) ACCESSIBLE PICNIC TABLE. SEE DETAIL 8/A3.10.
13. PROVIDE (N) ACCESSIBLE PICNIC GRILL. SEE DETAIL 13/A3.10.
14. PROVIDE (N) SIGN INDICATING "ACCESSIBLE PICNIC SITE" WITH ISA. SEE DETAIL 7/A3.0.
15. REMOVE (E) DRINKING FOUNTAIN AND TURN OVER TO CITY. PROVIDE (N) ACCESSIBLE HI-LOW DRINKING FOUNTAIN WITH CONCRETE ALCOVE CONCRETE PER DETAIL 5/A3.1. PROVIDE 6" CONC CURB SURROUND (2) SIDES AS INDICATED PER PLAN . SLOPE CONCRETE TO DRAIN 1.5%. EXTEND POTABLE WATER SUPPLY FROM (E) DRINKING FOUNTAIN PLUMBING; CONCEAL ALL SUPPLY AND WASTE PLUMBING BENEATH (N) CONCRETE PVMT. FOR DRINKING FOUNTAIN SEE DETAILS 4/A3.10 AND DRINKING FOUNTAIN NOTES / REQUIREMENTS SHEET A3.10. CONC. CURBS PER DETAIL 11-C / 11-D / A3.1.
16. PROVIDE (N) ACCESSIBLE BENCH WITH WHEELCHAIR RESTING SPACE. SEE DETAIL 9/A3.10.
17. PROVIDE (N) ACCESSIBLE CONCRETE WHEELCHAIR RESTING SPACE. CONC. PER 5/A3.1.

## PLAN LEGEND

- LEVEL AREA. 2.0% MAXIMUM SLOPE IN ANY DIRECTION. SURFACE TO DRAIN WATER TOWARDS (E) DRAINAGE WAYS / DRAINAGE STRUCTURES. STANDING WATER NOT ALLOWED. GRIND / OVERLAY SURFACES TO EXTENT NECESSARY TO COMPLY.
- (N) CONCRETE FLATWORK. FOR CONCRETE SUBJECT TO VEHICULAR LOADS SEE DETAIL .
- APPROXIMATE AC GRIND / OVERLAY TO PROVIDE MAX 1:48 SLOPE IN ANY DIRECTION. V.I.F.
- LANDSCAPED AREA


Craig D. Williams
Architecture
Interiors
Planning
Project
Management

295 Neva Street
Sebastopol, CA
95472

(707) 823-2724
CASpAccess@gmail.com



COPYRIGHT AND CONDITIONAL RIGHT OF USE

Drawings, specifications and all ideas, designs, and arrangements indicated on these drawings and specifications are and shall remain the property of Craig Williams, architect and are intended to be used in connection with this specific project only. No part shall be copied or disclosed to others or otherwise be used in connection with any other work or project other than the specified scope of work for which they have been prepared without the prior written consent of the architect. There shall be no changes or deviations from these drawings or the accompanying specifications without the prior written consent of the Architect - the design professional in responsible charge.

THESE DRAWINGS ARE INSTRUMENTS OF SERVICE THE PROPERTY OF CRAIG D. WILLIAMS, ARCHITECT, COPYRIGHT © 2015-2018

Visual contact with these plans and specifications shall constitute conclusive evidence of acceptance of these restrictions.


CRAIG D. WILLIAMS

LICENSED ARCHITECT
CRAIG DOUGLAS WILLIAMS
No. C026642
REN. 10-31-17
STATE OF CALIFORNIA

08.21.2018

NOT FOR CONSTRUCTION UNLESS SIGNED BY THE ARCHITECT AND STAMPED APPROVED BY THE AUTHORITY HAVING JURISDICTION

AGENCY APPROVALS

ACCESSIBILITY
UPGRADES
IVES POOL
AND POOL HOUSE
7400 WILLOW STREET
SEBASTOPOL, CA

PROJECT NUMBER:
082515.00
DATE:
21 AUGUST, 2018
DRAWN BY:
CHECKED BY:
CW
REVISIONS:

DETAILS

A3.3


© THESE DRAWINGS ARE INSTRUMENTS OF SERVICE AND ARE THE SOLE PROPERTY OF CRAIG WILLIAMS ARCHITECT. ANY USE WITHOUT WRITTEN CONSENT IS PROHIBITED.



Aug 24, 2018 - 12:31pm cwilliams C:\Documents and Settings\cwilliams\Desktop\CLIENTS\SEBASTOPOL CITY\IVES\CD-A3.3.dwg

## SHEET KEY NOTES

1. PROVIDE ACCESSIBLE HANDRAILS PER CBC 11B-505 AT EACH SIDE OF EXISTING STAIRS. SEE DETAIL 16 THIS SHEET. PROVIDE AND APPLY (2) COATS OF PAINT, 24 HR MINIMUM BTWN COAT APPLICATION. FIRST COAT ZINK RICH PAINT. PAINT CAOTS MUST BE COMPATIBLE, COLOR TO BE SELECTED BY OWNER.

2. PROVIDE CONTRASTING WARNING STRIPE PER CBC 11B-504.4.1 AT EACH TREAD AND LEADING EDGE OF TOP LANDINGS AT EACH RUN OF STAIRS. STRIPE SHALL BE 2" WIDE AND EXTEND FULL WIDTH OF STAIRS. USE NON-SLIP / NON-SKID ADDITIVE TO PAINT.

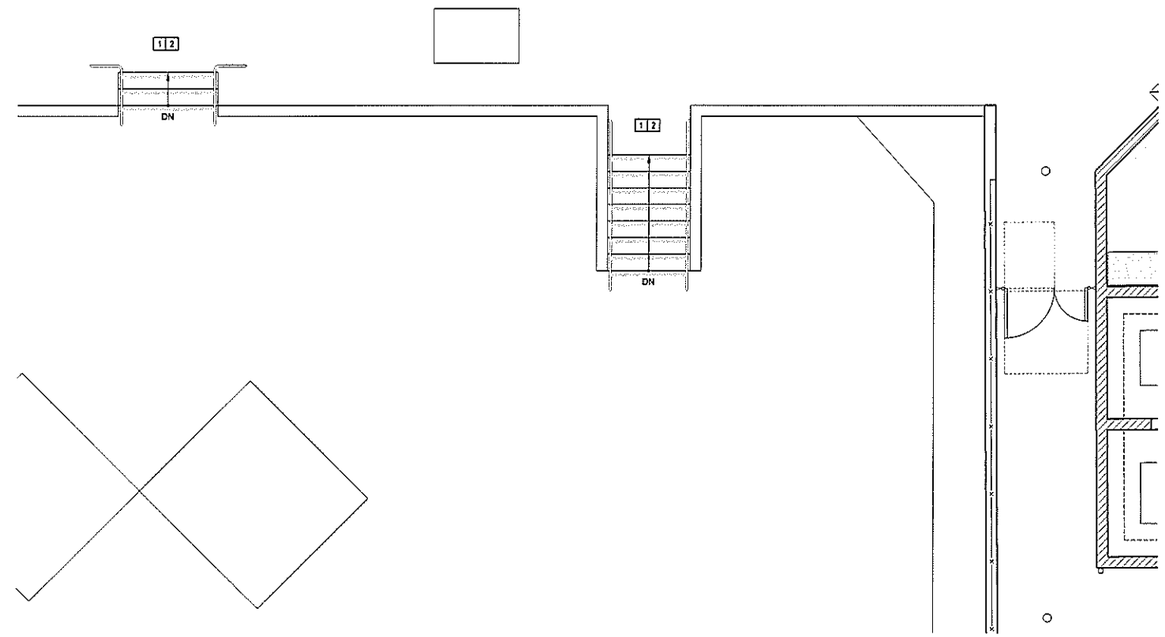


1 PARTIAL SITE / BUILDING PLAN
1" = 4'-0"

## STAIR REQUIREMENTS

**STAIR.** A change in elevation, consisting of one or more risers.

**STAIRWAY.** One or more flights of stairs, either exterior or interior, with the necessary landings and platforms connecting them, to form a continuous and uninterrupted passage from one level to another.

***11B-210 Stairways***

***11B-210.1 General.*** Interior and exterior stairs shall comply with *Section 11B-504*.

***11B-504.4 Tread surface.*** Stair treads shall comply with *Section 11B-302*. Changes in level are not permitted.

**Exception:** Treads shall be permitted to have a slope not steeper than 1:48.

***11B-504.4.1 Contrasting stripe.*** *Interior stairs shall have the upper approach and lower tread marked by a stripe providing clear visual contrast. Exterior stairs shall have the upper approach and all treads marked by a stripe providing clear visual contrast.*

*The stripe shall be a minimum of 2 inches (51 mm) wide to a maximum of 4 inches (102 mm) wide placed parallel to, and not more than 1 inch (25 mm) from, the nose of the step or upper approach. The stripe shall extend the full width of the step or upper approach and shall be of material that is at least as slip resistant as the other treads of the stair. A painted stripe shall be acceptable. Grooves shall not be used to satisfy this requirement.*

***11B-504.6 Handrails.*** Stairs shall have handrails complying with *Section 11B-505*.

***1009.15 Handrails.*** *Stairways shall have handrails on each side and shall comply with Section 1012. Where glass is used to provide the handrail, the handrail shall also comply with Section 2407.*

***11B-505 Handrails***

***11B-505.1 General.*** Handrails provided along walking surfaces complying with *Section 11B-403*, required at ramps complying with *Section 11B-405*, and required at stairs complying with *Section 11B-504* shall comply with *Section 11B-505*.

***11B-505.2 Where required.*** Handrails shall be provided on both sides of stairs and ramps.

***11B-505.3 Continuity.*** Handrails shall be continuous within the full length of each stair flight or ramp run. Inside handrails on switchback or dogleg stairs and ramps shall be continuous between flights or runs.

***11B-505.4 Height.*** Top of gripping surfaces of handrails shall be 34 inches (864 mm) minimum and 38 inches (965 mm) maximum vertically above walking surfaces, stair nosings, and ramp surfaces. Handrails shall be at a consistent height above walking surfaces, stair nosings, and ramp surfaces.

***11B-505.5 Clearance.*** Clearance between handrail gripping surfaces and adjacent surfaces shall be 1½ inches (38 mm) minimum. *Handrails may be located in a recess if the recess is 3 inches (76 mm) maximum deep and 18 inches (457 mm) minimum clear above the top of the handrail.*

***11B-505.6 Gripping surface.*** Handrail gripping surfaces shall be continuous along their length and shall not be obstructed along their tops or sides. The bottoms of handrail gripping surfaces shall not be obstructed for more than 20 percent of their length. Where provided, horizontal projections shall occur 1½ inches (38 mm) minimum below the bottom of the handrail gripping surface.

***11B-505.7 Cross section.*** Handrail gripping surfaces shall have a cross section complying with *Section 11B-505.7.1* or *11B-505.7.2*.

***11B-505.7.1 Circular cross section.*** Handrail gripping surfaces with a circular cross section shall have an outside diameter of 1¼ inches (32 mm) minimum and 2 inches (51 mm) maximum.

***11B-505.8 Surfaces.*** Handrail gripping surfaces and any surfaces adjacent to them shall be free of sharp or abrasive elements and shall have rounded edges.

***11B-505.9 Fittings.*** Handrails shall not rotate within their fittings.

***11B-505.10 Handrail extensions.*** Handrail gripping surfaces shall extend beyond and in the same direction of stair flights and ramp runs in accordance with *Section 11B-505.10*.

**Exceptions:**

3. In alterations, *where the extension of the handrail in the direction of stair flight or ramp run would create a hazard, the extension of the handrail may be turned 90 degrees from the direction of stair flight or ramp run.*

***11B-505.10.2 Top extension at stairs.*** At the top of a stair flight, handrails shall extend horizontally above the landing for 12 inches (305 mm) minimum beginning directly above the first riser nosing. Extensions shall return to a wall, guard, or the landing surface, or shall be continuous to the handrail of an adjacent stair flight.
***11B-505.10.3 Bottom extension at stairs.*** At the bottom of a stair flight, handrails shall extend at the slope of the stair flight for a horizontal distance equal to one tread depth beyond the last riser nosing. *The horizontal extension of a handrail shall be 12 inches (305 mm) long minimum and a height equal to that of the sloping portion of the handrail as measured above the stair nosings.* Extension shall return to a wall, guard, or the landing surface, or shall be continuous to the handrail of an adjacent stair flight.

***STRUCTURAL STRENGTH OF HANDRAILS***

***CBC TABLE 1607.1***
***MINIMUM UNIFORMLY DISTRIBUTED LIVE LOADS, AND***
***MINIMUM CONCENTRATED LIVE LOADS***

***ITEM 5. Handrails, guards and grab bars See Section 1607.8***

***1607.8 Loads on handrails, guards, grab bars, shower seats, dressing room bench seats and vehicle barriers.***

***Handrails, guards, grab bars, accessible seats, accessible benches and vehicle barriers shall be designed and constructed to the structural loading conditions set forth in this section.***

***1607.8.1 Handrails and guards.*** *Handrails and guards shall be designed to resist a linear load of 50 pounds per linear foot (plf) (0.73 kN/m) in accordance with Section 4.5.1 of ASCE 7. Glass handrail assemblies and guards shall also comply with Section 2407.*

***Exceptions:***
*1. For one- and two-family dwellings, only the single concentrated load required by Section 1607.8.1.1 shall be applied.*

**1607.8.1.1 Concentrated load.** Handrails and guards shall also be designed to resist a concentrated load of 200 pounds (0.89 kN) in accordance with Section 4.5.1 of ASCE 7.

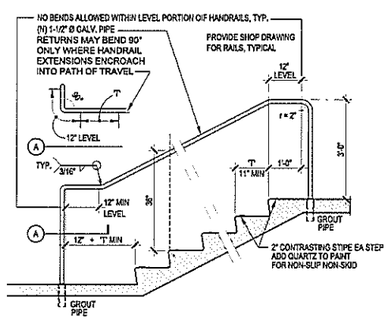


16 STAIR HAND RAIL
1/2" = 1'-0" 05-213-A

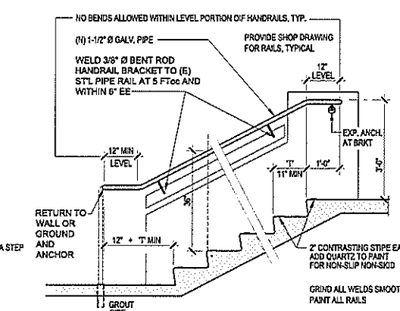


12 STAIR HAND RAIL
1/2" = 1'-0" 05-213-F


Craig D. Williams
Architecture
Interiors
Planning
Project
Management

295 Neva Street
Sebastopol, CA
95472

(707) 823-2724
CASpAccess@gmail.com



COPYRIGHT AND CONDITIONAL RIGHT OF USE
Drawings, specifications and all ideas, designs, and arrangements indicated on these drawings and specifications are and shall remain the property of Craig Williams, architect and are intended to be used in connection with this specific project only. No part shall be copied or disclosed to others or otherwise be used in connection with any other work or project other than the specified scope of work for which they have been prepared without the prior written consent of the architect. There shall be no changes or deviations from these drawings or the accompanying specifications without the prior written consent of the Architect - the design professional in responsible charge.

THESE DRAWINGS ARE INSTRUMENTS OF SERVICE THE PROPERTY OF CRAIG D. WILLIAMS, ARCHITECT, COPYRIGHT © 2015-2018

Visual contact with these plans and specifications shall constitute conclusive evidence of acceptance of these restrictions.


CRAIG D. WILLIAMS

LICENSED ARCHITECT
CRAIG DOUGLAS WILLIAMS
No. C026842
REN. 10-31-17
STATE OF CALIFORNIA

08.30.2016

NOT FOR CONSTRUCTION UNLESS SIGNED BY THE ARCHITECT AND STAMPED APPROVED BY THE AUTHORITY HAVING JURISDICTION

AGENCY APPROVALS

ACCESSIBILITY UPGRADES
IVES POOL
AND POOL HOUSE
7400 WILLOW STREET
SEBASTOPOL, CA

PROJECT NUMBER:
082515.00
DATE:
30 AUGUST, 2016
DRAWN BY:
CHECKED BY:
CW
REVISIONS:

DETAILS

**A3.4**


© THESE DRAWINGS ARE INSTRUMENTS OF SERVICE AND ARE THE SOLE PROPERTY OF CRAIG WILLIAMS ARCHITECT. ANY USE WITHOUT WRITTEN CONSENT IS PROHIBITED.



Aug 31, 2016 - 5:05am cwilliams C:\Documents and Settings\cwilliams\Desktop\CLIENTS\SEBASTOPOL CITY\VES\CD-A3.4.DWG

# ACCESSIBLE TOILET ROOMS

1. GENERAL - WHERE URINALS ARE PROVIDED, AT LEAST ONE SHALL HAVE A CLEAR FLOOR SPACE 30-INCHES X 48-INCHES (762 MM X 1219 MM) IN FRONT OF THE URINAL TO ALLOW A FORWARD APPROACH.
[CBC 11B-213.3.3; 11B-605]

   NOTE: THE REQUIRED CLEAR SPACE IN FRONT OF URINALS MAY EXTEND A MAXIMUM OF 6-INCHES (152 MM) UNDERNEATH THE URINAL IF THE URINAL PROVIDES A MINIMUM OF 9-INCHES (229 MM) OF TOE CLEARANCE FROM THE FLOOR TO THE BOTTOM OF THE URINAL.
[CBC 11B-305.3; 11B-605; 11B-605.3]

2. WHERE URINALS ARE PROVIDED, AT LEAST ONE MUST COMPLY WITH [CBC 11B-213]

3. ACCESSIBLE FIXTURES SINGLE-ACCOMMODATION TOILET FACILITIES SHALL PROVIDE ONE ACCESSIBLE WATER CLOSET AND ONE ACCESSIBLE LAVATORY. ALL FIXTURES SCHEDULED FOR THIS PROJECT ARE TO BE ACCESSIBLE TYPES AND PROVIDED SUCH THAT THEY ARE ACCESSIBLE TO AND USEABLE BY PERSONS WITH

4. TOILET ROOMS FOR EACH GENDER ARE PROVIDED FOR PUBLIC USE AT THIS SITE. EACH SHALL HAVE AT LEAST ONE ACCESSIBLE WATER CLOSET AND ONE ACCESSIBLE LAVATORY. CLEAR FLOOR SPACE AT FIXTURES SHALL BE PROVIDED AND DOORS SHALL NOT SWING INTO THE CLEAR FLOOR SPACE REQUIRED FOR ANY FIXTURE. [CBC 11B-304; 11B-603.2.3; ]

5. NO DOOR MAY SWING INTO THE REQUIRED MANEUVERING SPACE OF A FIXTURE (TOILET, SINK, URINAL, ETC.) UNLESS THE TOILET ROOM IS A SINGLE-ACCOMMODATION ROOM. CLEAR FLOOR SPACE IS SPECIFICALLY ASSOCIATED WITH FIXTURES AND MUST REMAIN UNOBSTRUCTED BY DOORS TO PROVIDE USABILITY. CLEAR FLOOR SPACE IS DIFFERENT FROM MANEUVERING SPACE. MANEUVERING SPACE IS ASSOCIATED WITH ACCESSIBLE ROUTE WIDTH AND TURNING CLEARANCE BOTH OF WHICH MAY OVERLAP.

   [CBC 11B-603.2.3 EXCEPTION 2]

   EXCEPTION: AN IN-SWINGING, SIDE-OPENING DOOR TO AN ACCESSIBLE WATER CLOSET COMPARTMENT SHALL COMPLY WITH CBC FIGURE 11B-1B.

6. ENTRANCE DOOR - PRIVACY LATCH: THE ENTRANCE DOOR TO ALL ACCESSIBLE SINGLE-ACCOMMODATION TOILET ROOMS IN ACCESSIBLE GUEST ROOMS SHALL CONTAIN A LEVER TYPE PRIVACY LATCH. (SEE DOOR HARDWARE REQUIREMENTS). [CBC 11B-404]

7. SUFFICIENT SPACE SHALL BE PROVIDED FOR A WHEELCHAIR MEASURING 30-INCHES WIDE x 48-INCHES (762 MM x 1219 MM) LONG TO ENTER THE ROOM AND PERMIT THE DOOR TO CLOSE, EXCEPT AT DOORS (MINIMUM 32-INCHES (813MM)), THE MINIMUM CLEAR WIDTH OF THE ACCESSIBLE ROUTE(S) SHALL BE 36-INCHES (915 MM). [CBC 11B-304.2; CBC 11B-304.3; CBC 11B-305; CBC 11B-403.5.1; CBC 11B-802]

8. IF AND WHERE THE ACCESSIBLE ROUTE MAKES A 180-DEGREE TURN AROUND AN OBSTRUCTION THAT IS LESS THAN 48-INCHES (1219 MM) WIDE, THE CLEAR WIDTH SHALL BE 42-INCHES (1067 MM) MINIMUM APPROACHING THE TURN, 48-INCHES (1219 MM) MINIMUM AT THE TURN AND 42-INCHES (1067 MM) MINIMUM LEAVING THE TURN [CBC 11B-403.5.1; CBC 11B-403.5.2] SEE DETAIL 5/A3.10.

9. EXCEPT FOR SINGLE OCCUPANCY TOILET AND BATHING ROOMS [SEE CBC 11B-603.2.3 EXCEPTION 2] DOORS MAY SWING INTO THE TURNING SPACE BUT ONLY UP 12-INCHES (305 MM) MAXIMUM. DOORS MAY NOT SWING INTO REQUIRED FIXTURE CLEARANCE SPACES MEASURING 30-INCHES x 48-INCHES (762 MM x 1219 MM) MINIMUM. FIXTURE WHEELCHAIR CLEARANCE SPACE MUST BE AVAILABLE IN THE ROOM AND MUST BE LOCATED BEYOND THE ARC OF THE DOOR SWING. THIS ENSURES BOTH SUFFICIENT SPACE BEYOND THE DOOR SO IT CAN CLOSE AND OPEN WITHOUT THE DOOR HITTING A WHEELCHAIR OR OCCUPANT. [CBC 11B-404 AND 11B-603]

10. NO DOOR MAY ENCROACH MORE THAN 12-INCHES (305 MM) INTO THE REQUIRED CLEAR SPACE. [CBC 11B-603.2.3]

11. TURNING SPACE: TURNING SPACE CAN BE PROVIDED AS A 60-INCHES (1524 MM) MINIMUM DIAMETER CIRCLE [CBC11B-304.3.1] OR 'T-SHAPED SPACE [CBC 11B–304.3.2] SEE DETAIL 12/A3.8.

12. FIXTURES WITH KNEE AND TOE CLEARANCE [CBC 11B-306] CAN OVERLAP TURNING SPACE. SUCH OVERLAP SHOULD BE MINIMIZED IF NOT WHOLLY AVOIDED. IN THE CASE OF T-SHAPED SPACE, FIXTURE OVERLAP CAN ONLY OCCUR ON ONE SEGMENT OF THE "T" SINCE THE OTHER SEGMENTS MUST ACCOMMODATE APPROACH AND BACK-UP MANEUVERING.[CBC11B-305.4; CBC11B-305.5.5; CBC11B-305.6; CBC11B-305.7]

13. WATER CLOSETS: THE CENTERLINE OF THE WATER CLOSET SHALL BE LOCATED AT 17-18 INCHES DISTANCE FROM THE SIDE-WALL OR PARTITION.
[CBC 11B-604.2]
SEE DETAILS 11/A3.7 AND 20/A3.9.

14. WATER CLOSET CONTROLS SHALL BE LOCATED ON THE WIDE SIDE OF THE COMPARTMENT, SHALL BE OPERABLE WITH ONE HAND AND SHALL NOT REQUIRE TIGHT GRASPING, PINCHING OR TWISTING OF THE WRIST NOR ANY EFFORT THAT EXCEEDS 5 LBS. [CBC 11B-604]

15. WHERE THE WATER CLOSET IS NOT ADJACENT TO ANOTHER FIXTURE, A MINIMUM 60 INCH-WIDE CLEAR FLOOR SPACE SHALL BE PROVIDED FROM THE OPPOSITE-SIDE WALL OR PARTITION TO THE SIDE OF THE WATER CLOSET, AND THE CLEAR SPACE SHALL EXTEND FROM THE REAR WALL TO 56 INCHES MINIMUM IN FRONT OF THE WATER CLOSET.
[CBC 11B-604.3.1; CBC 11B-604.3.2]

16. THE TOP OF THE TOILET SEAT SHALL BE 17-INCHES (432 MM) TO 19-INCHES (483 MM) FROM FLOOR SURFACE MEASURED TO THE TOP OF A MAXIMUM 2-INCHES (51 MM) HIGH TOILET SEAT. [CBC 11B-604.4]
SEE DETAIL 11/A3.7.
NOTE: AUTOMATIC "SPRING TO LIFTED POSITION" SEATS ARE NOT ALLOWED.

17. FLUSH VALVE: FLUSH VALVE CONTROLS MUST BE MOUNTED NO MORE THAN 44-INCHES (1118 MM) ABOVE THE FLOOR ON THE WIDE SIDE OF THE TOILET SO THAT THEY ARE WITHIN REACH FROM THE AVAILABLE CLEAR FLOOR SPACE. THIS SPACE CAN BE LOCATED ON EITHER SIDE OF THE TOILET DEPENDING ON THE TOILET COMPARTMENT CONFIGURATION. THE FLUSH VALVE SHALL BE LOCATED ON THE WIDE SIDE OF THE TOILET AREA. [CBC 11B-309; CBC11B-604.6] INTERPRETATION: PUSH BUTTON FLUSH CONTROLS, SOMETIMES LOCATED IN THE CENTER OF THE TOP OF A TANK TYPE TOILET MAY COMPLY - VERIFY WITH LOCAL BUILDING AUTHORITY, ARCHITECT AND OWNER.

18. MAXIMUM FORCE REQUIRED TO OPERATE THE FLUSH VALVE SHALL BE 5 LB. [CBC 11B-309]

19. WALLS WITHIN COMPARTMENT SHALL BE SMOOTH, HARD AND NON-ABSORBENT TO 48-INCHES (1219 MM) IN HEIGHT ABOVE THE FLOOR AND SHALL NOT BE ADVERSELY AFFECTED BY MOISTURE. USE WATER RESISTANT GYPSUM BOARD IN TOILET / BATHROOMS (EXCEPT AT TILE FINISHED WALLS SURROUNDS AT TUBS AND SHOWERS - USE FIBER REINFORCED CEMENTITIOUS WATER RESISTANT TILE BACKER BOARD OVER WATER PROOF SHEET MEMBRANE). USE MILDEW RESISTANT PRIMERS AND PAINTS. PAINT SHALL BE SEMI-GLOSS OR GLOSS ACRYLIC SCRUB RESISTANT PAINT. COLOR AS SELECTED BY OWNER. PROVIDE AN APPROVED 5-INCH WALL BASE WITH BOTTOM SEALED WITH CONTINUOUS BEAD OF FLEXIBLE SILICONE TYPE CAULKING (SIKAFLEX OR OWNER APPROVED EQUIVALENT). FLAME SPREAD AND SMOKE DEVELOPMENT OF ALL FINISHES SHALL COMPLY WITH [CBC 801.2; CBC 803.1]

20. TOILET ROOM FINISHED FLOOR SURFACES SHALL BE SMOOTH, SLIP-RESISTANT (COEFFICIENT OF FRICTION 0.8 MINIMUM - OSHA STANDARD 29 CFR 1910 SUBPART D, APPENDIX A ), SHALL BE HARD AND NON-ABSORBENT AND SHALL EITHER EXTEND IN A COVED CONDITION UPWARD A MINIMUM OF 5-INCHES ONTO WALLS (PORTLAND CEMENT, CONCRETE, CERAMIC TILE, SHEET MATERIAL) OR BY WAY OF A CONTINUOUS SEALED TOP SET WALL BASE. ALL MATERIALS SHALL BE APPROVED BY OWNER AND LOCAL JURISDICTION).

21. FLOORS WITHIN TOILET ROOMS SHALL BE LEVEL (2.0% MAXIMUM SLOPE IN ANY DIRECTION). FLOOR GRATES OR DRAINS LOCATED WITHIN TOILET ROOMS SHALL HAVE DRAIN OPENINGS NO LARGER THAN 1/4-INCH (6 MM). [CBC 11B-304.2]

22. GRAB BARS WITHIN THE ACCESSIBLE TOILET COMPARTMENTS SHALL BE PROVIDED ON THE SIDE WALL CLOSEST TO THE WATER CLOSET AND ON THE REAR WALL. [CBC 11B-604.5; CBC 11B-604.8.1.5]

   GRAB BARS SHALL BE SECURELY ATTACHED AND SHALL BE MOUNTED HORIZONTALLY AT 33-INCHES MINIMUM AND 36-INCHES MAXIMUM TO THE TOP OF THE BAR ABOVE AND PARALLEL TO FLOOR. [CBC 11B-609.4]
SEE DETAIL 11/A3.7.

   GRAB BARS SHALL BE MOUNTED SUCH THAT THERE IS 1-1/2 INCH ABSOLUTE CLEARANCE BETWEEN THE GRAB BAR AND WALL AND 1-1/2 INCH CLEARANCE MINIMUM BETWEEN ANY PROJECTING OBJECT BELOW OR AT THE ENDS OF THE BAR. NO PROJECTING OBJECTS MAY BE MOUNTED WITHIN 12 INCHES ABOVE THE BAR. [CBC 11B-609.3]

   GRAB BARS SHALL NOT OBSTRUCT THE REQUIRED CLEAR FLOOR AREA [CBC 11B-609.7]

23. <u>SIDE GRAB BARS:</u> THE SIDE GRAB BAR SHALL BE A MINIMUM OF 42-INCHES (1067 MM) IN LENGTH. (48-INCHES SIDE GRAB BAR RECOMMENDED TO ACHIEVE COMPLIANCE AND PROVIDE FLEXIBILITY IN MOUNTING LOCATION AND ACCOUNT FOR CONSTRUCTION TOLERANCES). [CBC 11B-604.5; CBC 11B-609].

   THE SIDE GRAB BAR SHALL BEGIN A MAXIMUM OF 12-INCHES (305 MM) FROM THE REAR WALL. THE FRONT END OF THE SIDE GRAB BAR SHALL BE POSITIONED A MINIMUM OF 24-INCHES (610 MM) IN FRONT OF THE WATER CLOSET. THE FRONT END OF THE SIDE GRAB BAR SHALL BE LOCATED A MINIMUM OF 54-INCHES (1372 MM) FROM THE REAR WALL. [CBC 11B-604.5.1].

24. <u>REAR GRAB BARS:</u> REAR GRAB BAR SHALL BE A MINIMUM 36-INCHES (915 MM) LONG. THE REAR GRAB BAR SHALL EXTEND FROM THE CENTERLINE OF THE WATER CLOSET 12-INCHES (305 MM) MINIMUM ON ONE SIDE AND 24-INCHES (610 MM) MINIMUM ON THE OTHER SIDE. [CBC 11B-604.5.2]

25. THE DIAMETER OR WIDTH OF THE GRIPPING SURFACES OF THE GRAB BAR(S) SHALL BE 1-1/4-INCHES TO 1-1/2-INCHES OR THE SHAPE PROVIDES AN EQUIVALENT GRIPPING SURFACE. [CBC 11B-609.2]

26. THE CLEARANCE BETWEEN THE GRAB BAR(S) AND WALL SHALL BE 1-1/2-INCHES (38 MM). [CBC 11B-609.3] SEE DETAIL 11/A3.7.

27. MINIMUM STRUCTURAL STRENGTH OF GRAB BAR(S) SHALL BE INSTALLED TO SUPPORT A 250 LB. POINT LOAD. U.O.N. PROVIDE 2x MIN SOLID FRAMING BACKING WITH A34 OR A35 FRAMING CLIPS E.E. AND #10 ST.STL. SCREW ANCHORS EMBEDED 1-1/2 INCHES MINIMUM INTO FRAMING [CBC11B-609.8]

28. THE GRAB BAR(S) AND ANY WALL OR OTHER SURFACE ADJACENT TO THE BAR SHALL BE FREE OF ANY SHARP OR ABRASIVE ELEMENTS. [CBC 11B-609.5]

29. ANY EDGES ON THE GRAB BAR(S) SHALL HAVE A MINIMUM RADIUS OF 1/8 INCH. , GRAB BARS SHALL NOT ROTATE WITHIN THEIR FITTINGS. [CBC11B-609.6]

30. THE TOILET PAPER DISPENSER SHALL BE LOCATED ON THE SIDE WALL AND A MINIMUM OF 1-1/2 INCHES BELOW THE GRAB BAR. THE TOILET PAPER DISPENSER SHALL BE LOCATED SUCH THAT THE CENTERLINE OF THE DISPENSER IS BETWEEN 7" AND 9" IN FRONT OF THE TOILET. THE TOILET PAPER DISPENSER SHALL BE MOUNTED AT A MINIMUM HEIGHT OF 19-INCHES (483 MM) FROM THE FLOOR TO THE CENTERLINE OF THE DISPENSER. DISPENSERS SHALL NOT BE LOCATED CLOSER TO 1-1/2 INCHES BELOW THE PARALLEL GRAB BAR OR WITH LOWEST PART OF DISPENSER WITHIN 12-INCHES (483 MM) ABOVE GRAB BAR (UNLESS FULLY RECESSED). [CBC11B-604.7; CBC 11B 604.9.6; CBC 11B-609.3] SEE DETAIL 11/A3.7.

31. THE TOILET PAPER DISPENSERS SHALL ALLOW FOR CONTINUOUS PAPER FLOW AND SHALL NOT CONTROL DELIVERY. [CBC11B-604.7]

32. SANITARY SEAT COVER DISPENSERS SHALL BE LOCATED ON THE SIDE WALL AND A MINIMUM OF 1-1/2 INCHES BELOW THE GRAB BAR. THE DISPENSER SHALL BE LOCATED WITHIN A REACH RANGE AND IN FRONT OF THE TOILET. THE DISPENSER SHALL BE MOUNTED AT A MINIMUM HEIGHT OF 19-INCHES (483 MM) FROM THE FLOOR TO THE LOWEST DISPENSING POINT AND 40 INCHES MAXIMUM TO THE HIGHEST DISPENSING POINT. DISPENSERS SHALL NOT BE LOCATED CLOSER TO 1-1/2 INCHES BELOW THE PARALLEL GRAB BAR OR WITH LOWEST PART OF DISPENSER WITHIN 12-INCHES (483 MM) ABOVE GRAB BAR (UNLESS FULLY RECESSED). [CBC11B-603.5; CBC 11B-609.3] SEE DETAIL 11/A3.7.0

33. COAT HOOKS, SHELVES: AT LEAST ONE COAT HOOKS SAHALL BE LOCATED WITHIN ONE OF THE REACH RANGES SPECIFIED IN CBC 11B-308 WITH A CLEAR FLOOR AREA PER CBC 11B-305 MEASURING 30 INCHES x 48 INCHES MINIMUM. AT LEAST ONE SHELF (AND NO LESS THAN 50% MIN EFFECTIVE SHELF AREA) SHALL BE LOCATED 40 INCHES MINIMUM AND 48 INCHES MAXIMUM ABOVE THE FINISHED FLOOR. [CBC 11B-603.4; CBC 11B-604.8.3]

**LAVATORIES & MIRRORS:**

1. LAVATORIES AND MIRRORS SHALL BE ACCESSIBLE.
[CBC 11B-213.2.1; CBC 11B-213.3.5; CBC 11B-306; CBC 11B-603.3; CBC 11B-606]

   MOUNT LAVATORY WITH 34-INCHES (864 MM) MAXIMUM HEIGHT OF RIM OR COUNTER ABOVE FLOOR SURFACE. [CBC 11B-306.3.1]

2. REQUIRED CLEAR SPACE SHALL ADJOIN OR OVERLAP AN ACCESSIBLE ROUTE AND SHALL HAVE KNEE AND TOE CLEARANCE PER CBC 11B-306 UNDERNEATH THE LAVATORY. [CBC 11B-306.3.3 EXCEPTION 1]

3. THE ACCESSIBLE LAVATORY SHALL HAVE A MINIMUM OF 27 INCHES INCHES HIGH, A.F.F. AT A DEPTH OF 8 INCHES MINIMUM INCREASING TO 29 INCHES INCHES MINIMUM A.F.F. AT THE LEADING EDGE OF THE FIXTURE OR COUNTER AT VANITY [CBC 11B-306.3.3, EXCEPTION 1]

   THE MINIMUM REQUIRED DEPTH FOR TOE CLEARANCE SHALL EXTEND 19 INCHES UNDER SINKS OR VANITY COUNTERS. [CBC 11B-306.2.3]

4. HEIGHT OF LAVATORIES AND MIRRORS HEIGHT AND CLEARANCES

   LAVATORIES: THE MAXIMUM HEIGHT OF LAVATORIES SHALL BE 34-INCHES (864 MM) MEASURED TO THE RIM OR COUNTER SURFACE (WHICHEVER IS HIGHER). [CBC 11B-606.3]

   MIRRORS: THE BOTTOM EDGE OF THE EFFECTIVE REFLECTING SURFACE OF MIRRORS LOCATED ABOVE LAVATORIES MUST BE 40-INCHES (1016 MM) MAXIMUM OR 35-INCHES (889 MM) MAXIMUM IF NOT LOCATED ABOVE LAVATORIES.

5. A MINIMUM 30-INCHES X 48-INCHES (762 MM X 1219 MM) CLEAR SPACE SHALL BE PROVIDED IN FRONT OF LAVATORY THAT ALLOWS FORWARD APPROACH. [CBC 11B-305; CBC 11B-605.3]

7. CLEARANCE TO SIDE WALL OR PARTITION: LAVATORIES ADJACENT TO A SIDEWALL OR PARTITION SHALL HAVE A MINIMUM 18-INCHES (457 MM) DISTANCE TO THE CENTERLINE OF THE FIXTURE. [CBC 11B-606.6]

8. CLEARANCE: PROVIDE KNEE AND TOE CLEARANCE. [CBC 11B-606.7]

9. WATER SUPPLY AND DRAIN PIPES UNDER LAVATORIES AND SINKS SHALL BE INSULATED OR OTJHERWISE CONFIGURED TO PROTECT AGAINST CONTACT. [CBC 11B-606.5]

<u>HAZARDS:</u>

1. SCALD PROTECTION: DRAIN AND HOT WATER PIPING, INSTANTANEOUS WATER HEATERS, VALVES OR ANY SURFACE WHICH CONVEYS OR CONTROLS HOT WATER SHALL BE INSULATED OR CONFIGURED TO PREVENT CONTACT.

2. SHARP OBJECTS: THERE SHALL BE NO SHARP OR ABRASIVE ELEMENTS UNDER LAVATORY OR VANATU COUNTERS.

<u>FAUCET CONTROLS:</u>

1. FAUCETS SHALL BE LEVER TYPE; PUSH TYPE OR ELECTRONICALLY CONTROLLED MECHANISMS (PREFERABLE). [CBC 11B-309; CBC 11B-606.4]
NOTE: SELF-CLOSING VALVES MUST MAINTAIN A MINIMUM OF 10 SECONDS OPEN FLOW.

2. FAUCET CONTROLS AND OPERATING MECHANISMS SHALL BE OPERABLE WITH ONE HAND AND SHALL NOT REQUIRE TIGHT GRASPING, PINCHING OR TWISTING OF THE WRIST. [CBC 11B-309]

3. MAXIMUM FORCE REQUIRED TO ACTIVATE CONTROLS SHALL BE 5 LBS. [CBC 11B-309]

<u>TOILET ROOM ACCESSORIES DISPENSERS, RECEPTACLES AND OTHER ELEMENTS</u>
[CBC 11B-309; CBC 11B-603.5]

1. ACCESS TO DISPENSERS, RECEPTACLES, COAT HOOKS, SHELVES, AND OTHER PROVIDED ELEMENTS INCLUDES: CLEAR WHEELCHAIR SPACE FOR EITHER A FORWARD OR SIDE APPROACH LOCATION WITHIN ACCESSIBLE REACH RANGES OF 15-INCHES (381 MM) TO 48-INCHES (1219 MM) (THE MAXIMUM WILL BE LESS WHERE REACHES ARE OBSTRUCTED) [CBC 11B-305, CBC 11B-308]

2. OPERATING FORCES NO MORE THAN 5 POUNDS ONE-HAND OPERATION WITHOUT TIGHT GRASPING, PINCHING, OR TWISTING OF THE WRIST A MINIMUM 30-INCH X 48-INCH CLEAR FLOOR OR GROUND SPACE IS PROVIDED TO ALLOW FORWARD OR PARALLEL APPROACH TO ACCESSORIES. [CBC 11B-309]

3. ONE FULL UNOBSTRUCTED SIDE OF THE CLEAR FLOOR OR GROUND SPACE SHALL ADJOIN OR OVERLAP AN ACCESSIBLE ROUTE OR SHALL ADJOIN ANOTHER WHEELCHAIR CLEAR FLOOR SPACE. [CBC 11B-305]

4. MIRROR(S) LOCATED ABOVE ACCESSIBLE LAVATORIES OR COUNTERTOPS SHALL BE INSTALLED WITH THE BOTTOM EDGE OF THE EFFECTIVE REFLECTIVE SURFACE 40-INCHES MAXIMUM ABOVE THE FINISH FLOOR OR GROUND. [CBC 11B-213.3.5; CBC 11B-603.3; CBC 11B-603.6] WHEN MIRRORS ARE PROVIDED AT LOCATIONS OTHER THAN ABOVE LAVATORIES OR COUNTERTOPS, AT LEAST ONE SHALL BE INSTALLED WITH THE BOTTOM EDGE OF THE REFLECTIVE SURFACE 35-INCHES MAXIMUM ABOVE THE FINISH FLOOR OR GROUND. [CBC 11B-222.3]

COMMON ISSUES RESULTING IN NON-COMPLIANCE IS WHERE THE MIRROR HAS BEEN INSTALLED BASED ON A MEASUREMENT TO THE BOTTOM OF THE FRAME. ANOTHER COMMON PROBLEM IS WHERE THE MEASUREMENT MIGHT BE TAKEN FROM THE BOTTOM OF THE GLASS, HOWEVER, THE MIRROR HAS A BEVELED EDGE AND THE REFLECTING PART AT THE BEVEL DOES NOT SERVE IN THE MANNER INTENDED BY A MIRROR. THE MEASUREMENT MUST TAKE INTO ACCOUNT BEVELS OR OTHER CONDITIONS THAT MIGHT NOT MAKE THE SURFACE REFLECTIVE IN A FUNCTIONAL MANNER. ROUND, OVAL AND IRREGULARLY SHAPED MIRRORS MUST PROVIDE A REASONABLE (WIDTH AND HEIGHT) TO PERFORM AS A REFLECTING SURFACE THAT A REASONABLE PERSON WOULD NOT CONCLUDE THAT THERE HAS BEEN DISCRIMINATION. AN ADDITIONAL SINGLE FULL-LENGTH MIRROR IS RECOMMENDED IN EACH WASHROOM BECAUSE IT IS UNIVERSALLY USABLE..

5. THE LOWEST OPERABLE PARTS (INCLUDING COIN SLOTS, CONTROL AND OPERATION PARTS, DISPENSING POINTS, ETC.) OF ALL FIXTURES OR ACCESSORIES SHALL BE LOCATED A MAXIMUM OF 40 INCHES ABOVE THE FINISHED FLOOR (I.E., SOAP DISPENSERS, TOWELS, TOILET SEAT COVERS, AUTO-DRYERS, SANITARY NAPKINS, DISPENSERS, WASTE RECEPTACLES, ETC.). [CBC 11B-606.5]

6. THE CONTROLS AND OPERATING MECHANISMS SHALL BE OPERABLE WITH ONE HAND AND SHALL NOT REQUIRE TIGHT GRASPING, PINCHING, OR TWISTING OF THE WRIST. [CBC 11B-309]

7. THE FORCE REQUIRED TO ACTIVATE CONTROLS SHALL BE 5 IBS. MAXIMUM. [CBC 11B-309]

8. THE HIGHEST OPERABLE, FUNCTIONAL OR SERVICEABLE PART OF COAT HOOKS, SHELVING, ETC. SHALL BE LOCATED WITHIN APPROPRIATE REACH RANGES. [CBC 11B-308; CBC 11B-603.4]

9. **TOILET TISSUE DISPENSERS:** TOILET PAPER DISPENSERS FOR UNIVERSAL ACCESS ROLL DISPENSERS WITHOUT CONTROLLED DELIVERY ARE PREFERRED. FOLDED-TISSUE DISPENSERS ARE NOT RECOMMENDED BECAUSE THEY REQUIRE A FINGER PINCHING ACTION. STANDARD TOILET TISSUE ROLLS SHOULD BE MOUNTED WITH THEIR CENTERLINE BETWEEN 7"-9" FROM THE RIM OF THE TOILET. WHERE MULTIPLER TOILET ROLLS ARE PROVIDED ALL DISPENSING POINTS SHALL BE LOCATED WITHIN THIS RANGE. RECOMMENDED TO USE OVER-UNDER TYPE DISPENSER.

   LOCATE DISPENSERS WITH THEIR HORIZONTAL CENTERLINE AT LEAST 19-INCHES (483 MM) ABOVE THE FINISH FLOOR AND WITH THE TOP OF THE DISPENSER / ROLL NO HIGHER THAN 1-1/2-INCHES (38 MM) BELOW THE GRAB BAR.

10. SANITARY NAPKIN / TAMPON DISPENSERS- BUTTONS AND KNOBS SHALL BE OPERABLE WITH ONE HAND AND WITHOUT TIGHT GRASPING, PINCHING, OR TWISTING OF THE WRIST. OPERATION OF PULL OR PUSH KNOBS OR LEVERS SHOULD NOT REQUIRE MORE THAN 5 POUNDS OF FORCE TO OPERATE. THE MAXIMUM HEIGHT OF THE TOP OR UPPERMOST OPERABLE COMPONENT (COIN SLOT, LEVER, KNOB, ETC.) AND DISPENSING LOCATION SHALL BE 40 INCHES OR LESS; THE LOWEST POINT 15-INCHES (381 MM) ABOVE THE FINISHED FLOOR. NOTE ALSO THAT THE FURTHEST PROTRUDING COMPONENT SHALL PROJECT NO MORE THAN 4-INCHES (102 MM) FROM THE FACE OF THE WALL. FLUSH RECESSED OR SEMI-RECESSED UNITS RECOMMENDED.

11. SOAP DISPENSERS PUSH BUTTONS AND PISTONS SHOULD BE OPERABLE WITH ONE HAND AND WITHOUT TIGHT GRASPING, PINCHING, OR TWISTING OF THE WRIST. ACTIVATION OF SOAP VALVES SHOULD NOT REQUIRE MORE THAN 5 POUNDS OF FORCE. IF WALL-MOUNTED UNITS ARE PLACED OVER LAVATORIES OR COUNTERTOPS, THEN THEIR PUSH BUTTONS SHOULD BE LOCATED NO HIGHER THAN 40-INCHES ABOVE THE FINISH FLOOR. NOTE ALSO THAT THE FURTHEST PROTRUDING COMPONENT SHALL PROJECT NO MORE THAN 4-INCHES (102 MM) FROM THE FACE OF THE WALL. FLUSH RECESSED OR SEMI-RECESSED UNITS RECOMMENDED.

12. **PAPER TOWEL DISPENSERS:** ACCESS TO PAPER TOWELS (CONTROLS AND DISPENSING LOCATIONS) SHALL BE LOCATED ENTIRELY BETWEEN 15-INCHES (381 MM) MINIMUM TO 40-INCHES MAXIMUM ABOVE THE FINISH FLOOR TO ALLOW FORWARD AND SIDE REACH BY PEOPLE IN WHEELCHAIRS. PAPER TOWEL DISPENSING CONTROLS SHOULD NOT REQUIRE PINCHING OR TWISTING OF THE WRIST NOR MORE THAN 5 POUNDS OF FORCE TO OPERATE. NOTE ALSO THAT THE FURTHEST PROTRUDING COMPONENT SHALL PROJECT NO MORE THAN 4-INCHES (102 MM) FROM THE FACE OF THE WALL. FLUSH RECESSED OR SEMI-RECESSED UNITS RECOMMENDED.

13. **WASTE RECEPTACLES:** ACCESS TO RECEPTACLE OPENINGS SHOULD BE PROVIDED AT BETWEEN 15-INCHES (381 MM) TO BOTTOM OF OPENING AND 40-INCHES TO TOP OF OPENING AS MEASURED ABOVE THE FINISH FLOOR TO ALLOW FORWARD AND SIDE REACH BY PEOPLE IN WHEELCHAIRS. HINGED PANELS COVERING WASTE RECEPTACLE OPENINGS SHALL NOT REQUIRE MORE THAN 5 POUNDS OF FORCE TO OPEN. IT IS RECOMMENDED THAT WASTE RECEPTACLE UNITS NOT PROJECT MORE THAN 4-INCHES (102 MM) FROM THE WALL SO AS NOT TO BE A HAZARD TO BLIND PEOPLE OR INTERFERE WITH REQUIRED ACCESS AISLES, FIXTURE CLEARANCES AND THE 60-INCHES (1524 MM) MINIMUM DIAMETER TURNING SPACES FOR WHEELCHAIRS. OFTEN PAPER TOWEL DISPENSERS AND WASTE RECEPTACLES CAN BE INSTALLED AS A COMBINATION UNIT. FLUSH RECESSED OR SEMI-RECESSED UNITS RECOMMENDED.

14. A CLEAR FLOOR AREA MEASURING 30 INCHES x 48 INCHES ADJOINING OR OVERLAPPING AN ACCESSIBLE PATH OF TRAVEL SHALL BE PROVIDED WHERE ACCESSORIES ARE PROVIDED.

15. **COMBINATION PAPER TOWEL/WASTE UNITS:** ACCESS TO PAPER TOWELS AND THEIR DISPENSING CONTROLS SHALL BE BETWEEN 15-INCHES (381 MM) AND 40-INCHES ABOVE THE FINISH FLOOR TO ALLOW FORWARD AND SIDE REACH BY PEOPLE IN WHEELCHAIRS. HINGED PANELS COVERING WASTE RECEPTACLE OPENINGS SHOULD NOT REQUIRE MORE THAN 5 POUNDS OF FORCE TO OPEN AND ALSO LOCATED BETWEEN 15-INCHES (381 MM) AND 40-INCHES ABOVE THE FINISH FLOOR. IT IS RECOMMENDED THAT COMBINATION UNITS NOT PROJECT MORE THAN 4-INCHES (102 MM) FROM THE WALL SO AS NOT TO BE A HAZARD TO BLIND PEOPLE OR INTERFERE WITH REQUIRED ACCESS AISLES AND THE 60-INCH MINIMUM DIAMETER TURNING SPACES FOR WHEELCHAIRS. OFTEN PAPER TOWEL DISPENSERS AND WASTE RECEPTACLES CAN BE INSTALLED AS A COMBINATION UNIT. FLUSH RECESSED OR SEMI-RECESSED UNITS RECOMMENDED.

16. **HAND DRYERS:** HAND DRYERS WHEN USED IN LIEU OF PAPER TOWEL DISPENSERS AND WASTE RECEPTACLES CAN SAVE COST OVER TIME AND OFTEN PAY FOR THEMSELVES WITHIN 4 YEARS (SAVINGS IN COSTS TO PURCHASE AND MAINTAIN PAPER TOWELS AND WASTE RECEPTACLES). HOWEVER, THESE ARE NOT RECOMMENDED IN HIGH VANDALISM OR ABUSIVE ENVIRONMENTS. IF HAND DRYERS ARE PROVIDED THEY SHALL BE MOUNTED SUCH THAT THE HIGHEST PART OF THE ACTIVATION BUTTON IS NO MORE THAN 40-INCHES ABOVE THE FINISHED FLOOR AND IS OPERABLE WITH ONE HAND AND NOT REQUIRING MORE THAN 5 POUNDS OF FORCE. NO PART OF A UNIT MAY PROTRUDE MORE THAN 4-INCHES (102 MM) FROM THE FACE OF THE WALL. IT IS HELPFUL IF SUCH UNITS ARE OF A CONTRASTING COLOR FROM SURROUNDING MATERIAL SO PERSONS WITH LIMITED VISION CAN SEE THEM WELL AND BLIND PEOPLE CAN FEEL THEM EASILY. OTHERWISE, PROVIDE AUTOMATIC DRYERS WITH NO-TOUCH OPERATION. WHEN A SINGLE DRYER IS INSTALLED IN A WASHROOM, IT IS RECOMMENDED THAT THE START BUTTON BE LOCATED 38-INCHES TO 40-INCHES ABOVE THE FINISHED FLOOR, WITH AT LEAST: 30-INCHES x 48-INCHES (762 MM x 1219 MM) OF CLEAR FLOOR SPACE CENTERED IN FRONT OF THE UNIT TO ALLOW BOTH LEFT-HANDED AND RIGHT-HANDED WHEELCHAIR APPROACHES.

   WHEN TWO OR MORE DRYERS ARE INSTALLED, MOUNT AT LEAST ONE DRYER SO ITS START BUTTON IS LOCATED ENTIRELY WITHIN 38-INCHES TO 40-INCHES ABOVE THE FINISH FLOOR.

17. **COAT HOOKS:** IF COAT HOOKS ARE PROVIDED WITHIN THE TOILET ROOM OR AN ACCESSIBLE TOILET COMPARTMENT, AT LEAST ONE COAT HOOK SHALL BE PROVIDED WHERE NO PART OF THE COAT HOOK IS HIGHER THAN 47" A.F.F.

18. **SHELVES:** IF A UTILITY OR CONVENIENCE SHELF IS PROVIDED WITHIN THE TOILET ROOM OR AN ACCESSIBLE TOILET COMPARTMENT, AT LEAST ONE SUCH SHELF SHALL BE PROVIDED AT NO LESS THAN 40" AND NO HIGHER THAN 48" A.F.F.

19. BABY CHANGING STATION: IF A BABY CHANGING STATION IS PROVIDED WITHIN THE TOILET ROOM OR AN ACCESSIBLE TOILET COMPARTMENT, AT LEAST ONE SUCH UNIT SHALL BE PROVIDED SUCH THAT THE HIGHEST OPERABLE COMPONENT OR HANDLE IS NO HIGHER THAN 48" A.F.F., THE WORK SURFACE IS NO HIGHER THAN 34" A.F.F. AND THAT KNEE CLEARANCE OF 27" MINIMUM IS PROVIDED AND EXTENDS A MINIMUM OF 19" UNDER THE UNIT.

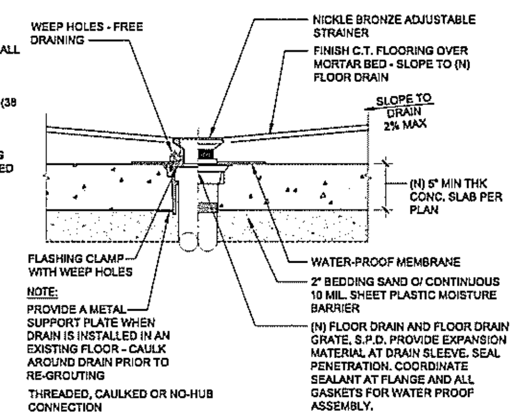


11 FLOOR DRAIN AT CONC. FLOOR
3" = 1'-0" 03-006-A

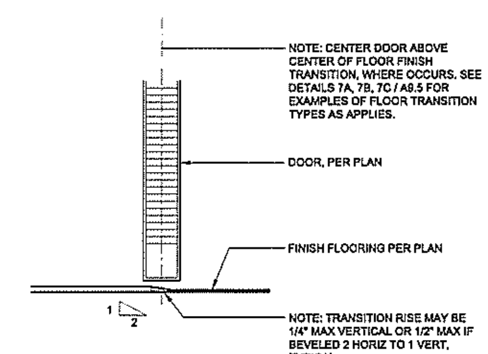


7 GENERAL CONDITIONS FOR FLOORING TRANSITIONS
3" = 1'-0" 09-149

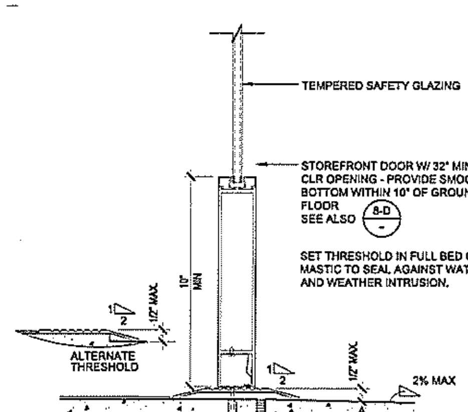


20 EXTERIOR THRESHOLD
3" = 1'-0" 08-040

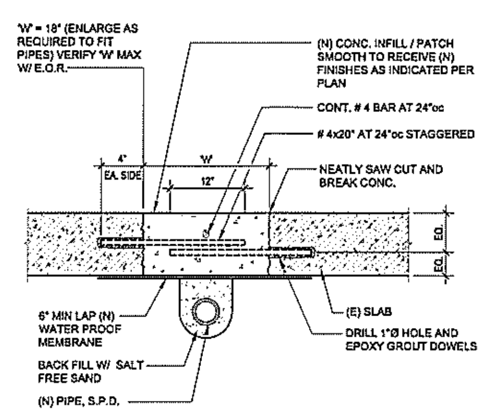


16 PATCHING AT CONCRETE FLOOR
N.T.S. 05-145

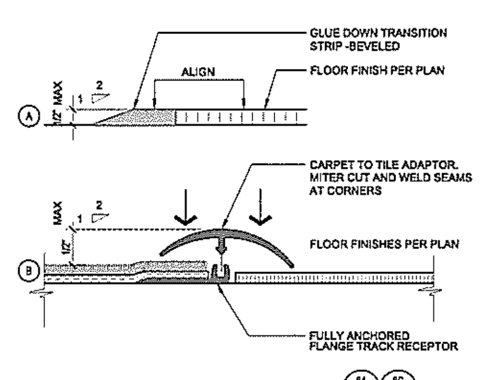


12 FLOOR FINISH TRANSITIONS
FULL SIZE 09-004

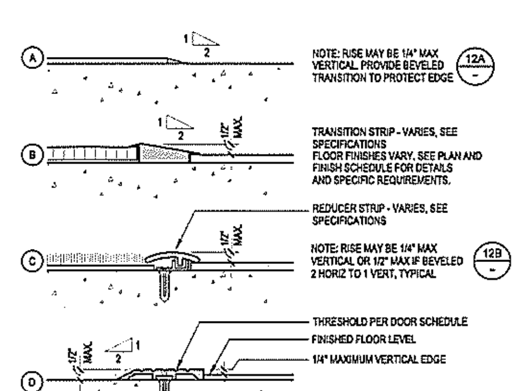


8 GENERAL CONDITIONS FOR ACCESSIBILITY FLOORING TRANSITIONS
3" = 1'-0" 09-003


Craig D. Williams
Architecture
Interiors
Planning
Project
Management
295 Neva Street
Sebastopol, CA
95472
(707) 823-2724
CASpAccess@gmail.com



COPYRIGHT AND CONDITIONAL RIGHT OF USE
Drawings, specifications and all ideas, designs, and arrangements indicated on these drawings and specifications are and shall remain the property of Craig Williams, architect and are intended to be used in connection with this specific project only. No part shall be copied or disclosed to others or otherwise be used in connection with any other work or project other than the specified scope of work for which they have been prepared without the prior written consent of the architect. There shall be no changes or deviations from these drawings or the accompanying specifications without the prior written consent of the Architect - the design professional in responsible charge.

THESE DRAWINGS ARE INSTRUMENTS OF SERVICE THE PROPERTY OF CRAIG D. WILLIAMS, ARCHITECT, COPYRIGHT (C) 2015-2016

Visual contact with these plans and specifications shall constitute conclusive evidence of acceptance of these restrictions.


CRAIG D. WILLIAMS
LICENSED ARCHITECT CRAIG DOUGLAS WILLIAMS No. C026642 REN. 10-31-17 STATE OF CALIFORNIA
08.21.2016

NOT FOR CONSTRUCTION UNLESS SIGNED BY THE ARCHITECT AND STAMPED APPROVED BY THE AUTHORITY HAVING JURISDICTION

AGENCY APPROVALS

ACCESSIBILITY UPGRADES
IVES POOL
AND POOL HOUSE
7400 WILLOW STREET
SEBASTOPOL, CA

PROJECT NUMBER:
082515.00
DATE:
26 JULY, 2016
DRAWN BY:
CW
CHECKED BY:
CW
REVISIONS:

DETAILS
**A3.5**


© THESE DRAWINGS ARE INSTRUMENTS OF SERVICE AND ARE THE SOLE PROPERTY OF CRAIG WILLIAMS ARCHITECT; ANY USE WITHOUT WRITTEN CONSENT IS PROHIBITED.



Aug 23, 2016 - 10:11am cwilliams C:\Documents and Settings\cwilliams\Desktop\CLIENTS\SEBASTOPOL CITY\IVES\CD-A3.5.DWG

## MOUNTING HEIGHT NOTES

1. IT IS THE INTENT OF THE DESIGN THAT ALL ITEMS SHOWN MOUNTED AT TYPICAL HEIGHTS BE ACCESSIBLE TO PERSONS WITH DISABILITIES.
2. THE PURPOSE OF THIS SHEET IS TO ILLUSTRATE TYPICAL MOUNTING HEIGHTS AND, WHERE APPLICABLE, TYPICAL MINIMUM OR MAXIMUM CLEARANCES, AND/OR TYPICAL MOUNTING CONFIGURATIONS FOR A VARIETY OF ITEMS. ATTENTION: THIS SHEET MAY ILLUSTRATE ITEMS OR CONFIGURATIONS WHICH DO NOT OCCUR AS PART OF THE WORK OF THIS PROJECT. REFER TO PLANS, ELEVATIONS, SECTIONS, DETAILS, AND SCHEDULES TO DETERMINE WHICH ITEMS AND CONFIGURATIONS APPLY TO THE WORK OF THIS PROJECT.
3. THE HEIGHTS, CLEARANCES, AND CONFIGURATIONS SHOWN ON THIS SHEET ARE TYPICAL AND SHALL APPLY TO ALL INSTANCES OF THE ITEM (OR GROUP OF ITEMS) SHOWN UNLESS SPECIFICALLY NOTED OR DIMENSIONED OTHERWISE. THE TYPICAL DIMENSIONS SHOWN ON THIS SHEET TAKE PRECEDENCE OVER TYPICAL DIMENSIONS SHOWN ON THE ELECTRICAL OR MECHANICAL DRAWINGS FOR THE MOUNTING OF ITEMS INSTALLED BY THE ELECTRICAL OR MECHANICAL TRADES.
4. THE LOCATION OF EQUIPMENT, TOILET ACCESSORIES, AND OTHER ITEMS ARE SHOWN ON THE PLANS AND ELEVATIONS. WHERE NOT SHOWN OR NOTED OTHERWISE, IN NO EVENT SHALL THE TOP OF HIGHEST PART OF ANY OPERATING DEVICE, RECEPTACLE OPENING, DISPENSING LOCATION, COAT HOOK, REFLECTIVE PART OF MIRROR, SHELF, ETC. BE MOUNTED ABOVE 38" A.F.F.
5. SPECIAL OR NON-TYPICAL MOUNTING HEIGHTS OCCUR ONLY WHERE INDICATED BY ANNOTATED SYMBOLS, BY KEY NOTES, BY NOTES ON PLANS, ELEVATIONS, OR DETAILS, OR BY UNIQUE DIMENSIONS ON ELEVATIONS OR DETAILS.
6. AT SPACE UNDER SINKS AND COUNTERS AT DESIGNATED ACCESSIBLE ROOMS (ALL TOILETS), THERE MUST BE A CLEAR SPACE BENEATH, MIN. 27" HIGH, 17" DEEP AND 30" WIDE (PIPES & EQUIPMENT MAY ENCROACH ON KNEE SPACE IF THEY DO NOT EXTEND WITHIN 9" OF THE FLOOR OR 9" OF THE FRONT OF THE COUNTER) HOT WATER & DRAIN PIPES MUST BE INSULATED AS SPECIFIED.
7. REFER TO AND COMPLY WITH CBC SECTIONS 11B-305 (CLEAR FLOOR AND GROUND SPACE); 11B-306 (KNEE AND TOE CLEARANCE); 11B-307 (PROTRUDING OBJECTS); 11B-308 (REACH RANGES); 11B-309 (OPERABLE PARTS) AND 11B-603.5 (ACCESSORIES).

## 17 MOUNTING HEIGHTS

10-023

NOTES:
1. NOT ALL ITEMS SHOWN ARE NECESSARILY INCLUDED IN THIS PROJECT. SEE INTERIOR ELEVATIONS.
2. DIMENSIONS NOTED APPLY UNLESS NOTED OTHERWISE ELSEWHERE.
3. REFER TO SPECIFICATIONS FOR TYPE OF ACCESSORIES REQUIRED.
4. PROVIDE SOLID BACKING FOR ALL ACCESSORIES. (11) (2)
5. ELEVATIONS SHOWN HEREIN REPRESENT TYPICAL REQUIREMENTS. SEE ELSHWERE FOR PROJECT SPECIFIC VARIATIONS.
6. INSTALLATION OF ALL ACCESSIBLE SANITARY FACILITIES SHALL COMPLY WITH THIS DETAIL AND CHAPTER 11B, 2013 CALIFORNIA BUILDING CODE, AND 2010 ADAS.
7. LIMIT THE PROJECTION OF SURFACE OR SEMI-SURFACE MOUNTED ACCESSORIES FROM ENCROACHING INTO THE REQUIRED CLEAR SPACE MORE THAN 3" FROM THE FACE OF THE WALL WHEN LOCATED BELOW 27" ABOVE FINISHED FLOOR OR ABOVE / BELOW GRAB BARS OR HAND RAILS.
8. SURFACE OR SEMI-SURFACE MOUNTED ACCESSORIES SHALL BE NO CLOSER THAN 1-1/2" TO THE TANGENT OF GRAB BARS OR HANDRAILS. MIN. 12" CLR. ABOVE GRAB BARS OR HANDRAILS.
9. FOR ADDITIONAL INFORMATION SEE (17)

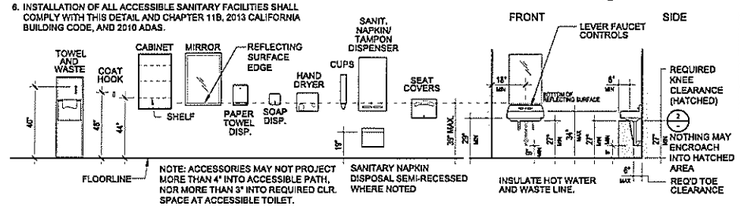


NOTE: ACCESSORIES MAY NOT PROJECT MORE THAN 4" INTO ACCESSIBLE PATH, NOR MORE THAN 3" INTO REQUIRED CLR. SPACE AT ACCESSIBLE TOILET.

ACCESSIBLE ACCESSORIES — ACCESSIBLE LAVATORY

## 13 TYPICAL ACCESSIBLE FIXTURE MOUNTING HEIGHTS

NOT TO SCALE

THIS DIAGRAM ILLUSTRATES THE SPECIFIC REQUIREMENTS OF THE CBC REGULATIONS AND IS INTENDED ONLY AS AN AID FOR BUILDING DESIGN AND CONSTRUCTION.

NOTE: TOILET PAPER DISPENSER AND SANITARY FEMININE NAPKIN RECEPTACLE SHALL BE SEMI-RECESSED, TYPICAL, U.O.N.

SEMI-RECESSED TOILET PAPER HOLDER WITHOUT STOPS (SEAT TISSUE DISP. AND SANITARY NAPKIN DISPOSAL ALSO) 3" MAX. PROJECTION FROM WALL. AT ACCESSIBLE STALL TYPICAL.

TOILET PARTITION OR WALL FLUSH VALVE ON WIDE SIDE OF FIXTURE, 44" MAX HT. LEVER TYPE OPERABLE WITH ONE HAND NOT REQ TIGHT GRASPING, PINCHING OR TWISTING OF THE WRIST -OR- AUTOMATIC FLUSH VALVE

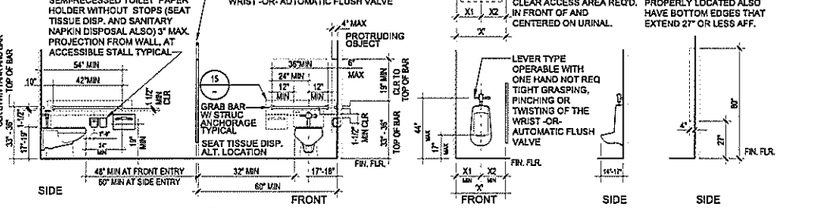


OBJECTS LOCATED BETWEEN 27" AND 80" AFF SHALL PROJECT NO MORE THAN 4" FROM THE FACE OF THE WALL.
USE RECESSED OR SEMI-RECESSED TOILET ROOM ACCESSORIES OR SELECT UNITS THAT WHEN PROPERLY LOCATED ALSO HAVE BOTTOM EDGES THAT EXTEND 27" OR LESS AFF.

WALL MOUNTED TOILET AT ACCESSIBLE STALL (TANK TYPE SHOWN DASHED) — ACCESSIBLE URINAL — PROJECTING OBJECTS

10-006

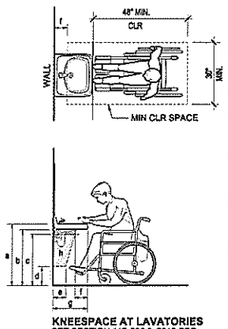


NOTES:
1. SMOOTH (NON-ABRASIVE FINISH) AT WALLS AT OPEN KNEE SPACE.
2. FINISH END (PANELS) OF ADJACENT CASEWORK WHERE OCCURS
3. EXTEND BASE CONTINUOUSLY AT PERIMETER OF KNEE SPACE.
3. EXTEND FINISH FLOORING CONTINUOUSLY INTO KNEE SPACE.
4. NO SHARP EDGES OR COARSE SURFACES. ALL SURFACES OF FIXTURE PIPES AND OTHER ELEMENTS SHALL BE SMOOTH AND NON-ABRASIVE.
5. REQUIRED CLEAR FLOOR SPACE MAY EXTEND UNDER FIXTURE ONLY TO THE EXTENT CLEAR KNEE SPACE IS PROVIDED (SEE PROFILE)
6. IF HOT WATER SUPPLY PIPES ARE PRESENT HOT WATER SUPPLY AND WASTE PIPES SHALL BE INSULATED TO PREVENT CONTACT

REQUIRED KNEE SPACE

| | |
|---|---|
| a | = 34" MAX. |
| b | = 29" MIN AT LAVATORIES |
| c | = 27" MIN CLEAR |
| d | = 9" MIN TOE CLEARANCE |
| e | = 11" MIN AT 9" A.F.F. |
| f | = 8" MIN AT 27" A.F.F. |
| g | = 17" MIN - 19" MAX |
| h | = ENCROACHMENT ZONE |

## 18 ACCESSIBLE KNEESPACE REQUIREMENTS

NO SCALE — 06-041-C

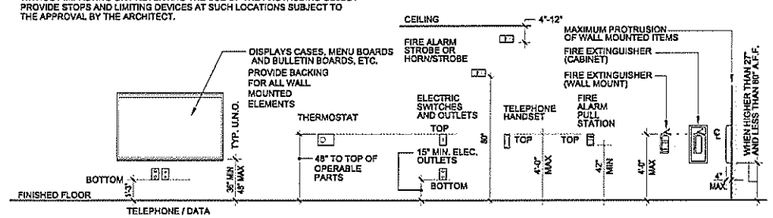


NOTES:
1. NOT ALL ITEMS SHOWN ARE NECESSARILY INCLUDED IN THIS PROJECT. SEE INTERIOR ELEVATIONS, IF PROVIDED.
2. DIMENSIONS NOTED APPLY UNLESS NOTED OTHERWISE ELSEWHERE.
3. CAREFULLY COORDINATE LOCATIONS OF ITEMS PROTRUDING FROM WALL SUCH THAT ANY ADJACENT OPERABLE COMPONENT MAY ACHIEVE FULL OPERATION WITHOUT IMPACTING OR PREVENTING THE USE OF THE PROTRUDING OBJECT PROVIDE STOPS AND LIMITING DEVICES AT SUCH LOCATIONS SUBJECT TO THE APPROVAL BY THE ARCHITECT.
4. CAREFULLY COORDINATE LOCATIONS OF ITEMS SUCH THAT A UNIFORM, AND WHERE INDICATED, A SYMMETRICAL LAYOUT IS ACHIEVED. ALIGN DEVICES NEATLY AT THEIR RESPECTIVE MOUNTING HEIGHTS. CAREFULLY COORDINATE WITH FRAMING AND ROUGH-IN TO PROVIDE FOR BACKING SEE DETAIL 16/A3.7 AND 20/A3.7.

## 14 TYPICAL FIXTURE MOUNTING HEIGHTS

NOT TO SCALE — 12-015

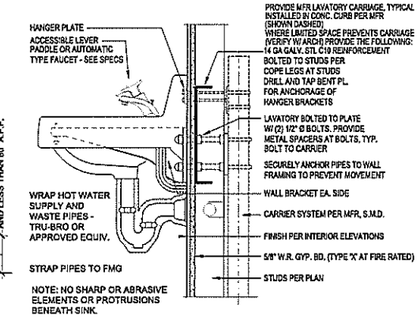


NOTE: NO SHARP OR ABRASIVE ELEMENTS OR PROTRUSIONS BENEATH SINK.

## 6 LAVATORY ANCHORAGE

1 1/2" = 1'-0" — 10-008

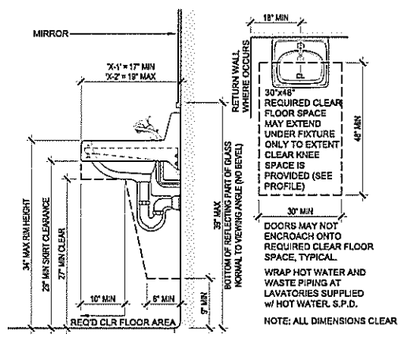


NOTE: ALL DIMENSIONS CLEAR

## 2 ACCESSIBLE LAVATORY CLEARANCE

NO SCALE — 01-024

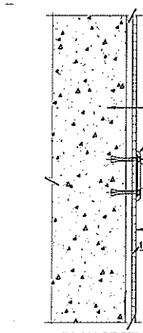


PLAN SECTION

## 19 GRAB BAR ANCHORAGE

3" = 1'-0" — 10-005 A

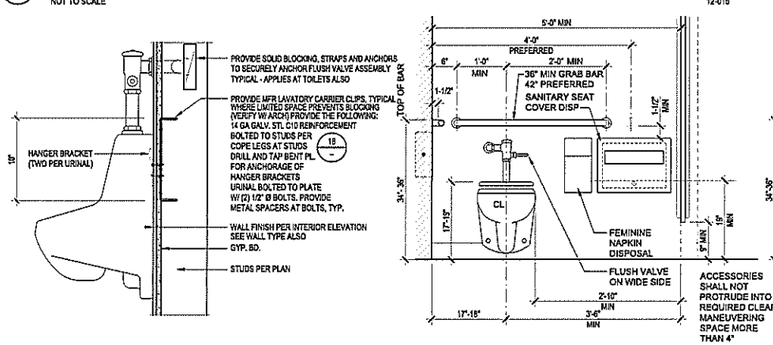


## 11 ACCESSIBLE TOILET FIXTURE AND ACCESSORY MOUNTING REQUIREMENTS

3/4" = 1'-0" — 15-006-A




## 3 ACCESSIBLE TOILET ROOM

1/4" = 1'-0" — 01-007

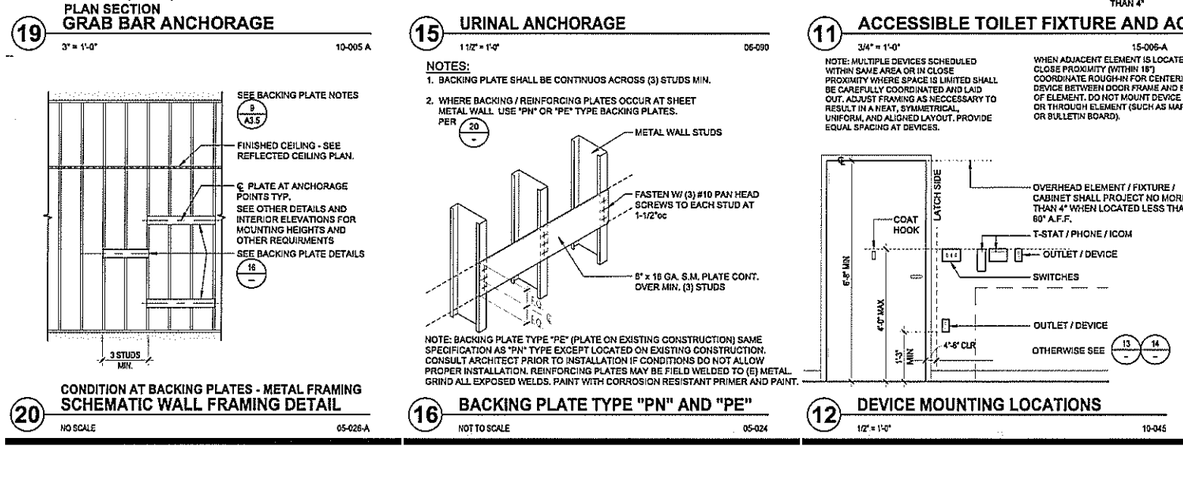


## 20 CONDITION AT BACKING PLATES - METAL FRAMING SCHEMATIC WALL FRAMING DETAIL

NO SCALE — 05-026-A

NOTES:
1. BACKING PLATE SHALL BE CONTINUOS ACROSS (3) STUDS MIN.
2. WHERE BACKING / REINFORCING PLATES OCCUR AT SHEET METAL WALL USE "PN" OR "PE" TYPE BACKING PLATES. PER (20)

NOTE: BACKING PLATE TYPE "PE" (PLATE ON EXISTING CONSTRUCTION) SAME SPECIFICATION AS "PN" TYPE EXCEPT LOCATED ON EXISTING CONSTRUCTION. CONSULT ARCHITECT PRIOR TO INSTALLATION IF CONDITIONS DO NOT ALLOW PROPER INSTALLATION. REINFORCING PLATES MAY BE FIELD WELDED TO (E) METAL. GRIND ALL EXPOSED WELDS. PAINT WITH CORROSION RESISTANT PRIMER AND PAINT.

## 16 BACKING PLATE TYPE "PN" AND "PE"

NOT TO SCALE — 05-024

NOTE: MUTIPLE DEVICES SCHEDULED WITHIN SAME AREA OR IN CLOSE PROXIMITY WHERE SPACE IS LIMITED SHALL BE CAREFULLY COORDINATED AND LAID OUT, ADJUST FRAMING AS NECCESSARY TO RESULT IN A NEAT, SYMMETRICAL, UNIFORM, AND ALIGNED LAYOUT. PROVIDE EQUAL SPACING AT DEVICES.

WHEN ADJACENT ELEMENT IS LOCATED IN CLOSE PROXIMITY (WITHIN 18") COORDINATE ROUGH-IN FOR CENTERING DEVICE BETWEEN DOOR FRAME AND EDGE OF ELEMENT. DO NOT MOUNT DEVICE OVER OR THROUGH ELEMENT (SUCH AS MARKER OR BULLETIN BOARD).

## 12 DEVICE MOUNTING LOCATIONS

1/2" = 1'-0" — 10-045

## 8 CONDITION AT SURFACE MOUNTED F.E. BRACKET FIRE EXTINGUISHER MOUNTING

1 1/2" = 1'-0" — 10-059

## 4 FIRE EXTINGUISHER CABINET MOUNTING

1 1/2" = 1'-0" — 10-058


Craig D. Williams
Architecture
Interiors
Planning
Project Management

295 Nava Street
Sebastopol, CA
95472

(707) 823-2724
CASpAccess@gmail.com



COPYRIGHT AND CONDITIONAL RIGHT OF USE
Drawings, specifications and all ideas, designs, and arrangements indicated on these drawings and specifications are and shall remain the property of Craig Williams, architect and are intended to be used in connection with this specific project only. No part shall be copied or disclosed to others or otherwise be used in connection with any other work or project other than the specified scope of work for which they have been prepared without the prior written consent of the architect. There shall be no changes or deviations from these drawings or the accompanying specifications without the prior written consent of the Architect - the design professional in responsible charge.

THESE DRAWINGS ARE INSTRUMENTS OF SERVICE THE PROPERTY OF CRAIG D. WILLIAMS, ARCHITECT, COPYRIGHT © 2013-2019

Visual contact with these plans and specifications shall constitute conclusive evidence of acceptance of these restrictions.


CRAIG D. WILLIAMS

LICENSED ARCHITECT CRAIG DOUGLAS WILLIAMS No. C029542 REN. 10-31-17 STATE OF CALIFORNIA

08.21.2019

NOT FOR CONSTRUCTION UNLESS SIGNED BY THE ARCHITECT AND STAMPED APPROVED BY THE AUTHORITY HAVING JURISDICTION

AGENCY APPROVALS

ACCESSIBILITY UPGRADES
IVES POOL
AND POOL HOUSE
7400 WILLOW STREET
SEBASTOPOL, CA

PROJECT NUMBER: 082515.00
DATE: 28 JULY, 2016
DRAWN BY: VW
CHECKED BY: CW
REVISIONS:

MOUNTING HEIGHTS
TOILET ROOM
MISC DETAILS
NOTES

**A3.6**


© THESE DRAWINGS ARE INSTRUMENTS OF SERVICE AND ARE THE SOLE PROPERTY OF CRAIG WILLIAMS ARCHITECT. ANY USE WITHOUT WRITTEN CONSENT IS PROHIBITED.



Aug 23, 2016 - 7:56am cwilliams C:\Documents and Settings\cwilliams\Desktop\CLIENTS\SEBASTOPOL CITY\VES\CD-A3.6.dwg

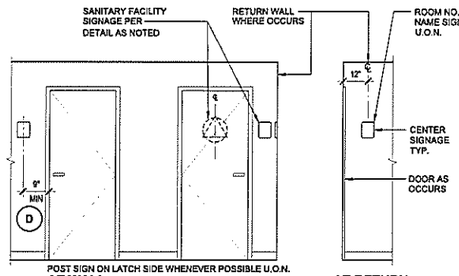


A AT WALL ADJACENT TO DOORS

B AT RETURN WALL ADJACENT TO DOORS

NOTE: WHEN SIGN CANNOT BE MOUNTED ON STRIKE SIDE OF DOOR, MOUNT ON ADJACENT RETURN WALL WHERE OCCURS IF WITHIN 36" (PREFERABLE) OR ON HINGE SIDE OF DOOR

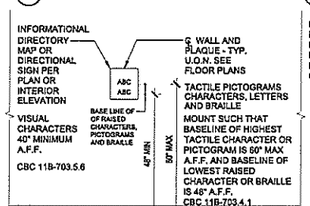


C MOUNTING HEIGHT, U.O.N.

D CLEARANCE

17 TYPICAL SIGNAGE LOCATIONS

N.T.S. 10-018-A

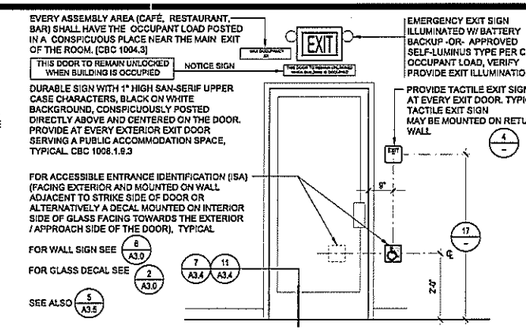


10 DOOR SIGNAGE

1/2" = 1'-0" 10-014B

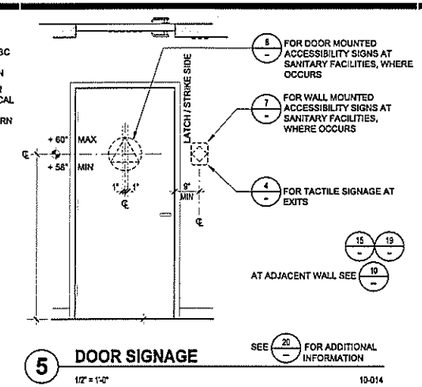


5 DOOR SIGNAGE

1/2" = 1'-0" 10-014

## SIGN ACCESSIBILITY REQUIREMENTS

1. PROVIDE A PERMANENT DURABLE SIGN OR DECAL AT THE EXTERIOR ADJACENT TO EACH ACCESSIBLE ENTRY DOOR AND ELEVATOR DOOR (EXCEPT SANITARY FACILITIES WHICH REQUIRE SPECIAL SIGNS). THE SIGN SHALL BE A MINIMUM OF 6-INCHES SQUARE AND SHALL CONSIST OF THE INTERNATIONAL SYMBOL OF ACCESSIBILITY (ISA). COMPLY WITH CBC 1117B.5.8.1.2 AND CBC 11278.3. SEE CBC FIGURE BELOW. SEE DETAIL 6 / A3.0 ALSO.

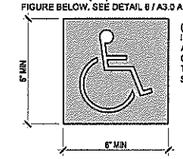


(CBC FIGURE 11B-703.7). INTERNATIONAL SYMBOL OF ACCESSIBILITY (ISA) - WHITE FIGURE ON BLUE BACKGROUND EQUIVALENT TO COLOR 15090 IN FEDERAL STANDARD 595B.

2. PROVIDE TACTILE SIGNAGE COMPLYING WITH THE FOLLOWING AT ALL EXIT DOORS: EACH GRADE-LEVEL EXTERIOR EXIT DOOR (TYPICALLY SAME AS ENTRANCE DOORS) SHALL BE IDENTIFIED BY TACTILE SIGN WITH WORD "EXIT" IN RAISED SAN-SERIF LETTERS AND ACCOMPANYING CALIFORNIA CONTRACTED GRADE II BRAILLE LOCATED DIRECTLY BENEATH THE TEXT. PLACE ADJACENT TO DOOR ON LATCH SIDE WITH CENTER OF THE SIGN 9" MINIMUM AND 12" MAXIMUM FROM THE LATCH JAMB. SEE DETAILS 5, 10, 17, AND 20 SHEET 3.5 ALSO.

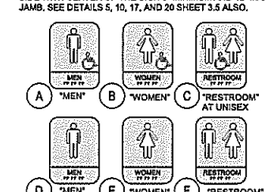


SIGN TYPES

NOT ALL SIGN TYPES ARE NECESSARILY USED THIS PROJECT. SEE SIGN LEGENDS AND SCHEDULES

TYPES A, B, C -WHEELCHAIR ACCESSIBLE FACILITIES
TYPES D, E, F - (W / ISA) NON-WHEELCHAIR (NO ISA) ACCESSIBLE FACILITIES

NOTES:
RADIUS CORNERS OF SIGN AND EASE / BEVEL EDGES OF SIGN EDGES AND EDGES OF RAISED LETTERS, TYPICAL

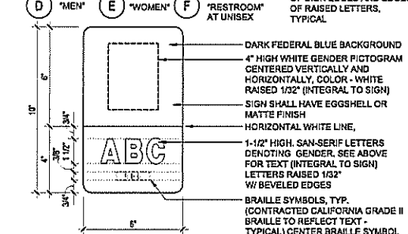


7 SANITARY FACILITY SIGNAGE

TYPICAL REQUIREMENTS FOR BRAILLE AND RAISED CHARACTER SIGNS

3" = 1'-0" 10-020

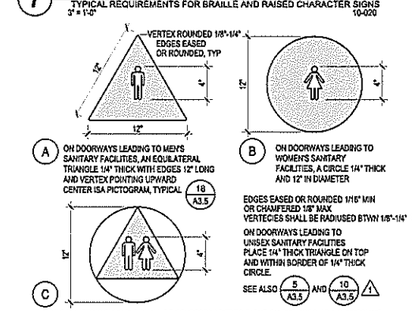


NOTE: NO BRAILLE THESE SIGNS - NON-WHEELCHAIR ACCESSIBLE

8 TOILET ROOM IDENTIFYING SYMBOLS

NO SCALE 10-010-D

## DOOR REQUIREMENTS

AT EXISTING EXTERIOR ENTRY DOORS AND INTERIOR DOORS PROVIDE THE FOLLOWING:

1. LEVER TYPE OPERATING HARDWARE. ACCESSIBLE DOOR HARDWARE TO BE PROVIDED BY CONTRACTOR AND COORDINATED WITH DOOR FUNCTION AND EXISTING PHYSICAL CHARACTERISTICS, INTEGRAL REINFORCING AND ASSEMBLY, VERIFY CONDITIONS AND ADJUST FOR PROPER FIT, FUNCTION, SECURITY AND ACCESSIBILITY.
2. FLOOR(S) OR LANDING(S) SHALL NOT BE MORE THAN 1/2" LOWER THAN THE TOP OF THE THRESHOLD OF THE DOOR, AND LANDINGS SHALL BE CONSTRUCTED WITH A MAXIMUM GRADIENT OF 2% IN ANY DIRECTION FOR A MINIMUM OF 60 INCHES MEASURED PERPENDICULAR TO THE CLOSED DOOR AND 24 INCHES MEASURED FROM THE DOOR STRIKE ON THE EXTERIOR SIDE.

   WHERE EXITING THRESHOLDS DO NOT COMPLY, SELECT APPROPRIATE NEW SADDLE TYPE THRESHOLD OR PROVIDE A THRESHOLD RAMP (PEMKO OR APPROVED EQUIVALENT) THAT CREATES A SMOOTH TRANSITION NOT STEEPER THAN 1:12. SET THRESHOLD / THRESHOLD RAMP IN FULL BED OF MASTIC ON CLEAN PREPARED SURFACE. SECURELY ANCHOR TO FLOOR/GROUND WITH MANUFACTURER APPROVED FASTENERS FOR POSITIVE ANCHORAGE.
3. PROVIDE DOOR MOUNTED SANITARY FACILITY SIGNS PER SIGN LEGEND AND WHERE INDICATED ON PLANS. EVERY SANITARY FACILITY SHALL HAVE APPROPRIATE DOOR MOUNTED SIGNS COMPLYING WITH ACCESSIBILITY REQUIREMENTS.
4. BOTTOM 10" OF FACE OF DOOR (INTERIOR AND EXTERIOR) SHALL BE SMOOTH AND UNINTERRUPTED BY ANY ITEM SUCH AS AN ATTACHED ELEMENT, PROTRUSION, RECESS OR CUTOUT. WITHIN THE BOTTOM 10" OF THE FACE OF THE DOOR REMOVE DOOR HOLD-OPENS, STOPS, AND SUCH OTHER HARDWARE THAT PROTRUDES, ALONG WITH ANY TRIM, MAIL SLOTS ETC. AND FILL HOLES, CUTOUTS AND RECESSES AS OCCUR FOR A FLUSH, SMOOTH SURFACE. REFINISH DOOR SMOOTH TO EXTENT REQUIRED FOR A DURABLE, UNIFORM, WEATHER RESISTANT, CLEAN ABLE SURFACE. THE ENTIRE FACE OF THE DOOR AFFECTED SHALL BE REFINISHED NEW. PREPARE EXISTING FINISHES TO REMAIN SUCH AS LIGHTLY SANDING AS PER PAINT MANUFACTURER'S INSTRUCTIONS FOR PROPER ADHESION OF PAINT. MATCH EXISTING FINISH. VERIFY ALL COLORS AND FINISHES WITH OWNER. SEE DETAIL 16 THIS SHEET.
5. ACCESSIBILITY REQUIREMENTS: CLEAR FINISHED OPENING WIDTH WHEN DOOR IS IN 90° OPEN POSITION SHALL BE 32" MINIMUM. CLEAR FINISHED OPENING HEIGHT SHALL BE 80" MINIMUM. NOTE: VERIFY EXISTING CONDITIONS AS THESE WILL REQUIRE CAREFUL FIELD COORDINATION FOR FRAME DEPTH.
7. FOR EGRESS PURPOSES, ALL INTERIOR EXIT DOORS SERVING OCCUPIED SPACES SHALL BE BE EQUIPPED WITH HARDWARE THAT IS OPERABLE FROM THE INSIDE WITHOUT THE USE OF A KEY OR ANY SPECIAL KNOWLEDGE OR PARTICULAR EFFORT.
8. PRIOR TO ORDER AND INSTALLATION CONTRACTOR SHALL COORDINATE WITH THE OWNER'S REPRESENTATIVE FOR LOCKING, LATCHING AND KEYING REQUIREMENTS FOR BUILDING USE AND SECURITY.
9. ALL DOOR HARDWARE SHALL CONFORM TO TITLE 24 ACCESSIBILITY AND ADA REQUIREMENTS. PROVIDE ACCESSIBLE TYPE PUSH-PULL SYSTEM DESIGNED FOR USE IN THE DOOR SELECTED.
10. HAND-ACTIVATED HARDWARE TO BE INSTALLED BETWEEN 34" TO 44" A.F.F.; LEVER-TYPE HARDWARE, PANIC BARS, PUSH-PULL ACTIVATING; LEVER HANDLE FOR THUMB TURN DEAD BOLT PER CBC SEC. 11B-404.2.7.
11. COORDINATE INTERFACE LOCATION WITH ALL DOOR HARDWARE. PROVIDE WALL STOPS LOCATE DOOR STOPS SO THAT THE DOOR OPERATING HARDWARE IS PREVENTED FROM IMPACTING ADJACENT WALL FINISH (ADJACENT ELEMENT) OR THAT IT CLEARS THE PARTITION (ADJACENT ELEMENT) BY 1/2" AND DOOR OPENS TO A 90° MIN SWING. COORDINATE INTERFACE LOCATION FOR HOLD OPEN DEVICES.
12. CONTRACTOR TO FIELD VERIFY ALL DOOR HARDWARE DOOR FRAME CONDITIONS FOR PROPER FIT AND FUNCTION OF NEW HARDWARE.
13. COORDINATE, LOCATE AND PROVIDE DOORS AND FRAMES COMPLETE WITH HARDWARE FITTINGS AND ACCESSORIES, WHETHER SPECIFIED OR NOT, REQUIRED FOR THE PROPER FIT AND OPERATION IN COMPLIANCE WITH THE DESIGN INTENDED FOR THE SPECIFIC OPENINGS AND TO MEET OR EXCEED THE MOST STRINGENT REQUIREMENTS OF BOTH STATE AND FEDERAL ACCESSIBILITY STANDARDS.
14. COORDINATE, LOCATE AND PROVIDE LEVEL LANDINGS, THRESHOLD CONDITIONS AND TRANSITIONS ALONG PATH OF TRAVEL TO MEET OR EXCEED THE MOST STRINGENT REQUIREMENTS OF BOTH STATE AND FEDERAL ACCESSIBILITY STANDARDS. SEE DETAILS 8 AND 12 SHEET A3.4. APPLY THE APPROPRIATE DETAIL TO MEET SPECIFIC CONDITIONS PRESENT IN THE FIELD, VERIFY.
15. COORDINATE, LOCATE AND PROVIDE REQUIRED WHEELCHAIR LEVEL (2% MAX SLOPE) MANEUVERING CLEARANCE OF SIZE AND CONFIGURATION TO MEET OR EXCEED THE MOST STRINGENT REQUIREMENTS OF BOTH STATE AND FEDERAL ACCESSIBILITY STANDARDS. SEE DETAILS 7 AND 8 HIS SHEET. APPLY THE APPROPRIATE CONSTRUCTION TO MEET SPECIFIC CONDITIONS PRESENT IN THE FIELD, VERIFY.
15. WHERE ANY EXISTING CONDITIONS PREVENT THE PROPER APPLICATION OF ANY OF THESE REQUIREMENTS OR THOSE UNDER STATE AND FEDERAL ACCESSIBILITY REGULATIONS, THE ARCHITECT SHALL FIRST BE CONSULTED AND THE AHJ BUILDING OFFICIAL SHALL PROVIDE A WRITTEN DETERMINATION AND APPROVAL FOR ANY DEVIATIONS FROM THESE STANDARDS..

## DOOR HARDWARE REQUIREMENTS

1. HAND ACTIVATED DOOR HARDWARE SHALL BE ACCESSIBLE LEVER TYPE. CALIFORNIA STATE FIRE MARSHALL APPROVED TYPES ONLY. SEE DETAIL 19 THIS SHEET ALSO
2. SUBMIT MANUFACTURER CUT SHEETS FOR ALL HARDWARE.
3. ALL HARDWARE SHALL BE HEAVY DUTY, STAINLESS STEEL FABRICATION, FIT FOR PURPOSE AND FUNCTION, SUITABLE FOR THE MARINE ENVIRONMENT AT THE SITE OF THE WORK.
4. PROVIDE ALL APPURTENANCES, ANCHORS, FASTENERS, SHIMS, TRIM, CAULKING, FLASHING AND OTHER ITEMS, WHETHER SPECIFICALLY NOTED OR NOT AS NECESSARY FOR AND COORDINATED WITH EXISTING CONDITIONS FOR PROPER FIT AND FUNCTION, OPERATION AND SECURE ANCHORAGE TO RESULT IN A DURABLE, VANDAL RESISTANT ASSEMBLY. VERIFY OWNER'S KEY AND FUNCTION REQUIREMENTS FOR EACH OPENING PRIOR TO PROCUREMENT. COORDINATE LOCK CORE AND KEYWAYS WITH KEYING REQUIREMENTS.
5. PROVIDE REPLACEMENT OR RETROFIT ACCESSIBLE THRESHOLDS AS NECESSARY TO RETROFIT GROUND LEVEL / PATH OF TRAVEL TRANSITION TO RESULT IN AN ACCESSIBLE CONDITION REPRESENTING REASONABLE EQUIVALENT FACILITATION THAT ALLOWS SAFE, CONVENIENT AND ACCESSIBLE PASSAGE THROUGH OPENING. OWNER'S REPRESENTATIVE TO REVIEW AND APPROVE MANUFACTURER'S CUT SHEETS PRIOR TO PROCUREMENT.
6. PREPARE DOORS FOR HARDWARE SPECIFIED, TEST AND ADJUST DOORS AND DOOR HARDWARE FOR SMOOTH, QUIET OPERATION, AND ACCESSIBILITY COMPLIANCE BEFORE FINAL INSPECTION AND ACCEPTANCE.

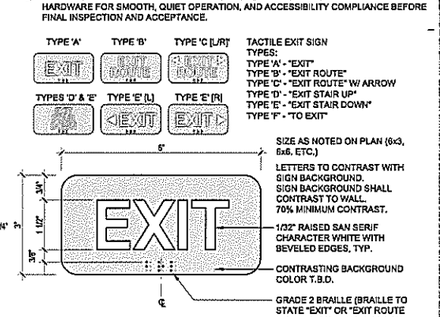


4 EXIT SIGN - TACTILE

HALF SCALE 10-095-A

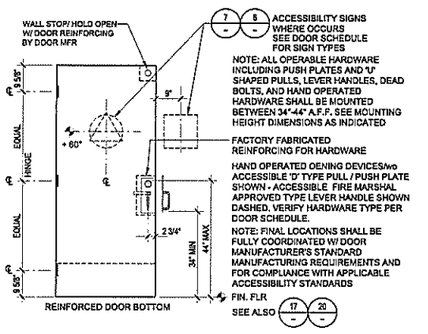


19 DOOR HARDWARE LOCATIONS

1/2" = 1'-0" 10-037

PERMANENT SIGNAGE TO BE INSTALLED ON THE WALL ADJACENT TO THE LATCH SIDE OF THE DOOR. MOUNTING LOCATION MUST ALLOW A PERSON TO APPROACH WITHIN 3" OF SIGNAGE WITHOUT ENCOUNTERING PROTRUDING OBJECTS OR STANDING WITHIN THE SWING PATH OF THE DOOR. [CBC 11B-703.4.2]

| | CORRESPONDING "CALIFORNIA" / "CONTRACTED" GRADE II BRAILLE |
|---|---|
| LITERARY BRAILLE STANDARD DIMENSIONS: | |
| DOT BASE DIAMETER | 0.059 - 0.063 INCHES |
| DOT SPACING CENTER TO CENTER - SAME CELL | 0.100 INCHES |
| DISTANCE BETWEEN CORRESPONDING DOTS IN ADJACENT CELLS | 0.300 INCHES |
| DOT HEIGHT | 0.025 - 0.037 INCHES |
| DISTANCE BETWEEN CORRESPONDING DOTS FROM ONE CELL DIRECTLY BELOW | 0.0395 - 0.400 INCHES |

BRAILLE SHALL CORRESPOND TO TEXT, TYPICAL.SEE CBC 11B-703.3.1

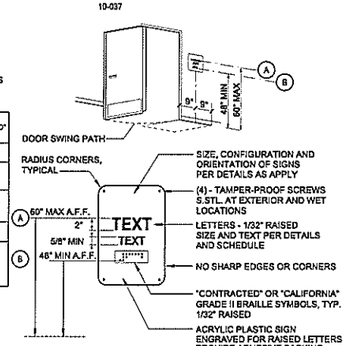


20 TYPICAL SIGNAGE NOTES

3" = 1'-0"

4. VISUAL CHARACTERS ON SIGNAGE SHALL COMPLY WITH THE FOLLOWING: CHARACTERS, SYMBOLS, AND BACKGROUND SHALL HAVE NON-GLARE FINISH (MATTE OR EGG SHELL) COLORS OF CHARACTERS AND SYMBOLS CONTRASTING WITH BACKGROUND, EITHER LIGHT ON DARK BACKGROUND OR DARK ON LIGHT BACKGROUND
   SAN-SERIF CHARACTERS AND NUMBERS WITH CHARACTER FONT MEASURED BY WIDTH OF UPPERCASE "O" IS 60 PERCENT MINIMUM AND 110 PERCENT MAXIMUM OF THE HEIGHT OF UPPERCASE "I" CHARACTERS SIZED ACCORDING TO CBC TABLE 11B-703.5.5

| HEIGHT TO FINISH FLOOR OR GROUND FROM BASELINE OF CHARACTER | HORIZONTAL VIEWING DISTANCE | MINIMUM CHARACTER HEIGHT |
|---|---|---|
| 40 INCHES (1016 MM) TO LESS THAN OR EQUAL TO 70 INCHES (1778 MM) | LESS THAN 72 INCHES (1829 MM) | 5/8 INCH (15.9 MM) |
| | 72 INCHES (1829 MM) AND GREATER | 5/8 INCH (15.9 MM) PLUS 1/8 INCH (3.2 MM) PER FOOT (305 MM) OF VIEWING DISTANCE ABOVE 72 INCHES (1829 MM) |
| GREATER THAN 70 INCHES (1778 MM) TO LESS THAN OR EQUAL TO 120 INCHES (3048 MM) | LESS THAN 180 INCHES (4572 MM) | 2 INCHES (51 MM) |
| | 180 INCHES (4572 MM) AND GREATER | 2 INCHES (51 MM), PLUS 1/8 INCH (3.2 MM) PER FOOT (305 MM) OF VIEWING DISTANCE ABOVE 180 INCHES (4572 MM) |
| GREATER THAN 120 INCHES (3048 MM) | LESS THAN 21 FEET (6401 MM) | 3 INCHES (76 MM) |
| | 21 FEET (6401 MM) AND GREATER | 3 INCHES (76 MM) PLUS 1/8 INCH (3.2 MM) PER FOOT (305 MM) OF VIEWING DISTANCE ABOVE 21 FEET (6401 MM) |

5. BRAILLE ON SIGNAGE SHALL COMPLY WITH CBC 11B-703.3

   ALL BRAILLE PLACED TOGETHER BELOW ENTIRE RAISED TEXT LINES, HORIZONTAL FORMAT, FLUSH LEFT OR CENTERED.

   BRAILLE SHALL BE SEPARATED 3/8" MINIMUM AND 1/2 INCH MAXIMUM FROM ANY OTHER TACTILE CHARACTER / PICTOGRAMS AND 3/8" MINIMUM FROM FROM RAISED BORDERS AND DECORATIVE ELEMENTS

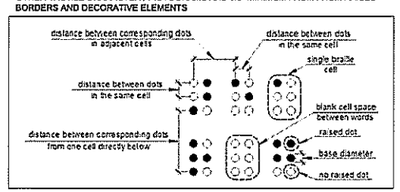


6. EDGES OF SIGNS SHALL BE EASED. CORNERS SHALL BE ROUNDED. EDGES OF TACTILE LETTERS AND CHARACTERS SHALL BE EASED.

## SIGN NOTES:

1. ALL TACTILE SIGNS (U.N.O.) WITH TEXT SHALL HAVE BOTH RAISED LETTERS W/ CONTRACTED GRADE II BRAILLE MESSAGES. GRAPHICS, TEXT, BRAILLE AND GRAPHICS SHALL BE INTEGRAL WITH SIGN BASE MATERIAL.
2. LETTERS, NUMERALS, PICTOGRAMS, GRAPHICS AND BRAILLE SHALL ALL BE RAISED 1/32" FROM ADJOINING BACKGROUND SURFACE OF SIGN EXCEPT FOR SIGNS THAT ARE MOUNTED DIRECTLY ON DOOR (DETAIL 19 THIS SHEET).
3. TEXT SHALL BE SANS SERIF UPPERCASE CHARACTERS BETWEEN 5/8" AND 2" IN HEIGHT BASED ON HEIGHT OF UPPER CASE "I" . SIZE AS NOTED ON DETAILS AS APPLY. NO ITALIC, OBLIQUE, SCRIPT, HIGHLY DECORATIVE OR UNUSUAL FORMS ALLOWED.
4. CHARACTER PROPORTIONS: CHARACTERS SHALL BE SELECTED FROM FONTS WHERE THE WIDTH OFTHE UPPER CASE LETTER "O" IS 60 % MINIMUM AND 110% MAXIMUM OF THE UPPER CASE "I". STROKE THICKNESS OF THE UPPER CASE "I" SHALL BE 15% MAXIMUM OF THE HEIGHT OF THE CHARACTER.
5. CHARACTERS AND PICTOGRAMS SHALL BE IN CONTRASTING COLORS TO THE BACKGROUND. COLORS AND LETTER STYLE SHALL BE AS SELECTED BY THE OWNER / ARCHITECT.
6. BRAILLE SHALL BE "CONTRACTED" OR "CALIFORNIA" GRADE II BRAILLE 1/10" ON CENTER IN EACH CELL W/ 1/20" SPACE BETWEEN CELLS. BRAILLE DOTS ARE RAISED 1/40" ABOVE THE BACKGROUND. BRAILLE SHALL BE BELOW RAISED CHARACTERS WITH A 1/2" SPACE BETWEEN LETTERS AND BRAILLE. ALL BRAILLE COMPONENTS SHALL BE AN INTEGRAL PART OF THE SIGN. APPLIED STRIPS ARE NOT ACCEPTABLE.
7. TEXT AND PICTOGRAMS MUST CONTRAST A MINIMUM OF 70 PERCENT WITH BACKGROUND OF SIGN. BACKGROUND OF SIGN SHALL CONTRAST WITH SURFACE THE SIGN IS MOUNTED UPON. SIGNS MUST HAVE A NON-GLARE / MATTE / EGG SHELL FINISH.
8. ALL SIGNS SHALL COMPLY WITH CCR-T-24, 2013 CBC, SEC. 11B- 703 ANSI-A117.1 AND ADA.
9. THE SIGNS INDICATED ARE FOR CONCEPT AND CONTENT ONLY. THE CONTRACTOR SHALL SUBMIT SHOP DRAWINGS TO THE ARCHITECT FOR REVIEW AND APPROVAL PRIOR TO FABRICATION. SHOP DRAWINGS SHALL SHOW EXACT LAYOUT, CONTENT, COLOR SCHEME, MATERIALS, FASTENERS, AND DETAILS OF FABRICATION. ARCHITECT MAY SELECT FROM FULL LINE OF STANDARD COLORS FROM APPROVED MANUFACTURER'S COLOR CHART AND AS DETERMINED FROM APPROVED SUBMITTAL.
10. WHERE PICTOGRAMS OCCUR ON A SIGN THEY SHALL BE PLACED IN A 6"x6" CLEAR FIELD AND ACCOMPANIED BY TACTILE CHARACTER AND BRAILLE

10-119-A


Craig D. Williams
Architecture
Interiors
Planning
Project Management

295 Neva Street
Sebastopol, CA
95472

(707) 823-2724
CASpAccess@gmail.com



COPYRIGHT AND CONDITIONAL RIGHT OF USE

Drawings, specifications and all ideas, designs, and arrangements indicated on these drawings and specifications are and shall remain the property of Craig Williams, architect and are intended to be used in connection with this specific project only. No part shall be copied or disclosed to others or otherwise be used in connection with any other work or project other than the specified scope of work for which they have been prepared without the prior written consent of the architect. There shall be no changes or deviations from these drawings or the accompanying specifications without the prior written consent of the Architect - the design professional is responsible charge.

THESE DRAWINGS ARE INSTRUMENTS OF SERVICE THE PROPERTY OF CRAIG D. WILLIAMS, ARCHITECT, COPYRIGHT © 2015-2016

Visual contact with these plans and specifications shall constitute conclusive evidence of acceptance of these restrictions.


CRAIG D. WILLIAMS

LICENSED ARCHITECT CRAIG DOUGLAS WILLIAMS No. C026642 REN. 10-31-17 STATE OF CALIFORNIA

08.21.2016

NOT FOR CONSTRUCTION UNLESS SIGNED BY THE ARCHITECT AND STAMPED APPROVED BY THE AUTHORITY HAVING JURISDICTION

AGENCY APPROVALS

ACCESSIBILITY UPGRADES
IVES POOL AND POOL HOUSE
7400 WILLOW STREET
SEBASTOPOL, CA

PROJECT NUMBER: 082515.00
DATE: 28 JULY, 2016
DRAWN BY: CW
CHECKED BY: CW
REVISIONS:

DOOR HARDWARE
DOOR SIGNS
DETAILS
NOTES

A3.7


© THESE DRAWINGS ARE INSTRUMENTS OF SERVICE, AND ARE THE SOLE PROPERTY OF CRAIG WILLIAMS ARCHITECT. ANY USE WITHOUT WRITTEN CONSENT IS PROHIBITED.



Aug 23, 2016 - 7:57am cwilliams C:\Documents and Settings\cwilliams\Desktop\CLIENTS\SEBASTOPOL CITY\IVES\CD-A3.7.dwg

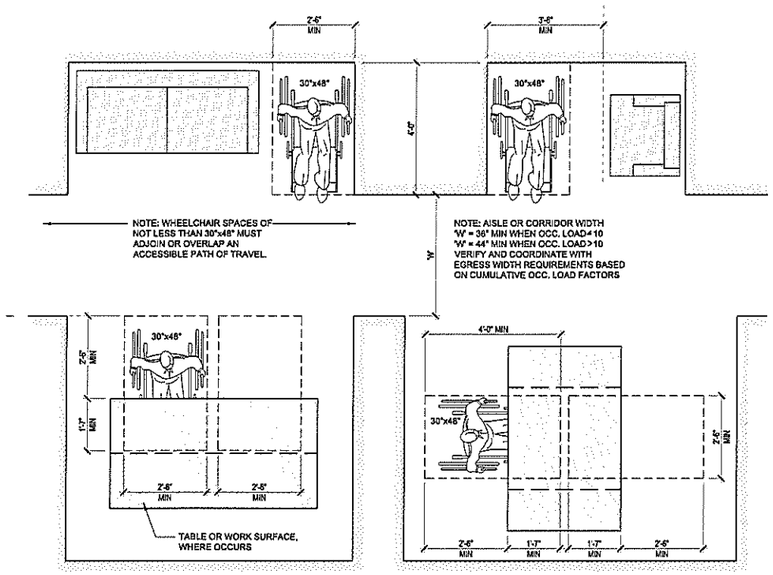


## 18 MINIMUM CLEARANCES FOR SEATING AND TABLES

NO SCALE 01-020-H

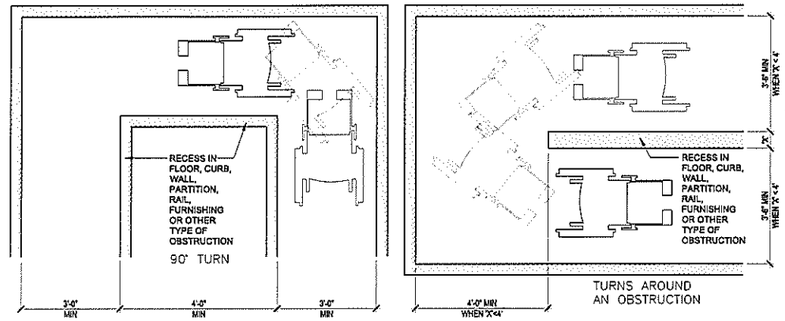


## 9 MANEUVERING CLEARANCE AT AISLES AND CORRIDORS

NO SCALE 01-020-D

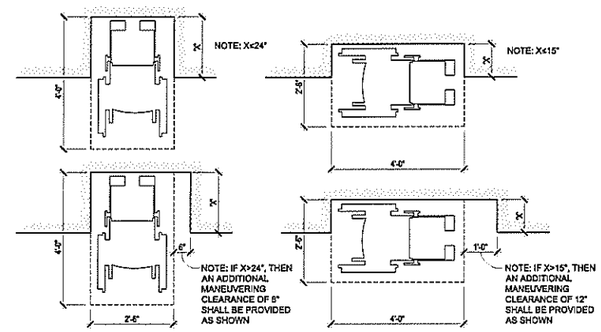


NOTE: DIMENSIONS ARE FROM THE FACE OF FINISH INCLUDING THE FACE OF WALL TRIM, BASE BOARD, AND OTHER ELEMENTS WHICH MAY ENCROACH INTO THE REQUIRED WHEELCHAIR MANEUVERING SPACE

THESE DIAGRAMS ILLUSTRATE THE SPECIFIC REQUIREMENTS OF THE ADAS AND CBC REGULATIONS AND IS INTENDED ONLY AS AN AID FOR DESIGN INTENT AND CONSTRUCTION. ALCOVES SHALL BE LOCATED ALONG AND ADJOIN AN ACCESSIBLE PATH OF TRAVEL. IF ALCOVES ARE UTILIZED TO PROVIDE PASSING SPACE, VERIFY THE WHEELCHAIR SPACE AND PATH OF TRAVEL WIDTH IS 60" MINIMUM IN WIDTH. WHERE ALCOVES SERVE TO PROVIDE ACCESSIBLE MANEUVERING AND/OR AS ACCESS TO FIXTURES, EQUIPMENT, CONTROLS, OPERATING MECHANISMS, OUTLETS AND DEVICES INTENDED FOR PUBLIC USE, THE WHEELCHAIR SPACE FLOOR SHALL BE LEVEL (2% MAX IN ANY DIRECTION).
VERIFY AND COORDINATE THESE REQUIREMENTS FOR COMPLIANCE. ALCOVE CONFIGURATIONS SHALL MEET ALL ACCESSIBILITY REQUIREMENTS.

## 10 CLEAR FLOOR SPACE REQUIREMENTS IN ALCOVES

NO SCALE 01-020-B

# MISC ACCESSIBLE REQUIREMENTS

THE ACCESSIBILITY REQUIREMENTS SHOWN ON THIS SHEET APLY TO THIS PROJECT GENERALLY AND NOT ALL INSTANCES MAY NECESSARILY APPLY OR APPLY IN THE SAME MANNER AS SHOWN IN THESE DIAGRAMMATIC DETAILS. THE DETAILS ARE PROVIDED TO AIDE IN THE COMPREHENSION OF GENERAL REQUIREMENTS AND ARE INTENDED TO BE USDE IN CONJUNCTION WITH DETAILS SPECIFIC TO THE WORK.

# WIDTH OF WALKS / AISLES

CLEAR WIDTH FOR WALKS AND SIDEWALKS SHALL BE 48" MIN.

CLEAR WIDTH OF ACCESS AISLE / CORRIDOR WIDTH FOR SPACES / AREAS WITH AN OCCUPANCY OF LESS THAN 10 SHALL BE 36" MIN.

CLEAR WIDTH OF ACCESS AISLE / CORRIDOR WIDTH FOR SPACES / AREAS WITH AN OCCUPANCY OF 10 OR MORE SHALL BE 44 MIN.

CLEAR WIDTH OF ACCESS AISLE / CORRIDOR SERVING TOILET ROOM FACILITIES SHALL BE 44" MIN.

CLEAR WIDTH OF ACCESS AISLE SERVING ELEMENTS ON ONE SIDE SHALL BE 36" MIN.

CLEAR WIDTH OF ACCESS AISLE SERVING ELEMENTS ON TWO SIDES SHALL BE 44" MIN.

CLEAR WIDTH OF AN ACCESS AISLE / CORRIDOR MAY BE REDUCED TO 32" MIN FOR A RUNNING LENGTH OF 24" MAX PROVIDED THAT REDUCED WIDTH SEGMENTS ARE SEPARATED BY SEGMENTS THAT ARE 48" RUNNING LENGTH THAT ARE 36" MIN WIDE.

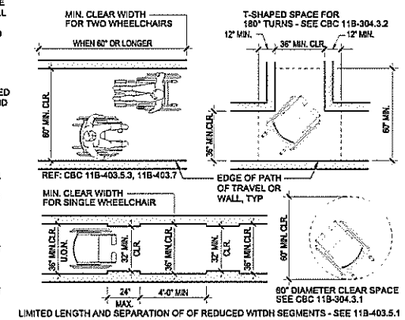


## 2 WHEEL CHAIR ACCESS AND TURNING SPACE
## PATH OF TRAVEL CLEARANCES

REF: CBC 11B-403, 11B-403.5.1 EXCEPTIONS, 11B-403.5.2, 11B-402.5.3.
1/4" = 1'-0" 01-001

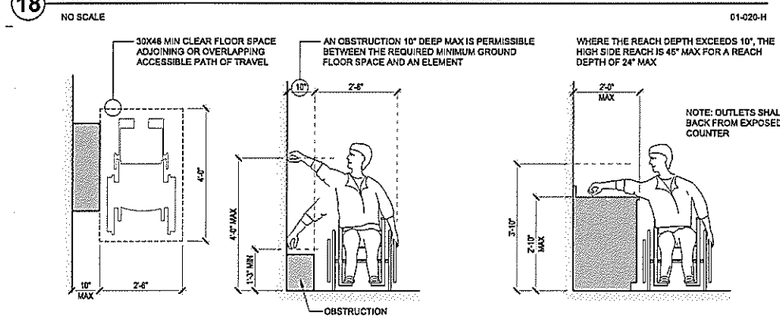


## 19 REACH RANGES

NO SCALE REF: CBC 11B-308.2 11B-308.3 01-020-E

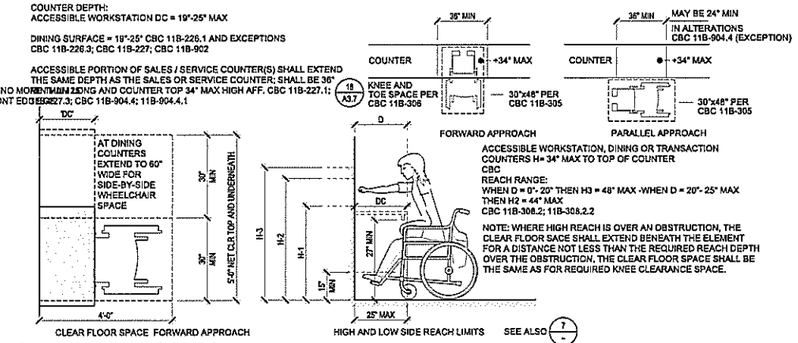


## 11 REACH RANGES

NO SCALE 01-020-F

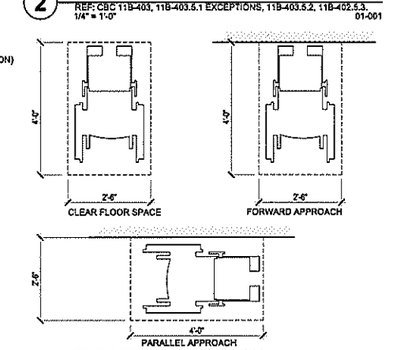


## 3 CLEAR FLOOR SPACE REQUIREMENTS FOR WHEELCHAIRS

NO SCALE 01-020-C

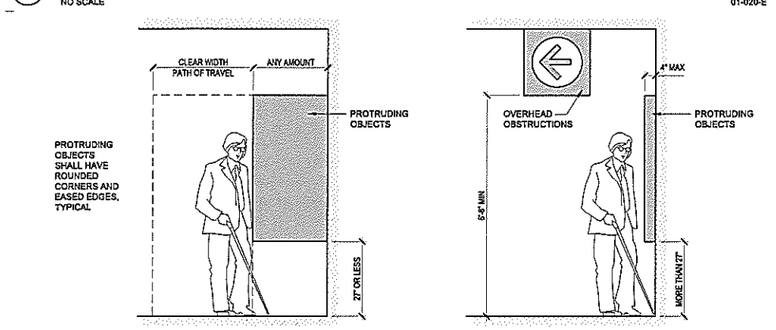


## 20 PROTRUDING / OVERHEAD OBJECTS

NO SCALE 01-020-J

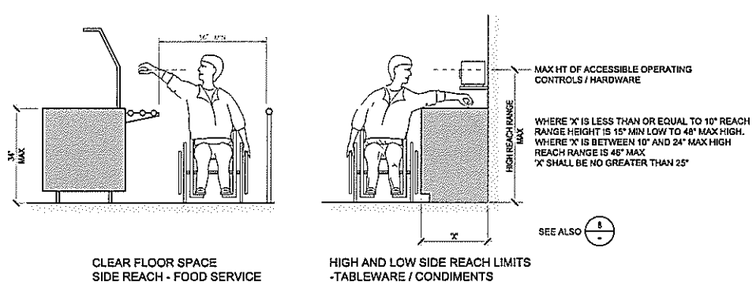


## 12 REACH RANGES

NO SCALE 01-020-G

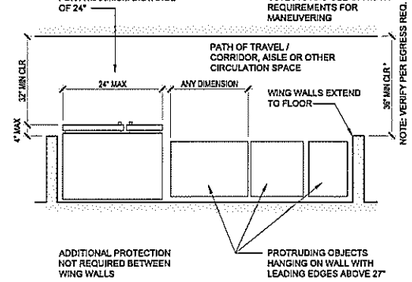


## 4 PROTRUDING HAZARDS

NO SCALE 01-020-K


Craig D. Williams
Architecture
Interiors
Planning
Project
Management

295 Neva Street
Sebastopol, CA
95472

(707) 823-2724
CASpAccess@gmail.com



COPYRIGHT AND CONDITIONAL RIGHT OF USE
Drawings, specifications and all ideas, designs, and arrangements indicated on these drawings and specifications are and shall remain the property of Craig Williams, architect and are intended to be used in connection with this specific project only. No part shall be copied or disclosed to others or otherwise be used in connection with any other work or project other than the specified scope of work for which they have been prepared without the prior written consent of the architect. There shall be no changes or deviations from these drawings or the accompanying specifications without the prior written consent of the Architect - the design professional in responsible charge.

THESE DRAWINGS ARE INSTRUMENTS OF SERVICE THE PROPERTY OF CRAIG D. WILLIAMS, ARCHITECT, COPYRIGHT © 2015-2016

Visual contact with these plans and specifications shall constitute conclusive evidence of acceptance of these restrictions.


CRAIG D. WILLIAMS

LICENSED ARCHITECT CRAIG DOUGLAS WILLIAMS No. C026642 REN. 10-31-17 STATE OF CALIFORNIA

08.21.2016

NOT FOR CONSTRUCTION UNLESS SIGNED BY THE ARCHITECT AND STAMPED APPROVED BY THE AUTHORITY HAVING JURISDICTION

AGENCY APPROVALS

ACCESSIBILITY UPGRADES
IVES POOL
AND POOL HOUSE
7400 WILLOW STREET
SEBASTOPOL, CA

PROJECT NUMBER: 082515.00
DATE: 26 JULY, 2016
DRAWN BY: VR
CHECKED BY: CW
REVISIONS:

TYPICAL ACCESSIBILITY DETAILS NOTES

**A3.8**


© THESE DRAWINGS ARE INSTRUMENTS OF SERVICE AND ARE THE SOLE PROPERTY OF CRAIG WILLIAMS ARCHITECT. ANY USE WITHOUT WRITTEN CONSENT IS PROHIBITED.



Aug 23, 2016 - 7:38am cwilliams C:\Documents and Settings\cwilliams\Desktop\CLIENTS\SEBASTOPOL CITY\IVES\CD-A3.8.dwg

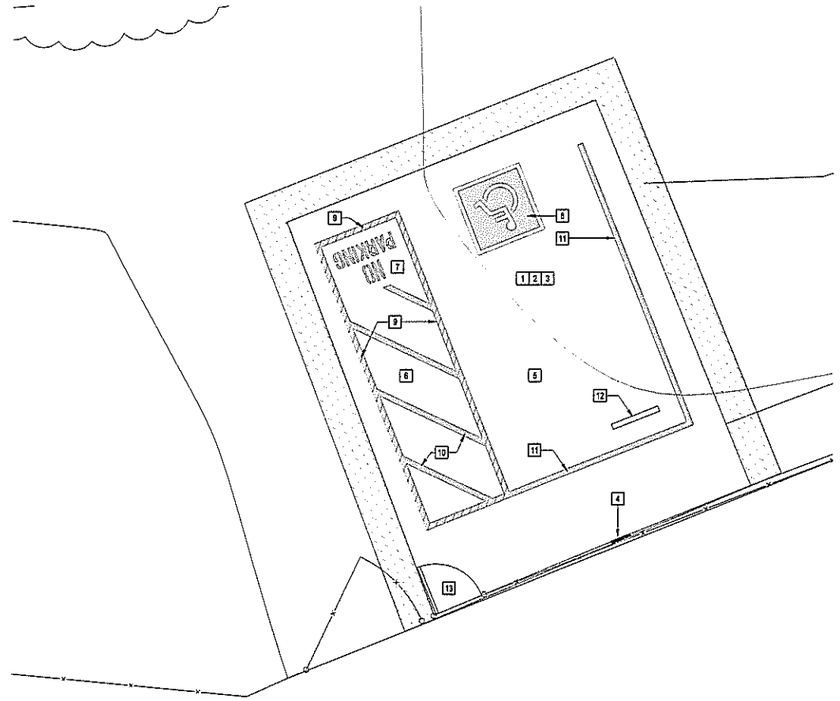


## 3 PARTIAL SITE PLAN

1" = 4'-0" SEE DETAIL COMMON NOTES AND DETECTABLE WARNING NOTES THIS SHEET

## PLAN LEGEND

- ------ ELEMENT OR ITEM TO BE REMOVED
- APPROXIMATE BOUNDARY AND AREA WITHIN WHICH AN ELEMENT IS TO BE REMOVED
- LEVEL AREA. 2.0% MAXIMUM SLOPE IN ANY DIRECTION. SURFACE TO DRAIN WATER TOWARDS (E) DRAINAGE WAYS / DRAINAGE STRUCTURES. STANDING WATER NOT ALLOWED. GRIND / OVERLAY SURFACES TO EXTENT NECESSARY TO COMPLY.
- (N) CONCRETE FLATWORK. FOR CONCRETE SUBJECT TO VEHICULAR LOADS SEE DETAIL .
- APPROXIMATE AC GRIND / OVERLAY TO PROVIDE MAX 1:48 SLOPE IN ANY DIRECTION. V.I.F.
- LANDSCAPED AREA
- PAVEMENT MARKING STRIPE - WHITE .
- PAVEMENT MARKING STRIPE - FED BLUE .

## SHEET KEY NOTES

1. SAWCUT NEATLY AT EDGES OF AC PAVEMENT TO REMAIN. REMOVE AC PAVEMENT COMPLETE IN AREA INDICATED. WHERE (N) AC FLATWORK IS SHOWN AND INDICATED PREPARE (E) GRAVEL BASE TO RECEIVE (N) WORK PER PLAN. MAKE ALL ADJUSTMENTS AS NECESSARY TO RECEIVE (N) WORK IN ACCORDANCE WITH THESE DESIGN DOCUMENTS AND REFERENCED STANDARDS. EXCAVATE AND RE-GRADE TO A DEPTH READY TO RECEIVE (N) WORK. SEE DETAILS AS APPLY FOR AC PAVING SECTION, TACK COAT EDGES, TAPER SLOPES AS NOTED AND IN COMPLIANCE WITH APPLICABLE STANDARDS. PREP PARKING LOT FOR SLURRY SEAL. VERIFY SCOPE OF AC REPAIRS AND SLURRY SEAL COAT WITH OWNER.
2. PREPARE PARKINGSPACE WITHIN WORK AREA FOR NEW WORK. REMOVE DETERIORATED AC PAVEMENT AT LOCATIONS AND TO THE EXTENT IDENTIFIED BY OWNER. PATCH / OVERLAY AC PAVEMENT. SEE SHEET T04 PAVEMENT NOTES.
3. AC PAVEMENT OVERLAY AT PROPOSED ACCESSIBLE PARKING SPACES AND ACCESSIBLE AISLES. ASPHALT CONCRETE OVERLAY TAPER SHALL OCCUR ENTIRELY OUTSIDE ANY AREA DESIGNATED FOR ACCESSIBLE PARKING AND ACCESS AISLE TAPERS TO CONFORM FLUSH TO (E) AC PAVEMENT TO REMAIN. MAXIMUM SLOPE AT TAPER 8%. MAX DESIGN SLOPE AT PARKING AND ACCESS AISLE 1.5% (MAX PER CODE = 2.083%). SEE DETAIL 4 THIS SHEET. SEE ALSO DETAILS AND PAVEMENT NOTES SHEET A3.1, SEE AC PAVEMENT NOTES SHEET T0.4.
4. NEW SIGN AND SIGN POST PER SITE PLAN AND SIGN LEGEND SHEET A1.0. REMOVE VEGETATION, ORGANIC MATTER AND TOPSOIL. EXCAVATE TO A DEPTH READY TO RECEIVE (N) POST FOOTING. SEE DETAIL 8/A3.0 AS APPLY FOR SIGN FOOTINGS.
5. (N) VAN ACCESSIBLE PARKING STALL. 2% MAXIMUM SLOPE IN ANY DIRECTION. GRIND AND / OR PROVIDE AC OVERLAY TO ACHIEVE COMPLIANT SLOPE CONDITIONS. NO ABRUPT CHANGES IN ELEVATION EXCEEDING 1/4" VERTICAL. ANY CHANGE IN ELEVATION BETWEEN 1/4" AND 1/2" SHALL HAVE THE TOP 1/4" BEVELED NO STEEPER THAN 2h:1v. ABRUPT CHANGES IN LEVEL GREATER THAN 1/2" ARE PERMISSIBLE GRIND SMOOTH AS NECESSARY ANY SUCH EXISTING CONDITIONS. PROVIDE NEW STRIPING AND (N) PAVEMENT MARKINGS AS INDICATED. SEE ALSO GENERAL ACCESSIBLE PARKING NOTES SHEET A3.2. AND DETAIL 14/A3.0.
6. (N) ACCESS AISLE. 2% MAXIMUM SLOPE IN ANY DIRECTION. GRIND AND / OR PROVIDE AC OVERLAY TO ACHIEVE COMPLIANT SLOPE CONDITIONS. NO ABRUPT CHANGES IN ELEVATION EXCEEDING 1/4" VERTICAL. ANY CHANGE IN ELEVATION BETWEEN 1/4" AND 1/2" SHALL HAVE THE TOP 1/4" BEVELED NO STEEPER THAN 2h:1v. ABRUPT CHANGES IN LEVEL GREATER THAN 1/2" ARE PERMISSIBLE GRIND SMOOTH AS NECESSARY ANY SUCH EXISTING CONDITIONS. APPLY SLURRY SEAL TO THE FULL AREAS INDICATED FOR (N) DESIGNATED ACCESSIBLE PARKING SPACES AND THEIR ASSOCIATED ACCESS AISLES. PROVIDE NEW STRIPING AND (N) PAVEMENT MARKINGS AS INDICATED. ACCESS AISLE PERIMETER STRIPING 4" WIDE - FEDERAL BLUE / DIAGONAL STRIPES 4" WIDE AT 36" oc - WHITE. SEE ALSO GENERAL ACCESSIBLE PARKING NOTES SHEET A3.2. AND DETAIL 14/A3.0. SEE PAVEMENT MARKING NOTES SHEET T0.6.
7. (N) PAVEMENT MARKING: PREP SURFACES AND PAINT "NO PARKING" 12" HIGH WHITE LETTERS. PAINT WITH PREMIUM QUALITY HEAVY DUTY RATED TRAFFIC PAINT - USE WHITE PAINT APPLIED AT THE MINIMUM RATE OF TWO COATS OF PAINT WITH SUFFICIENT TIME TO ALLOW FULL DRYING / CURING BETWEEN COATS PER MFR. INSTALLATION INSTRUCTIONS. SEE ALSO GENERAL ACCESSIBLE PARKING NOTES SHEET A3.2. AND DETAIL 14/A3.0. SEE PAVEMENT MARKING NOTES SHEET T0.6.
8. (N) PAVEMENT MARKING: PREP SURFACES AND PAINT ISA SYMBOL. PAINT WITH PREMIUM QUALITY HEAVY DUTY RATED TRAFFIC PAINT - USE WHITE AND DARK FEDERAL STANDARD 595, BLUE No. 15180 PAINT APPLIED AT THE MINIMUM RATE OF TWO COATS OF PAINT WITH SUFFICIENT TIME TO ALLOW FULL DRYING / CURING BETWEEN COATS PER MFR. INSTALLATION INSTRUCTIONS. SEE ALSO GENERAL ACCESSIBLE PARKING NOTES SHEET A3.2. AND DETAIL 14/A3.0. SEE PAVEMENT MARKING NOTES SHEET T0.6.
9. (N) PAVEMENT MARKING: PREP SURFACES AND PAINT PERIMETER STRIPES IMMEDIATELY ADJACENT TO DESIGNATED ACCESSIBLE PASSENGER ACCESS AISLE. PAINT WITH PREMIUM QUALITY HEAVY DUTY RATED TRAFFIC PAINT - DARK FEDERAL STANDARD 595, BLUE No. 15180. USE A MINIMUM OF TWO COATS OF PAINT WITH SUFFICIENT TIME TO ALLOW FULL DRYING / CURING BETWEEN COATS PER MFR. INSTALLATION INSTRUCTIONS. SEE ALSO GENERAL ACCESSIBLE PARKING NOTES SHEET A3.2. AND DETAIL 14/A3.0. SEE PAVEMENT MARKING NOTES SHEET T0.6.
10. (N) PAVEMENT MARKING: PREP SURFACES AND PAINT 4 INCH WIDE 45° DIAGONAL STRIPES AT 3 FEET MAXIMUM ON CENTER WITHIN DESIGNATED ACCESSIBLE PASSENGER AISLE. PAINT WITH PREMIUM QUALITY HEAVY DUTY RATED TRAFFIC PAINT - USE WHITE PAINT APPLIED AT THE MINIMUM RATE OF TWO COATS OF PAINT WITH SUFFICIENT TIME TO ALLOW FULL DRYING / CURING BETWEEN COATS PER MFR. INSTALLATION INSTRUCTIONS. SEE ALSO GENERAL ACCESSIBLE PARKING NOTES SHEET A3.2. AND DETAIL 14/A3.0. SEE PAVEMENT MARKING NOTES SHEET T0.6.
11. (N) PAVEMENT MARKING: PREP SURFACES AND PAINT 4 INCH WIDE STRIPES WHERE SHOWN AT DESIGNATED PARKING SPACES. PAINT WITH PREMIUM QUALITY HEAVY DUTY RATED TRAFFIC PAINT - USE WHITE PAINT APPLIED AT THE MINIMUM RATE OF TWO COATS OF PAINT WITH SUFFICIENT TIME TO ALLOW FULL DRYING / CURING BETWEEN COATS PER MFR. INSTALLATION INSTRUCTIONS. SEE ALSO GENERAL ACCESSIBLE PARKING NOTES SHEET A3.2. AND DETAIL 14/A3.0. SEE PAVEMENT MARKING NOTES SHEET T0.6.
12. (N) CONCRETE WHEEL STOP. SEE DETAIL 12/A3.0 AND WHEEL STOP NOTES SHEET T0.6.
13. (N) ACCESSIBLE CHAIN LINK GATE. PROVIDE LEVEL LANDING. SEE DETAIL 19/A3.0.

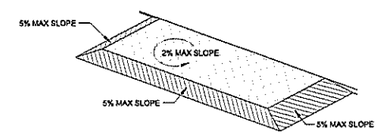


GRIND AND, AS NECESSARY APPLY (N) AC PAVEMENT OVERLAY IN AREA INDICATED TO RESULT IN 2% MAXIMUM SLOPE IN ANY DIRECTION IN THE ENTIRE AREA DESIGNATED FOR ACCESSIBLE PARKING AND ACCESS AISLE. SEE DETAILS 8, 10 AND 14 SHEET A3.1 AND SHEET T.04 FOR ADDITIONAL REQUIREMENTS. CONFORM EDGES FLUSH AND SMOOTH TO ADJOINING SURFACES TO REMAIN. WARPS REQUIRED SHALL OCCUR OUTSIDE OF AREAS REQUIRED TO MEET ACCESSIBILITY STANDARDS. NOTE: STORM WATER FLOW LINES DIRECT WATER TOWARDS (E) FLOW LINES TO REMAIN AND AND INTO (E) STORM WATER FACILITIES. VERIFY CONDITIONS IN FIELD AND MAKE ALL NECESSARY ADJUSTMENTS.

PAVING CONTRACTOR TO VERIFY EXTENT AND CONFIGURATION OF AC SURFACE TREATMENT TO ACHIEVE NO MORE THAN 2% SLOPE IN ANY DIRECTION WITHIN ACCESSIBLE PARKING AND ACCESS AISLE AREA. VERIFY STORMWATER FLOW LINES FOR SUFFICIENT FALL, DRAINAGE STRUCTURE INLETS, AND ADJUST FIELD CONDITIONS TO PREVENT STANDING WATER AND BUILD UP OF DEBRIS / SEDIMENT.

## 4 AC PAVEMENT OVERLAY

PARKING - NOT TO SCALE

## CAUTION

THESE ARCHIVE PLANS, OBTAINED FROM THE OWNER, MAY NOT ACCURATELY REFLECT ACTUAL AS-BUILT CONDITIONS IN EACH AREA WITHIN THE SCOPE OF WORK DEFINED AND DESCRIBED IN THIS PROJECT. PRIOR TO SUBMITTING BID CONTRACTOR SHALL FIELD INSPECT AND VERIFY INFORMATION PROVIDED. CONTRACTOR SHALL BRING ANY DISCREPANCIES BETWEEN THE ARCHIVE INFORMATION, THESE PLANS AND PROPOSED WORK AFFECTING THE PROJECT WORK TO THE ATTENTION OF THE ARCHITECT IN WRITING. SUBMITTING BID INDICATES CONTRACTOR ACCEPTS THESE CONSTRUCTION DOCUMENTS AS SUFFICIENTLY ACCURATE AND COMPLETE TO CARRY OUT THE WORK IN CONFORMANCE WITH THE DESIGN INTENT OF THESE PLANS AND BUILDING CODE REQUIREMENTS.

NOTE: THE ARE STRUCTURAL MEMBERS AND STRUCTURAL SYSTEMS PRESENT AT THE SITE OF THE WORK. IT IS NOT INTENDED FOR ANY STRUCTURAL SYSTEM OR BEARING / SHEAR MEMBER OR ASSEMBLY TO BE MODIFIED AS PART OF THE WORK. EXISTING WATER AND GAS PIPING, SEWER, VENTING, DUCTS, CONDUIT, ELECTRICAL CIRCUITS, DATA - TELEPHONE - SIGNAL, FIRE ALARM, AND OTHER SUCH INFRASTRUCTURE / UTILITIES IS LIKELY PRESENT. THE LOCATIONS, SIZES AND/OR EXTENT OF SUCH ITEMS IS NOT NECESSARILY NOTED OR SHOWN IN THESE CONSTRUCTION DOCUMENTS. IF AND WHERE ANY SUCH ITEMS ARE INDICATED IN THESE PLANS, SUCH INFORMATION HAS BEEN OBTAINED FROM SOURCES OF VARYING RELIABILITY. THE CONTRACTOR IS CAUTIONED TO REVIEW ALL ARCHIVE DOCUMENTS AND FIELD VERIFY THE TYPES, EXTENT, SIZES, LOCATIONS AND DEPTHS OF SUCH LEMENTS AND UTILITIES IN THE AREA WITHIN THE VICINITY OF THE SCOPE WORK AND ITS ENVIRONS SO AS NOT TO ADVERSELY IMPACT OR DAMAGE SAME.

FOR ANY EXCAVATION WORK CONTRACTOR SHALL FIELD VERIFY LOCATION AND DEPTH PRIOR TO ANY EXCAVATION OR IMPROVEMENT. CALL 811 DIG ALERT MIN 48 HRS PRIOR TO EXCAVATING. CONTRACTOR SHALL IN ADVANCE OF COMMENCING ANY EXCAVATION OBTAIN A DIG ALERT TICKET FOR ANY EXCAVATION, IF ANY, ASSOCIATED WITH THIS PROJECT.


Craig D. Williams
Architecture
Interiors
Planning
Project
Management

295 Neva Street
Sebastopol, CA
95472

(707) 823-2724
CASpAccess@gmail.com



COPYRIGHT AND CONDITIONAL RIGHT OF USE

Drawings, specifications and all ideas, designs, and arrangements indicated on these drawings and specifications are and shall remain the property of Craig Williams, architect and are intended to be used in connection with this specific project only. No part shall be copied or disclosed to others or otherwise be used in connection with any other work or project other than the specified scope of work for which they have been prepared without the prior written consent of the architect. There shall be no changes or deviations from these drawings or the accompanying specifications without the prior written consent of the Architect - the design professional in responsible charge.

THESE DRAWINGS ARE INSTRUMENTS OF SERVICE THE PROPERTY OF CRAIG D. WILLIAMS, ARCHITECT, COPYRIGHT © 2018-2019

Visual contact with these plans and specifications shall constitute conclusive evidence of acceptance of these restrictions.


CRAIG D. WILLIAMS

LICENSED ARCHITECT
CRAIG DOUGLAS WILLIAMS
No. C026642
REN. 10-31-17
STATE OF CALIFORNIA

08.21.2019

NOT FOR CONSTRUCTION UNLESS SIGNED BY THE ARCHITECT AND STAMPED APPROVED BY THE AUTHORITY HAVING JURISDICTION

AGENCY APPROVALS

ACCESSIBILITY
UPGRADES
IVES POOL
AND POOL HOUSE
7400 WILLOW STREET
SEBASTOPOL, CA

PROJECT NUMBER:
082515.00
DATE:
28 JULY, 2018
DRAWN BY:
CW
CHECKED BY:
CW
REVISIONS:

DETAILS

**A3.9**


© THESE DRAWINGS ARE INSTRUMENTS OF SERVICE AND ARE THE SOLE PROPERTY OF CRAIG WILLIAMS ARCHITECT. ANY USE WITHOUT WRITTEN CONSENT IS PROHIBITED.



Aug 23, 2018 - 11:50am cwilliams C:\Documents and Settings\cwilliams\Desktop\CLIENTS\SEBASTOPOL CITY\IVES\CD-A3.11.dwg

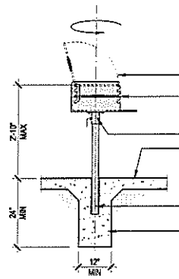


NOTE: REUSE AND INSTALLATION OF (E) BBQ GRILL UNITS IS PART OF THIS PROJECT. (E) GRILLS MAY DIFFER IN CONFIGURATION FROM THAT SHOWN HERE. DIMENSIONS THIS DETAIL APPLY TO INSTALLATION.

(N) GRILL UNIT TO MATCH (E) - ALL (N)AND (E) UNITS BEING RELOCATED SHALL BE INSTALLED SUCH THAT ALL OPERABLE ELEMENTS ARE WITHIN ACCESSIBLE REACH RANGES

## 17 ACCESSIBLE CAMP GRILL

1/2" = 1'-0" 10-401

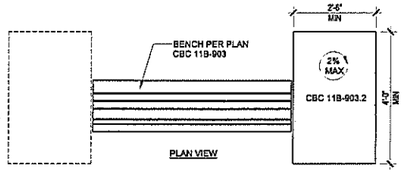


## 13 WHEELCHAIR AREA AT BENCH

1/2" = 1'-0" 02-513-A

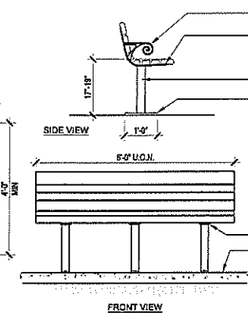


NOTES:
1) ALL STEEL MEMBERS COATED W/ ZINC RICH EPOXY THEN FINISHED WITH BLACK POLYESTER POWDER COATING.
2) DuMor PRODUCT OR EQUIVALENT.

## 9 SITE BENCH

1/2" = 1'-0" 02-513

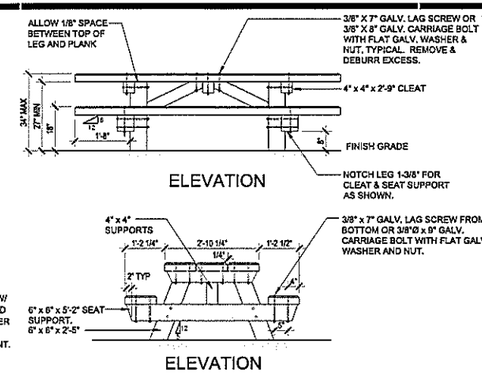


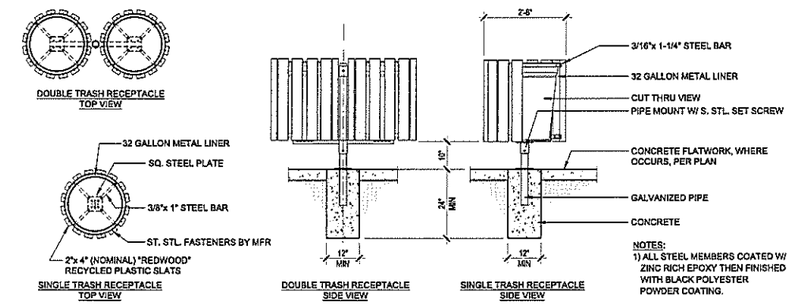


NOTES:
1) ALL STEEL MEMBERS COATED W/ ZINC RICH EPOXY THEN FINISHED WITH BLACK POLYESTER POWDER COATING.

## 14 TRASH RECEPTACLE

1/2" = 1'-0" 10-400-A

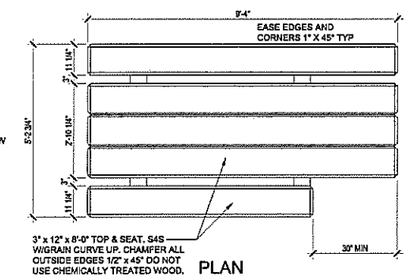


LEAVE ALL REDWOOD MEMBERS NATURAL

## 6 ACCESSIBLE PICNIC TABLE

1/2" = 1'-0" 10-402

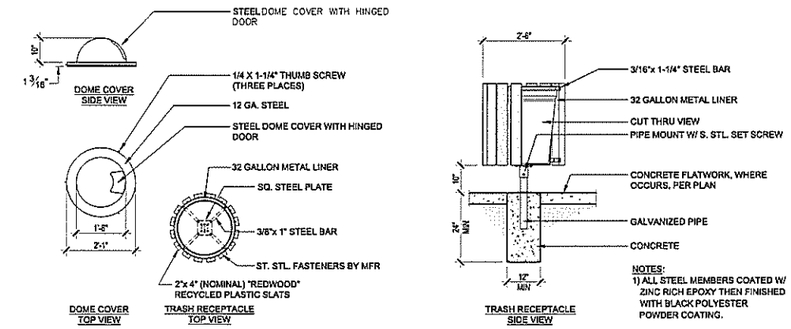


NOTES:
1) ALL STEEL MEMBERS COATED W/ ZINC RICH EPOXY THEN FINISHED WITH BLACK POLYESTER POWDER COATING.

## 15 TRASH RECEPTACLE

1/2" = 1'-0" 10-400

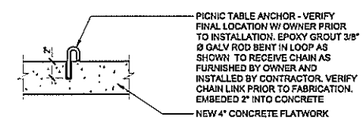


## 7 PICNIC TABLE ANCHOR

1-1/2" = 1'-0" 02-201-C

## DRINKING FOUNTAIN NOTES

1. BASIS OF DESIGN: MOST DEPENDABLE FOUNTAINS 5705 COMMANDER DR. P.O. BOX 587 ARLINGTON, TN 38002-0587 1-800-552-6331 PHONE: (901) 867-0039 FAX: (901) 867-0159 www.mostdependable.com OR APPROVED EQUAL
2. THE DRINKING FOUNTAIN SPECIFIED OR APPROVED EQUIVALENT SHALL BE REPRESENTED IN WRITING IN A SUBMITTAL PROVIDED BY MANUFACTURER AND CONTRACTOR AS BEING A HIGHLY DURABLE DRINKING FOUNTAIN, IN FULL COMPLIANCE WITH STATE AND FEDERAL ACCESSIBILITY STANDARDS, SUITABLE FOR INSTALLATION WITHIN THE MARINE ENVIRONMENT WITH ALL ASSOCIATED CONDITIONS AND INTENDED PUBLIC USES AT THE SITE OF THE WORK.
3. PEDESTAL SURFACE MOUNTED FOUNTAIN SHALL BE EQUIPPED WITH TWO (2) ACCESSIBLE TROUGH STYLE ARMS (ONE LOW AND ONE HIGH) DESIGNED FOR INTERNAL DRAINAGE INTO PEA GRAVEL (AS SHOWN IN THE DETAIL). BOTH THE HIGH AND THE LOW ARMS AND OPERATING CONTROLS SHALL MEET OR EXCEED STATE AND FEDERAL ACCESSIBILITY STANDARDS. PROVIDE WITH STAINLESS STEEL CARRIER BASE.
4. FINISH: STAINLESS STEEL SUITABLE FOR A HIGHLY DURABLE INSTALLATION WITHIN THE MARINE ENVIRONMENT AT THE SITE OF THE WORK.
5. ARMS AND BODY: ONE PIECE WELD CONSTRUCTION WITH 304 SCHEDULE 10 STAINLESS STEEL. HEAVY-DUTY, STAINLESS STEEL ANTI-SQUIRT HEAD MOUNTED WITH LOCK NUT AND WASHER TO PREVENT TAMPERING.
6. BUBBLER HEAD: DESIGNED TO DELIVER A CONSTANT STREAM TRAJECTORY AND SHIELDED TO PREVENT CONTAMINATION.
7. PUSH BAR: 304 STAINLESS STEEL WITH 1-1/4" X 2" STAINLESS STEEL HOUSING. PUSH BAR SHALL OVERLAP HOUSING AND INTERNALLY OPERABLE COMPONENTS AND OPENINGS SHALL BE SEALED WITH GASKETS OR OTHER APPROPRIATE MEASURES TO PREVENT SAND AND OTHER OBJECTS FROM IMPEDING OR OBSTRUCTING FULL AND CONTINUOUS OPERATION. CONTROL VALVE: NON-CARTRIDGE STAINLESS STEEL O-RING VALVE DELIVERS NON-SPURT, ADJUSTABLE STEADY STREAM OF WATER. WASHERLESS. FORCE TO ACTIVATE 4 LBS MAX.
8. WORKING PARTS SHALL BE ACCESSIBLE THROUGH A TAMPER / VANDAL PROOF REMOVABLE FACE PLATE.
9. WATER SUPPLY: MAINTENANCE-FREE REINFORCED NYLOBRAID TUBING AND FITTINGS, NSF-61 CERTIFIED. TUBING SHALL NOT BE PLASTIC MATERIAL. SUPPLY WITH A 1/2" MIP THREADED INLET WITH A STAINLESS STEEL STRAINER. PROVIDE MANUFACTURER SUPPLIED UNION FITTINGS AT EVERY CONNECTION. SUPPLY CONNECTION SHALL BE ACCESSIBLE THROUGH THE UNIT AND LOCATED ABOVE FINISHED GRADE.
10. FOUNTAIN SHALL MEET NSF-61 REQUIREMENTS AND HAVE A UL APPROVED LABEL WITH A UL TRACKING NUMBER.
11. WASTE DRAIN: DESIGNED TO DRAIN INTERNALLY FROM THE STAINLESS STEEL TROUGH DOWN THE INSIDE OF THE FOUNTAIN. COORDINATE DRAIN TO DAYLIGHT WITHOUT DRAIN LINES BECOMING OBSTRUCTED BY SAND. PROVIDE WITH SUBMITTAL TO OWNER FOR OWNER'S APPROVAL. ALL MFR. RECOMMENDED INSTALLATION INSTRUCTIONS FOR THE UNIT INCLUDING DESIGN THAT FULLY ADDRESSES DRAIN LINE PERFORMANCE SUCH THAT IT WILL REMAIN FREE FLOWING AND NOT BECOME OBSTRUCTED BY SAND. NOTE: THIS UNIT IS TO BE INSTALLED IN A BEACH ENVIRONMENT - INSTALLATION SHALL BE ACCOMPLISHED TO PREVENT CLOGGING.
12. PROVIDE UNIT SHUT OFF WATER VALVE IN PRE-CAST CONCRETE VALVE BOX LOCATED WITHIN CONCRETE PAD PER PLAN. PROVIDE DRAIN DOWN VALVE AND DISCHARGE TO UNIT DRAIN BASIN.

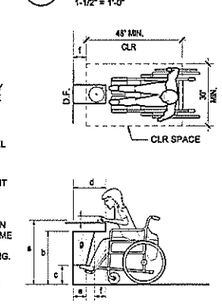


NOTES:
1. NO SHARP OR COARSE SURFACES. ALL SURFACES SHALL BE FINISHED SMOOTH.
2. 18" MINIMUM DEPTH AT FOUNTAIN.
3. CLEAR UNOBSTRUCTED KNEE SPACE 27"x8" DP UNDER FOUNTAIN AS MEASURED FROM FRONT EDGE.
4. TOE CLEARANCE OF 9" H x 17" DP
5. ACCESSIBLE LEVER OR PUSH BAR LOCATED 6" MAX FROM FRONT EDGE.
6. BUBBLER LOCATED 6" MAX FROM FRONT EDGE.
7. BUBBLER OUTLET LOCATED 36" MAX FROM FLOOR OR FINISHED GRADE BELOW.
8. SPOUT ON OVAL OR ROUND BOWL SHALL BE WITHIN 3" OF FRONT EDGE OF FOUNTAIN.
9. STREAM SHALL BE SUBSTANTIALLY PARALLEL TO FRONT EDGE AND 4" MIN HIGH.

### REQUIRED KNEE SPACE

| | |
|---|---|
| a | = 36" MAX. |
| b | = 27" MIN CLEAR |
| c | = 8" MIN |
| d | = DEPTH OF FOUNTAIN (18"MIN) |
| e | = 6" MAX |
| f | = 6" MIN |
| g | = ENCROACHMENT ZONE |

SEE CBC SECTIONS 1117B.1.2 - 1117B.1.5; ADAS SECTIONS 211, 305, 307, 309, 602

## 8 ACCESSIBLE DRINKING FOUNTAINS

NO SCALE 06-041-A

## DRINKING FOUNTAIN REQUIREMENTS

***11B-211 Drinking fountains***

***11B-211.1 General.*** Where drinking fountains are provided on an exterior site, on a floor, or within a secured area they shall be provided in accordance with *Section 11B-211*.

***11B-211.2 Minimum number.*** No fewer than two drinking fountains shall be provided. *When provided,* one drinking fountain shall comply with *Sections 11B-602.1* through *11B-602.6, 11B-602.8* and *11B-602.9* and one drinking fountain shall comply with *Sections 11B-602.7 and 11B-602.9.*

***11B-602 Drinking fountains***

***11B-602.1 General.*** Drinking fountains shall comply with *Sections 11B-307* and *11B-602.*

***11B-602.2 Clear floor space.*** Units shall have a clear floor or ground space complying with *Section 11B-305* positioned for a forward approach and centered on the unit. Knee and toe clearance complying with *Section 11B-306* shall be provided.

**Exception:** A parallel approach complying with *Section 11B-305* shall be permitted at units for children's use where the spout is 30 inches (762 mm) maximum above the finish floor or ground and is 3½ inches (89 mm) maximum from the front edge of the unit, including bumpers.

***11B-602.3 Operable parts.*** Operable parts shall comply with *Section 11B-309. The flow of water shall be activated by a manually operated system that is front mounted or side mounted and located within 5 inches (152 mm) of the front edge of the fountain or an automatic electronically controlled device.*

***11B-602.4 Spout height.*** Spout outlets shall be 35 inches (914 mm) maximum above the finish floor or ground.

***11B-602.5 Spout location.*** The spout shall be located 15 inches (381 mm) minimum from the vertical support and 5 inches (127 mm) maximum from the front edge of the unit, including bumpers.

**Figure *11B-602.5***
**Drinking Fountain Spout Location**

***11B-602.6 Water flow.*** The spout shall provide a flow of water 4 inches (102 mm) high minimum and shall be located 5 inches (127 mm) maximum from the front of the unit. The angle of the water stream shall be measured horizontally relative to the front face of the unit. Where spouts are located less than 3 inches (76 mm) of the front of the unit, the angle of the water stream shall be 30 degrees maximum. Where spouts are located between 3 inches (76 mm) and 5 inches (127 mm) maximum from the front of the unit, the angle of the water stream shall be 15 degrees maximum.

***11B-602.7 Drinking fountains for standing persons.*** Spout outlets of drinking fountains for standing persons shall be 38 inches (965 mm) minimum and 43 inches (1092 mm) maximum above the finish floor or ground.

***11B-602.8 Depth.*** *Wall- and post-mounted cantilevered drinking fountains shall be 18 inches (457 mm) minimum and 19 inches (483 mm) maximum in depth.*

***11B-602.9 Pedestrian protection.*** *All drinking fountains shall either be located completely within alcoves, positioned completely between wing walls, or otherwise positioned so as not to encroach into pedestrian ways. The protected area within which a drinking fountain is located shall be 32 inches (813 mm) wide minimum and 18 inches (457 mm) deep minimum, and shall comply with Section 11B-305.7. When used, wing walls or barriers shall project horizontally at least as far as the drinking fountain and to within 6 inches (152 mm) vertically from the floor or ground surface.*

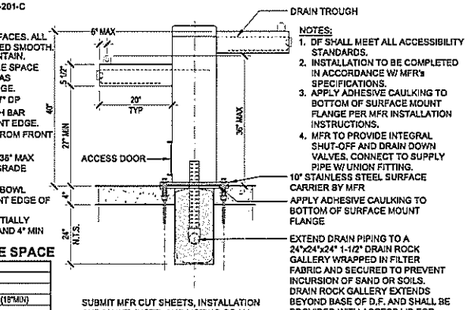


NOTES:
1. DF SHALL MEET ALL ACCESSIBILITY STANDARDS.
2. INSTALLATION TO BE COMPLETED IN ACCORDANCE W/ MFR's SPECIFICATIONS.
3. APPLY ADHESIVE CAULKING TO BOTTOM OF SURFACE MOUNT FLANGE PER MFR INSTALLATION INSTRUCTIONS.
4. MFR TO PROVIDE INTEGRAL SHUT-OFF AND DRAIN DOWN VALVES. CONNECT TO SUPPLY PIPE W/ UNION FITTING.

SUBMIT MFR CUT SHEETS, INSTALLATION AND MAINT. INSTR. AND LISTING OF ALL PARTS INCL. UL LISTING FOR OWNER'S APPROVAL.

MOST DEPENDABLE FOUNTAINS - MODEL 840 SMSS-01: PEA GRAVEL INSTALLATION

## 4 DRINKING FOUNTAIN

NO SCALE 15-007


Craig D. Williams
Architecture
Interiors
Planning
Project
Management

295 Neva Street
Sebastopol, CA
95472

(707) 823-2724
CASpAccess@gmail.com



COPYRIGHT AND CONDITIONAL RIGHT OF USE
Drawings, specifications and all ideas, designs, and arrangements indicated on these drawings and specifications are and shall remain the property of Craig Williams, architect and are intended to be used in connection with this specific project only. No part shall be copied or disclosed to others or otherwise be used in connection with any other work or project other than the specified scope of work for which they have been prepared without the prior written consent of the architect. There shall be no changes or deviations from these drawings or the accompanying specifications without the prior written consent of the Architect - the design professional in responsible charge.

THESE DRAWINGS ARE INSTRUMENTS OF SERVICE THE PROPERTY OF CRAIG D. WILLIAMS, ARCHITECT, COPYRIGHT © 2015-2016

Visual contact with these plans and specifications shall constitute conclusive evidence of acceptance of these restrictions.


CRAIG D. WILLIAMS

LICENSED ARCHITECT
CRAIG DOUGLAS WILLIAMS
No. C026642
REN. 10-31-17
STATE OF CALIFORNIA

08.30.2016

NOT FOR CONSTRUCTION UNLESS SIGNED BY THE ARCHITECT AND STAMPED APPROVED BY THE AUTHORITY HAVING JURISDICTION

AGENCY APPROVALS

ACCESSIBILITY UPGRADES
IVES POOL
AND POOL HOUSE
7400 WILLOW STREET
SEBASTOPOL, CA

PROJECT NUMBER: 082515.00
DATE: 30 AUGUST, 2016
DRAWN BY: CW
CHECKED BY: CW
REVISIONS:

MISCELLANEOUS DETAILS

**A3.10**


© THESE DRAWINGS ARE INSTRUMENTS OF SERVICE AND ARE THE SOLE PROPERTY OF CRAIG WILLIAMS ARCHITECT. ANY USE WITHOUT WRITTEN CONSENT IS PROHIBITED.



Aug 31, 2016 - 7:33am cwilliams C:\Documents and Settings\cwilliams\Desktop\CLIENTS\SEBASTOPOL CITY\IVES\CD-A3.10.dwg

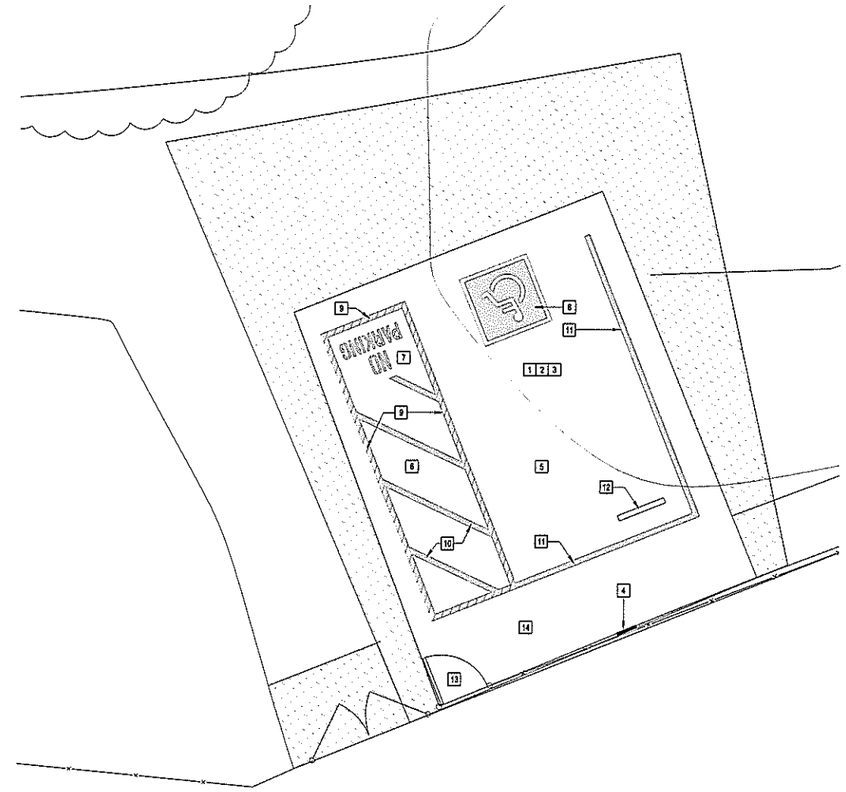


ADD ALTERNATE
## 3 PARTIAL SITE PLAN
1" = 4'-0" SEE DETAIL COMMON NOTES AND DETECTABLE WARNING NOTES THIS SHEET

## PLAN LEGEND

- ELEMENT OR ITEM TO BE REMOVED
- APPROXIMATE BOUNDARY AND AREA WITHIN WHICH AN ELEMENT IS TO BE REMOVED
- LEVEL AREA. 2.0% MAXIMUM SLOPE IN ANY DIRECTION. SURFACE TO DRAIN WATER TOWARDS (E) DRAINAGE WAYS / DRAINAGE STRUCTURES. STANDING WATER NOT ALLOWED. GRIND / OVERLAY SURFACES TO EXTENT NECESSARY TO COMPLY.
- (N) CONCRETE FLATWORK. FOR CONCRETE SUBJECT TO VEHICULAR LOADS SEE DETAIL .
- APPROXIMATE AC GRIND / OVERLAY TO PROVIDE MAX 1:48 SLOPE IN ANY DIRECTION. V.I.F.
- LANDSCAPED AREA
- PAVEMENT MARKING STRIPE - WHITE .
- PAVEMENT MARKING STRIPE - FED BLUE .

## SHEET KEY NOTES ADD ALTERNATE

1. SAWCUT NEATLY AT EDGES OF AC PAVEMENT TO REMAIN. REMOVE AC PAVEMENT COMPLETE IN AREA INDICATED. WHERE (N) AC FLATWORK IS SHOWN AND INDICATED PREPARE (E) GRAVEL BASE TO RECEIVE (N) WORK PER PLAN. MAKE ALL ADJUSTMENTS AS NECESSARY TO RECEIVE (N) WORK IN ACCORDANCE WITH THESE DESIGN DOCUMENTS AND REFERENCED STANDARDS. EXCAVATE AND RE-GRADE TO A DEPTH READY TO RECEIVE (N) WORK. SEE DETAILS AS APPLY FOR AC PAVING SECTION, TACK COAT EDGES, TAPER SLOPES AS NOTED AND IN COMPLIANCE WITH APPLICABLE STANDARDS. PREP PARKING LOT FOR SLURRY SEAL. VERIFY SCOPE OF AC REPAIRS AND SLURRY SEAL COAT WITH OWNER.
2. PREPARE PARKINGSPACE WITHIN WORK AREA FOR NEW WORK. REMOVE DETERIORATED AC PAVEMENT AT LOCATIONS AND TO THE EXTENT IDENTIFIED BY OWNER. PATCH / OVERLAY AC PAVEMENT. SEE SHEET T04 PAVEMENT NOTES.
3. AC PAVEMENT OVERLAY AT PROPOSED ACCESSIBLE PARKING SPACES AND ACCESSIBLE AISLES. ASPHALT CONCRETE OVERLAY TAPER SHALL OCCUR ENTIRELY OUTSIDE ANY AREA DESIGNATED FOR ACCESSIBLE PARKING AND ACCESS AISLE TAPERS TO CONFORM FLUSH TO (E) AC PAVEMENT TO REMAIN. MAXIMUM SLOPE AT TAPER 8%. MAX DESIGN SLOPE AT PARKING AND ACCESS AISLE 1.5% (MAX PER CODE = 2.083%). SEE DETAIL 4 THIS SHEET. SEE ALSO DETAILS AND PAVEMENT NOTES SHEET A3.1. SEE AC PAVEMENT NOTES SHEET T0.4.
4. NEW SIGN AND SIGN POST PER SITE PLAN AND SIGN LEGEND SHEET A1.0. REMOVE VEGETATION, ORGANIC MATTER AND TOPSOIL. EXCAVATE TO A DEPTH READY TO RECEIVE (N) POST FOOTING. SEE DETAIL 8/A3.0 AS APPLY FOR SIGN FOOTINGS.
5. (N) VAN ACCESSIBLE PARKING STALL. 2% MAXIMUM SLOPE IN ANY DIRECTION. GRIND AND / OR PROVIDE AC OVERLAY TO ACHIEVE COMPLIANT SLOPE CONDITIONS. NO ABRUPT CHANGES IN ELEVATION EXCEEDING 1/4" VERTICAL. ANY CHANGE IN ELEVATION BETWEEN 1/4" AND 1/2" SHALL HAVE THE TOP 1/4" BEVELED NO STEEPER THAN 2h:1v. ABRUPT CHANGES IN LEVEL GREATER THAN 1/2" ARE PERMISSIBLE GRIND SMOOTH AS NECESSARY ANY SUCH EXISTING CONDITIONS. PROVIDE NEW STRIPING AND (N) PAVEMENT MARKINGS AS INDICATED. SEE ALSO GENERAL ACCESSIBLE PARKING NOTES SHEET A3.2. AND DETAIL 14/A3.0.
6. (N) ACCESS AISLE. 2% MAXIMUM SLOPE IN ANY DIRECTION. GRIND AND / OR PROVIDE AC OVERLAY TO ACHIEVE COMPLIANT SLOPE CONDITIONS. NO ABRUPT CHANGES IN ELEVATION EXCEEDING 1/4" VERTICAL. ANY CHANGE IN ELEVATION BETWEEN 1/4" AND 1/2" SHALL HAVE THE TOP 1/4" BEVELED NO STEEPER THAN 2h:1v. ABRUPT CHANGES IN LEVEL GREATER THAN 1/2" ARE PERMISSIBLE GRIND SMOOTH AS NECESSARY ANY SUCH EXISTING CONDITIONS. APPLY SLURRY SEAL TO THE FULL AREAS INDICATED FOR (N) DESIGNATED ACCESSIBLE PARKING SPACES AND THEIR ASSOCIATED ACCESS AISLES. PROVIDE NEW STRIPING AND (N) PAVEMENT MARKINGS AS INDICATED. ACCESS AISLE PERIMETER STRIPING 4" WIDE - FEDERAL BLUE / DIAGONAL STRIPES 4" WIDE AT 36" oc - WHITE. SEE ALSO GENERAL ACCESSIBLE PARKING NOTES SHEET A3.2. AND DETAIL 14/A3.0. SEE PAVEMENT MARKING NOTES SHEET T0.6.
7. (N) PAVEMENT MARKING: PREP SURFACES AND PAINT "NO PARKING" 12" HIGH WHITE LETTERS. PAINT WITH PREMIUM QUALITY HEAVY DUTY RATED TRAFFIC PAINT - USE WHITE PAINT APPLIED AT THE MINIMUM RATE OF TWO COATS OF PAINT WITH SUFFICIENT TIME TO ALLOW FULL DRYING / CURING BETWEEN COATS PER MFR. INSTALLATION INSTRUCTIONS. SEE ALSO GENERAL ACCESSIBLE PARKING NOTES SHEET A3.2. AND DETAIL 14/A3.0. SEE PAVEMENT MARKING NOTES SHEET T0.6.
8. (N) PAVEMENT MARKING: PREP SURFACES AND PAINT ISA SYMBOL. PAINT WITH PREMIUM QUALITY HEAVY DUTY RATED TRAFFIC PAINT - USE WHITE AND DARK FEDERAL STANDARD 595, BLUE No. 15180 PAINT APPLIED AT THE MINIMUM RATE OF TWO COATS OF PAINT WITH SUFFICIENT TIME TO ALLOW FULL DRYING / CURING BETWEEN COATS PER MFR. INSTALLATION INSTRUCTIONS. SEE ALSO GENERAL ACCESSIBLE PARKING NOTES SHEET A3.2. AND DETAIL 14/A3.0. SEE PAVEMENT MARKING NOTES SHEET T0.6.
9. (N) PAVEMENT MARKING: PREP SURFACES AND PAINT PERIMETER STRIPES IMMEDIATELY ADJACENT TO DESIGNATED ACCESSIBLE PASSENGER ACCESS AISLE. PAINT WITH PREMIUM QUALITY HEAVY DUTY RATED TRAFFIC PAINT - DARK FEDERAL STANDARD 595, BLUE No. 15180. USE A MINIMUM OF TWO COATS OF PAINT WITH SUFFICIENT TIME TO ALLOW FULL DRYING / CURING BETWEEN COATS PER MFR. INSTALLATION INSTRUCTIONS. SEE ALSO GENERAL ACCESSIBLE PARKING NOTES SHEET A3.2. AND DETAIL 14/A3.0. SEE PAVEMENT MARKING NOTES SHEET T0.6.
10. (N) PAVEMENT MARKING: PREP SURFACES AND PAINT 4 INCH WIDE 45° DIAGONAL STRIPES AT 3 FEET MAXIMUM ON CENTER WITHIN DESIGNATED ACCESSIBLE PASSENGER AISLE. PAINT WITH PREMIUM QUALITY HEAVY DUTY RATED TRAFFIC PAINT - USE WHITE PAINT APPLIED AT THE MINIMUM RATE OF TWO COATS OF PAINT WITH SUFFICIENT TIME TO ALLOW FULL DRYING / CURING BETWEEN COATS PER MFR. INSTALLATION INSTRUCTIONS. SEE ALSO GENERAL ACCESSIBLE PARKING NOTES SHEET A3.2. AND DETAIL 14/A3.0. SEE PAVEMENT MARKING NOTES SHEET T0.6.
11. (N) PAVEMENT MARKING: PREP SURFACES AND PAINT 4 INCH WIDE STRIPES WHERE SHOWN AT DESIGNATED PARKING SPACES. PAINT WITH PREMIUM QUALITY HEAVY DUTY RATED TRAFFIC PAINT - USE WHITE PAINT APPLIED AT THE MINIMUM RATE OF TWO COATS OF PAINT WITH SUFFICIENT TIME TO ALLOW FULL DRYING / CURING BETWEEN COATS PER MFR. INSTALLATION INSTRUCTIONS. SEE ALSO GENERAL ACCESSIBLE PARKING NOTES SHEET A3.2. AND DETAIL 14/A3.0. SEE PAVEMENT MARKING NOTES SHEET T0.6.
12. (N) CONCRETE WHEEL STOP. SEE DETAIL 12/A3.0 AND WHEEL STOP NOTES SHEET T0.6.
13. (N) ACCESSIBLE CHAIN LINK GATE. PROVIDE LEVEL LANDING. SEE DETAILS 19/A3.0 AND DETAIL 19 THIS SHEET.
14. (N) ACCESSIBLE P.O.T. 4" MIN THK. (2" MIN OVERLAY) AC PAVED WALK . WIDTH AS DETAILED. AT LOCATIONS WHERE (E) WALKS AND DOOR / GATE LANDINGS ARE TO BE EXTENDED OR WIDENED CONFORM FLUSH TO (E) WALK SURFACE TO REMAIN. EXTEND AS SHOWN FROM (E) EDGE OF AC PAVED PARKING AREA TO REMAIN TO EDGE OF (E) PAVED WALKS. MAXIMUM ALLOWED RUNNING SLOPE (SLOPE IN DIRECTION OF TRAVEL) IS 5.0% (4.5% MAX TO ALLOW FOR CONSTRUCTION TOLERANCE). USE MINIMUM RUNNING SLOPE PRACTICABLE. MAXIMUM ALLOWED CROSS SLOPE IS 2.0% (CONSTRUCT USING 1.5% MAX TO ALLOW FOR CONSTRUCTION TOLERANCE). WHERE WALK CHANGES DIRECTION AND AT INTERSECTIONS (HATCHED AREAS) SLOPE SHALL BE LIMITED TO 1.5% MAX IN ANY DIRECTION. SLOPE TO DRAIN WATER AWAY FROM WALKS AND TOWARDS NATURAL DRAINAGE / STORMWATER FEATURES. PONDING OF WATER IS NOT PERMISSIBLEXTEND PAVEMENT AS NECESSARY (TRANSITIONAL SEGMENTS) WITH MINIMUM WARPING TO CONFORM TO (E) ADJACENT PAVEMENT TO REMAIN. WARPED TRANSITIONAL SEGMENTS SHALL OCCUR OUTIDE OF THE MINIMUM WIDTH REQUIRED FOR ANY WALK. CONFORM ABUTTING EDGES FLUSH TO (E) PAVED SURFACES TO REMAIN WITH A MINIMUM OF WARPING OF PLANE WHILE REMAINING WITHIN MAXIMUM CROSS AND RUNNING SLOPES. AT EXPOSED PAVED SURFACES PROVIDE NEAT AND UNIFORM SLIP AND SKID RESISTANT SURFACE FINISH TREATMENT (0.8 MIN WET COEFF. OF FRICTION). SEE PATH OF TRAVEL NOTES SHEET A1.0. SEE ALSO PATH OF TRAVEL DETAILS AND ACCESSIBILITY NOTES SHEET T0-4. SEE DETAILS 15/A3.0 AND 16/A3.0 FOR AC PAVEMENT AND DETAIL 5/A3.1 FOR CONC. PVMET. SEE ALSO PAVEMENT NOTES SHEET A3.1. SEE AC / CONCRETE PAVEMENT SPECIFICATIONS SHEETS T0-4 AND T0-5.

NOTE: APPROVAL OF THESE PLANS BY JURISDICITIONAL AJENCY REPRESENTS ACKNOWLEGEMENT BY THE AHJ THAT THE ON-SITE AREAS AT THIS LOCATION REPRESENT CONDITIONS THAT DO NOT EXCEED HAZARDS TO PEDESTRIANS GREATER THAN THE HAZARDS PRESENT AT LOCATIONS WHERE SIDEWALKS IN THE PUBLIC RIGHT-OF-WAY CROSS OR ADJOIN VEHICULAR AREAS. AS SUCH AHJ ACKNOWLEGES THAT VEHICULAR AREAS PRESENT AT THIS SITE ARE NOT HAZARDOUS WITHIN THE MEANING OF THE CALIFORNIA BUILDING CODE SECTION 118-247.1.2.5.

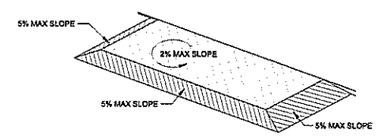


GRIND AND, AS NECESSARY APPLY (N) AC PAVEMENT OVERLAY IN AREA INDICATED TO RESULT IN 2% MAXIMUM SLOPE IN ANY DIRECTION IN THE ENTIRE AREA DESIGNATED FOR ACCESSIBLE PARKING AND ACCESS AISLE. SEE DETAILS 8, 10 AND 14 SHEET A3.1 AND SHEET T.04 FOR ADDITIONAL REQUIREMENTS. CONFORM EDGES FLUSH AND SMOOTH TO ADJOINING SURFACES TO REMAIN. WARPS REQUIRED SHALL OCCUR OUTSIDE OF AREAS REQUIRED TO MEET ACCESSIBILITY STANDARDS. NOTE: STORM WATER FLOW LINES DIRECT WATER TOWARDS (E) FLOW LINES TO REMAIN AND AND INTO (E) STORM WATER FACILITIES. VERIFY CONDITIONS IN FIELD AND MAKE ALL NECESSARY ADJUSTMENTS.

PAVING CONTRACTOR TO VERIFY EXTENT AND CONFIGURATION OF AC SURFACE TREATMENT TO ACHIEVE NO MORE THAN 2% SLOPE IN ANY DIRECTION WITHIN ACCESSIBLE PARKING AND ACCESS AISLE AREA. VERIFY STORM/WATER FLOW LINES FOR SUFFICIENT FALL, DRAINAGE STRUCTURE INLETS, AND ADJUST FIELD CONDITIONS TO PREVENT STANDING WATER AND BUILD UP OF DEBRIS / SEDIMENT.

## 4 AC PAVEMENT OVERLAY
PARKING - NOT TO SCALE

## CAUTION

THESE ARCHIVE PLANS, OBTAINED FROM THE OWNER, MAY NOT ACCURATELY REFLECT ACTUAL AS-BUILT CONDITIONS IN EACH AREA WITHIN THE SCOPE OF WORK DEFINED AND DESCRIBED IN THIS PROJECT. PRIOR TO SUBMITTING BID CONTRACTOR SHALL FIELD INSPECT AND VERIFY INFORMATION PROVIDED. CONTRACTOR SHALL BRING ANY DISCREPANCIES BETWEEN THE ARCHIVE INFORMATION, THESE PLANS AND PROPOSED WORK AFFECTING THE PROJECT WORK TO THE ATTENTION OF THE ARCHITECT IN WRITING. SUBMITTING BID INDICATES CONTRACTOR ACCEPTS THESE CONSTRUCTION DOCUMENTS AS SUFFICIENTLY ACCURATE AND COMPLETE TO CARRY OUT THE WORK IN CONFORMANCE WITH THE DESIGN INTENT OF THESE PLANS AND BUILDING CODE REQUIREMENTS.

NOTE: THE ARE STRUCTURAL MEMBERS AND STRUCTURAL SYSTEMS PRESENT AT THE SITE OF THE WORK. IT IS NOT INTENDED FOR ANY STRUCTURAL SYSTEM OR BEARING / SHEAR MEMBER OR ASSEMBLYTO BE MODIFIED AS PART OF THE WORK. EXISTING WATER AND GAS PIPING, SEWER, VENTING, DUCTS, CONDUIT, ELECTRICAL CIRCUITS, DATA - TELEPHONE - SIGNAL, FIRE ALARM, AND OTHER SUCH INFRASTRUCTURE / UTILITIES IS LIKELY PRESENT. THE LOCATIONS, SIZES AND/OR EXTENT OF SUCH ITEMS IS NOT NECESSARILY NOTED OR SHOWN IN THESE CONSTRUCTION DOCUMENTS. IF AND WHERE ANY SUCH ITEMS ARE INDICATED IN THESE PLANS, SUCH INFORMATION HAS BEEN OBTAINED FROM SOURCES OF VARYING RELIABILITY. THE CONTRACTOR IS CAUTIONED TO REVIEW ALL ARCHIVE DOCUMENTS AND FIELD VERIFY THE TYPES, EXTENT, SIZES, LOCATIONS AND DEPTHS OF SUCH LEMENTS AND UTILITIES IN THE AREA WITHIN THE VICINITY OF THE SCOPE WORK AND ITS ENVIRONS SO AS NOT TO ADVERSELY IMPACT OR DAMAGE SAME.

FOR ANY EXCAVATION WORK CONTRACTOR SHALL FIELD VERIFY LOCATION AND DEPTH PRIOR TO ANY EXCAVATION OR IMPROVEMENT. CALL 811 DIG ALERT MIN 48 HRS PRIOR TO EXCAVATING. CONTRACTOR SHALL IN ADVANCE OF COMMENCING ANY EXCAVATION OBTAIN A DIG ALERT TICKET FOR ANY EXCAVATION, IF ANY, ASSOCIATED WITH THIS PROJECT.

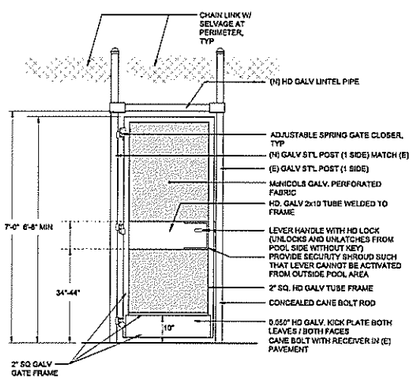


ADD ALTERNATE
## 19 GATE DETAIL
PROVIDE SHOP DRAWING
1/2" = 1'-0" 05-600-B

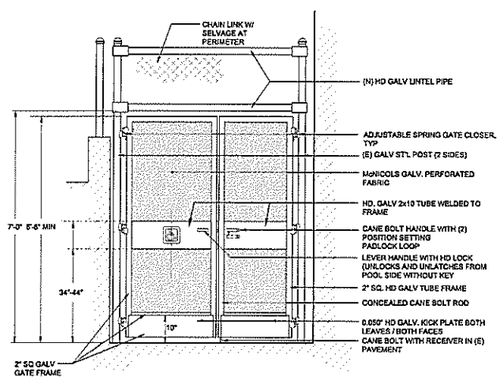


## 20 GATE DETAIL
PROVIDE SHOP DRAWING
1/2" = 1'-0" 05-600-A


Craig D. Williams
Architecture
Interiors
Planning
Project
Management

295 Neva Street
Sebastopol, CA
95472

(707) 823-2724
CASpAccess@gmail.com



COPYRIGHT AND CONDITIONAL RIGHT OF USE

Drawings, specifications and all ideas, designs, and arrangements indicated on these drawings and specifications are and shall remain the property of Craig Williams, architect and are intended to be used in connection with this specific project only. No part shall be copied or disclosed to others or otherwise be used in connection with any other work or project other than the specified scope of work for which they have been prepared without the prior written consent of the architect. There shall be no changes or deviations from these drawings or the accompanying specifications without the prior written consent of the Architect - the design professional in responsible charge.

THESE DRAWINGS ARE INSTRUMENTS OF SERVICE THE PROPERTY OF CRAIG D. WILLIAMS, ARCHITECT, COPYRIGHT © 2015-2018

Visual contact with these plans and specifications shall constitute conclusive evidence of acceptance of these restrictions.


CRAIG D. WILLIAMS
LICENSED ARCHITECT
CRAIG DOUGLAS WILLIAMS
No. C026642
REN. 10-31-17
STATE OF CALIFORNIA
08.30.2016

NOT FOR CONSTRUCTION UNLESS SIGNED BY THE ARCHITECT AND STAMPED APPROVED BY THE AUTHORITY HAVING JURISDICTION

AGENCY APPROVALS

ACCESSIBILITY UPGRADES
IVES POOL
AND POOL HOUSE
7400 WILLOW STREET
SEBASTOPOL, CA

PROJECT NUMBER:
082515.00
DATE:
30 AUGUST, 2016
DRAWN BY:
CHECKED BY:
CW
REVISIONS:

DETAILS
**A3.11**


© THESE DRAWINGS ARE INSTRUMENTS OF SERVICE AND ARE THE SOLE PROPERTY OF CRAIG WILLIAMS ARCHITECT. ANY USE WITHOUT WRITTEN CONSENT IS PROHIBITED.



Aug 31, 2016 - 7:26am cwilliams C:\Documents and Settings\cwilliams\Desktop\CLIENTS\SEBASTOPOL CITY\VESICD-A3.11.dwg

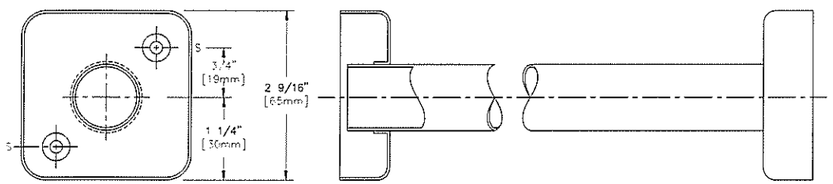


B-6107
1" Diameter Shower Curtain Rod
Square End Flange

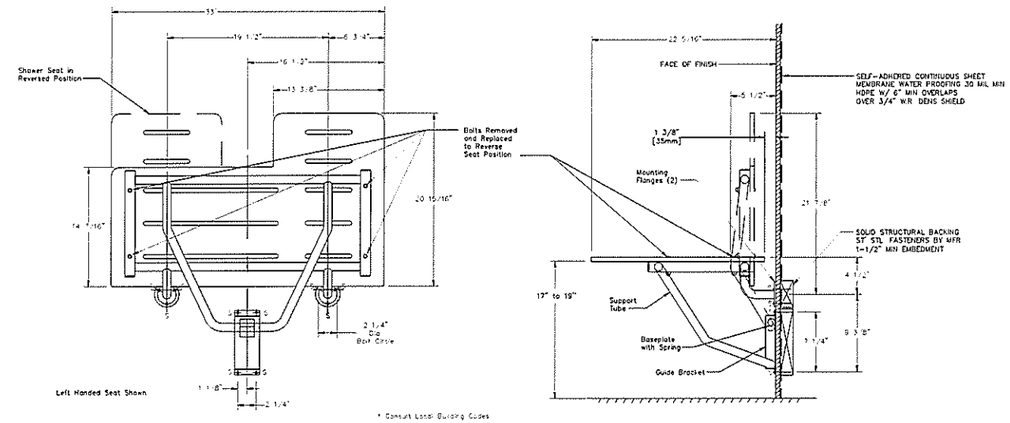


B-5181.DWG
REVERSIBLE SOLID PHENOLIC
FOLDING SHOWER SEAT
CBC 11B- 608.4

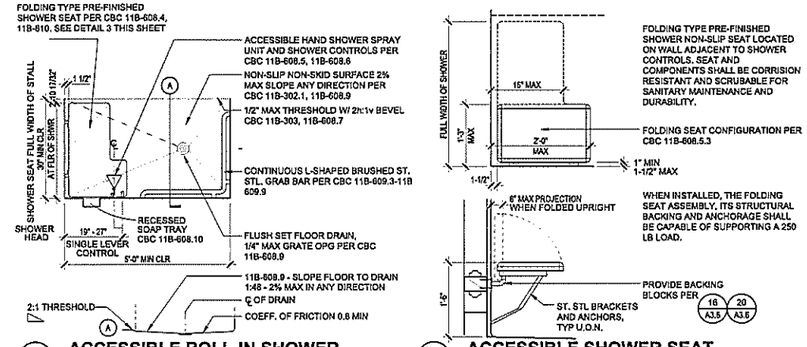


FOLDING TYPE PRE-FINISHED SHOWER NON-SLIP SEAT LOCATED ON WALL ADJACENT TO SHOWER CONTROLS. SEAT AND COMPONENTS SHALL BE CORRISION RESISTANT AND SCRUBABLE FOR SANITARY MAINTENANCE AND DURABILITY.

FOLDING SEAT CONFIGURATION PER CBC 11B-608.5.3

WHEN INSTALLED, THE FOLDING SEAT ASSEMBLY, ITS STRUCTURAL BACKING AND ANCHORAGE SHALL BE CAPABLE OF SUPPORTING A 250 LB LOAD.

7 **ACCESSIBLE ROLL-IN SHOWER**
1/2" = 1'-0" ACCESSIBLE SHOWER COMPARTMENT PER CBC 11B-608.1 01-012-A

3 **ACCESSIBLE SHOWER SEAT**
3/4" = 1'-0" 01-014-A

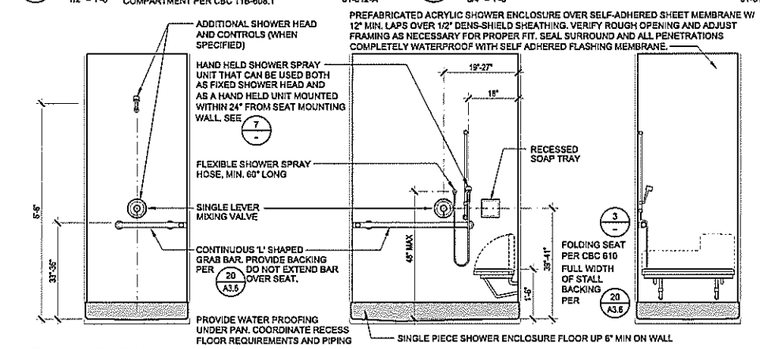


8 **ACCESSIBLE SHOWER STALL**
1/2" = 1'-0" 01-013

SEE SHEETS A2.1 FOR CONFIGURATION AND A3.9 - CODE REQUIREMENTS SHALL PREVAIL


Craig D. Williams
Architecture
Interiors
Planning
Project
Management

295 Nava Street
Sebastopol, CA
95472

(707) 823-2724
CASpAccess@gmail.com



COPYRIGHT AND CONDITIONAL RIGHT OF USE

Drawings, specifications and all ideas, designs, and arrangements indicated on these drawings and specifications are and shall remain the property of Craig Williams, architect and are intended to be used in connection with this specific project only. No part shall be copied or disclosed to others or otherwise be used in connection with any other work or project other than the specified scope of work for which they have been prepared without the prior written consent of the architect. There shall be no changes or deviations from these drawings or the accompanying specifications without the prior written consent of the Architect - the design professional in responsible charge.

THESE DRAWINGS ARE INSTRUMENTS OF SERVICE THE PROPERTY OF CRAIG D. WILLIAMS, ARCHITECT, COPYRIGHT © 2015-2016

Visual contact with these plans and specifications shall constitute conclusive evidence of acceptance of these restrictions.


CRAIG D. WILLIAMS

LICENSED ARCHITECT CRAIG DOUGLAS WILLIAMS No. C026642 REN. 10-31-17 STATE OF CALIFORNIA

08.30.2016

NOT FOR CONSTRUCTION UNLESS SIGNED BY THE ARCHITECT AND STAMPED APPROVED BY THE AUTHORITY HAVING JURISDICTION

AGENCY APPROVALS

ACCESSIBILITY
UPGRADES
IVES POOL
AND POOL HOUSE
7400 WILLOW STREET
SEBASTOPOL, CA

PROJECT NUMBER:
082515.00
DATE:
30 AUGUST, 2016
DRAWN BY:
CW
CHECKED BY:
CW
REVISIONS:

DETAILS
**A3.12**


© THESE DRAWINGS ARE INSTRUMENTS OF SERVICE, AND ARE THE SOLE PROPERTY OF CRAIG WILLIAMS ARCHITECT. ANY USE WITHOUT WRITTEN CONSENT IS PROHIBITED.



Aug 31, 2016 - 7:30am cwilliams C:\Documents and Settings\cwilliams\Desktop\CLIENTS\SEBASTOPOL CITY\IVES\CD-A3.12.dwg

## SHEET KEY NOTES

1. (N) ACCESSIBLE CHAIN LINK GATE AND ACCESSIBLE HARDWARE. SEE DETAIL XX/XX.
2. (N) C.M.U. MASONY WALL TO MATCH (E). PAINT.
3. (N) WOOD SIDING AND FLASHING TRIM TO MATCH (E). PAINT.
4. (N) FIXED DBL. GLAZED WINDOWS.

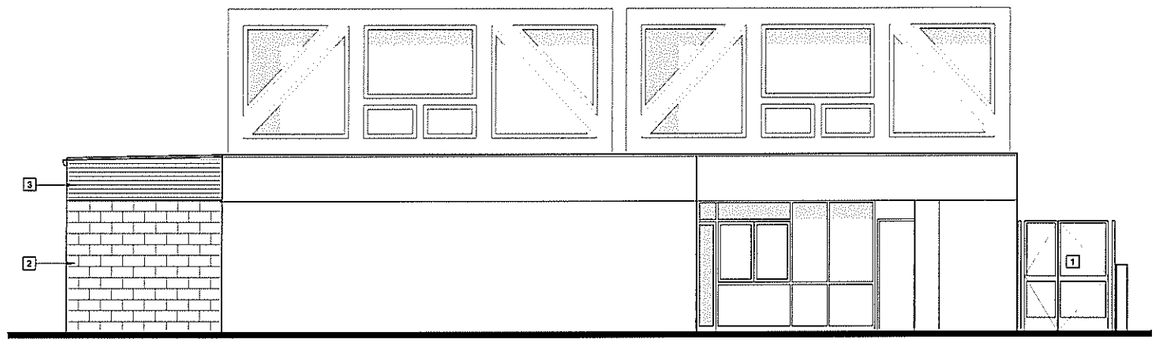


1 EXTERIOR ELEVATION - NORTH

1" = 4'-0"

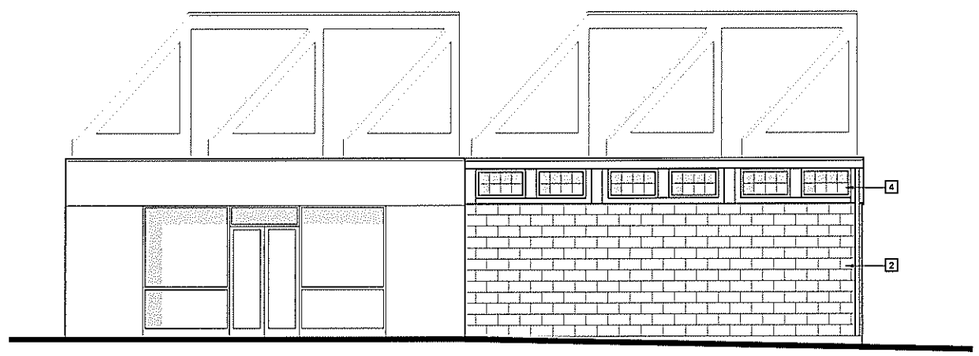


2 EXTERIOR ELEVATION - EAST

1" = 4'-0"

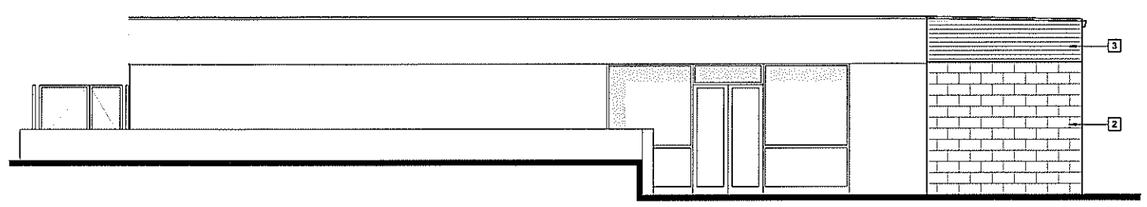


3 EXTERIOR ELEVATION - SOUTH

1" = 4'-0"


Craig D. Williams
Architecture
Interiors
Planning
Project
Management

295 Neva Street
Sebastopol, CA
95472

(707) 823-2724
CASpAccess@gmail.com



COPYRIGHT AND CONDITIONAL RIGHT OF USE

Drawings, specifications and all ideas, designs, and arrangements indicated on these drawings and specifications are and shall remain the property of Craig Williams, architect and are intended to be used in connection with this specific project only. No part shall be copied or disclosed to others or otherwise be used in connection with any other work or project other than the specified scope of work for which they have been prepared without the prior written consent of the architect. There shall be no changes or deviations from these drawings or the accompanying specifications without the prior written consent of the Architect - the design professional in responsible charge.

THESE DRAWINGS ARE INSTRUMENTS OF SERVICE THE PROPERTY OF CRAIG D. WILLIAMS, ARCHITECT, COPYRIGHT © 2015-2018

Visual contact with these plans and specifications shall constitute conclusive evidence of acceptance of these restrictions.


CRAIG D. WILLIAMS

LICENSED ARCHITECT
CRAIG DOUGLAS WILLIAMS
No. C026642
REN. 10-31-17
STATE OF CALIFORNIA

07.26.2016

NOT FOR CONSTRUCTION UNLESS SIGNED BY THE ARCHITECT AND STAMPED APPROVED BY THE AUTHORITY HAVING JURISDICTION

AGENCY APPROVALS

ACCESSIBILITY
UPGRADES
IVES POOL
AND POOL HOUSE
7400 WILLOW STREET
SEBASTOPOL, CA

PROJECT NUMBER:
082515.00
DATE:
26 JULY, 2016
DRAWN BY:
CHECKED BY:
CW
REVISIONS:

PARTIAL BUILDING
EXTERIOR
ELEVATION

**A4.0**


© THESE DRAWINGS ARE INSTRUMENTS OF SERVICE AND ARE THE SOLE PROPERTY OF CRAIG WILLIAMS ARCHITECT, AND USE WITHOUT WRITTEN CONSENT IS PROHIBITED.



Aug 23, 2016 - 10:18am cwilliams C:\Documents and Settings\cwilliams\Desktop\CLIENTS\SEBASTOPOL CITY\VES\CD-A4.0.dwg

# STORM WATER MANAGEMENT
# EROSION AND SEDIMENT CONTROL DETAILS & NOTES

## GENERAL REQUIREMENTS

CONSTRUCTION ACTIVITY ON THIS AND FUTURE ANTICIPATED PROJECTS OR THIS SITE WILL RESULT IN CUMULATIVELY LESS THAN ONE ACRE OF LAND DISTURBANCE. NEITHER THIS PROJECT NOR THE FUTURE ANTICIPATED PROJECT(S) INDICATED IN THESE PLANS IS CURRENTLY A PART OF ANY LARGER COMMON PLAN OF DEVELOPMENT WHICH WOULD RESULT IN LAND DISTURBANCE CUMULATIVELY EXCEEDING ONE ACRE, AS SUCH THIS PROJECT IS CATEGORICALLY EXEMPT FROM OBTAINING A CONSTRUCTION ACTIVITIES STORM WATER GENERAL PERMIT (2009-0009-DWQ PERMIT). CONSTRUCTION ACTIVITY IN THIS PROJECT DOES INCLUDE LIMITED AND CONTROLLED CLEARING, GRADING, EXCAVATION, STOCKPILING, AND RECONSTRUCTION OF EXISTING FACILITIES INVOLVING REMOVAL AND REPLACEMENT. CONSTRUCTION ACTIVITY ALSO INCLUDES ROUTINE MAINTENANCE SUCH AS, MAINTENANCE OF ORIGINAL LINE AND GRADE, HYDRAULIC CAPACITY, OR ORIGINAL PURPOSE OF THE FACILITY. REGARDLESS OF THE CATEGORICAL EXEMPTION, THE APPLICANT IS VOLUNTARILY IMPLEMENTING MANY BEST MANAGEMENT PRACTICES IN THE DESIGN, SEQUENCING, CONSTRUCTION AND POST CONSTRUCTION PRACTICES.

THIS PROJECT PROPOSES SOIL DISTURBANCE ACTIVITIES THAT IN AGGREGATE ENCOMPASS AREAS LESS THAN 1.0 ACRE, AND ON SLOPES LESS THAN 15%. SHOULD THE PROJECT EXPAND TO INCLUDE WORK INVOLVING SOIL DISTURBANCE ACTIVITIES THAT IN AGGREGATE ENCOMPASS AREAS GREATER THAN 1.0 ACRE, OR OCCUR ON SLOPES GREATER THAN 15% A DETAILED EROSION CONTROL PLAN WILL BE REQUIRED.

PERSONS AUTHORIZED TO PREPARE THE DETAILED EROSION CONTROL PLANS INCLUDE:
A CERTIFIED PROFESSIONAL SOIL EROSION AND SEDIMENT CONTROL SPECIALIST
A CALIFORNIA LICENSED CIVIL ENGINEER
A CALIFORNIA LICENSED LANDSCAPE ARCHITECT
A CALIFORNIA REGISTERED GEOLOGIST, CERTIFIED AS AN ENGINEERING GEOLOGIST
A CALIFORNIA LICENSED ARCHITECT.

MEASURES INCLUDED ARE DESCRIBED IN GREATER DETAIL IN THESE PLANS, SPECIFICATIONS, REFERENCED DETAILS AND STANDARDS. EROSION PREVENTION TECHNIQUES TO BE IMPLEMENTED ON THIS PROJECT ARE DESIGNED AND INTENDED TO PROTECT SOIL PARTICLES FROM THE FORCE OF FLOWING WATER, RAIN AND WIND SO THAT THEY WILL NOT ERODE, ENTER WATER COURSES OR RESULT IN ADVERSE ENVIRONMENTAL IMPACTS. THE TECHNIQUES PROVIDED IN THESE PLANS AND INCORPORATED BY REFERENCE INCLUDE, BUT ARE NOT LIMITED TO SUCH BEST MANAGEMENT PRACTICES (BMP'S) AS CONSTRUCTION SCHEDULING, GROUND COVER AND PLANTINGS, AND INSTALLATION OF EROSION CONTROL FACILITIES. EROSION CONTROL FOR THIS PROJECT CONSISTS OF PREPARING THE SOIL SURFACE AND IMPLEMENTING ONE OR MORE OF THE BMPS SHOWN IN THESE PLANS AS APPLICABLE TO DISTURBED SOIL AREAS.

## GENERAL NOTES

THE FOLLOWING IS AN INTEGRAL ASPECT OF THIS CONSTRUCTION PROJECT. THE FOLLOWING ARE REQUIREMENTS TO BE FOLLOWED BY THE CONTRACTOR DURING ALL PHASES OF THE PROJECT. PLEASE NOTE THAT THIS CONSTRUCTION SHOULD BE ACCOMPLISHED UNDER THE GUIDELINES OF THE NATIONAL POLLUTANT DISCHARGE ELIMINATION SYSTEM (NPDES) OF THE U.S. ENVIRONMENTAL PROTECTION AGENCY (EPA). EXCEPT FOR REMOVAL OF THE SITE OF SPOILS AND UNSUITABLE MATERIALS AS INDICATED IN THE PLANS (SUCH AS ASSOCIATED WITH DEMOLITION) IT WILL BE THE CONTRACTOR'S RESPONSIBILITY TO PREVENT SOIL OR SEDIMENT LOSS FROM THE CONSTRUCTION SITE.

THE STORM WATER MANAGEMENT PLAN FOR THIS ADA UPGRADE PROJECT DOES NOT PROPOSE TO INCLUDE MODIFICATION TO ANY AREA DRAINS. AT IDENTIFIED LOCATIONS STORM WATER WILL BE DIRECTED TOWARD AND INTO ON-SITE SWALES AND INTO EXISTING STORMWATER FACILITIES.

## TREE PROTECTION

CONSTRUCTION ACTIVITY ON THIS PROJECT AND AT THIS SITE SHALL EMPLOY APPROVED PRACTICES AND AGENCY REQUIRED MEASURES TO PROTECT EXISTING TREES, LANDSCAPING AND ASSOCIATED IRRIGATION SYSTEMS TO REMAIN.

REFERENCED REQUIREMENTS:

CITY OF COTATI MUNICIPAL CODE, CHAPTER 17, SECTION 17.54.040

REFERENCED STANDARDS:

INTERNATIONAL SOCIETY OF ARBORICULTURE'S TREE PRUNING GUIDELINES

AMERICAN NATIONAL STANDARDS INSTITUTE (ANSI) - LATEST EDITION
ANSI Z133.1: SAFETY REQUIREMENTS FOR TREE CARE OPERATIONS.
ANSI 760.1: SPECIFICATIONS FPR ACCEPTANCE OF NURSURY TREES AT THE TIME OF DELIVERY
ANSI A-300: PERFORMANCE SPECIFICATIONS OF THE PRUNING OF TREES, SHRUBS AND OTHER WOODY SHRUBS.

CONTACT AN ARBORIST PRIOR TO COMMENCING WORK AFFECTING OR POTENTIALLY AFFECTING TREES, SHRUBS OR LANDSCAPING.

## EROSION AND SEDIMENT CONTROL

1. SEE COUNTY OF SONOMA BEST MANAGEMENT PRACTICES FOR EROSION CONTROL. ONLY TO THE EXTENT THAT THE FOLLOWING NOTES DO NOT CONFLICT WITH OR PROVIDE FOR A LESSER STANDARD THAN THAT OF FEDERAL, STATE OR LOCAL AGENCY REQUIREMENTS SHALL THE FOLLOWING NOTES APPLY TO THIS PROJECT (THE MOST STRINGENT SHALL APPLY).
2. EROSION CONTROL MEASURES ARE INTENDED TO: 1) CONTROL THE DISPERSAL OF SEDIMENT AND DEBRIS AND CONTAIN SUCH WITHIN THE SITE OF THE WORK AND 2) TO PREVENT SEDIMENT AND DEBRIS FROM ENTERING THE CITY, COUNTY STORM DRAIN SYSTEM, SANITARY SEWER SYSTEM OR FROM LEAVING THE SITE. THE CONTRACTOR SHALL MAKE ADJUSTMENTS IN THE FIELD TO MAKE SURE THAT THIS CONCEPT IS CARRIED OUT.
3. EROSION CONTROL FACILITIES AND MEASURES CONSISTENT WITH CITY/COUNTY STANDARDS ARE TO BE INSTALLED AND OPERABLE BY OCTOBER 1st AND SHALL CONTINUE IN EFFECT UNTIL DISTURBED AREAS ARE STABILIZED OR UNTIL INSTALLATION OF THE PERMANENT SITE IMPROVEMENTS.
4. CONTRACTOR SHALL ASSUME APPLICABLE CITY/COUNTY CONCEPTS OF EROSION CONTROL AND SUCH, ARE MINIMUM REQUIREMENTS, THE FULL EXTENT OF WHICH ARE TO BE BY THE CONTRACTOR IN CONFORMANCE WITH SUCH CONCEPTS. CONTRACTOR IS RESPONSIBLE FOR THE EXACT DESIGN AND EXTENT OF THE EROSION CONTROL SYSTEM SO THAT IT ACHIEVES RESULTS CONSISTENT WITH THE CONTRACTOR'S USE AND MANAGEMENT OF THE CONSTRUCTION SITE. REQUIRED APPROVAL BY APPROPRIATE GOVERNMENTAL AGENCIES IS THE RESPONSIBILITY OF THE CONTRACTOR.
5. ALL EROSION CONTROL FACILITIES SHALL BE INSPECTED BY THE CONTRACTOR AND REPAIRED, AT THE CONCLUSION OF EACH WORKING DAY DURING THE RAINY SEASON. THE CONTRACTOR SHALL INSPECT THE EROSION CONTROL FACILITIES AND MAKE NECESSARY REPAIRS PRIOR TO ANTICIPATED STORMS AND AT REASONABLE INTERVALS DURING STORMS OF EXTENDED DURATION. REPAIRS TO DAMAGED FACILITIES SHALL BE MADE IMMEDIATELY UPON DISCOVERY.
6. AS SOON AS PRACTICAL FOLLOWING EACH STORM, THE CONTRACTOR SHALL REMOVE ANY ACCUMULATION OF SILT OR DEBRIS FROM THE EROSION CONTROL SEDIMENT BASINS AND SHALL CLEAR THE OUTLET PIPES OF ANY BLOCKAGE.
7. PROVISION SHALL BE MADE TO ASSURE THAT BORROW AREAS AND STOCK PILED SOILS ARE PROTECTED FROM EROSION WITH EROSION CONTROL MEASURES SATISFACTORY TO APPROPRIATE GOVERNMENTAL AGENCIES.
8. ALL STOCKPILE MATERIALS SHALL BE COVERED AND PROTECTED FROM THE ELEMENTS WITH A NON PLASTIC MEMBRANE SO AS TO PREVENT SOIL EROSION FROM OCCURRING. THIS COVER SHALL BE SECURED WITH ANCHORS OR WEIGHTS OF SUFFICIENT SIZE AND FREQUENCY TO PREVENT DISRUPTION OR REMOVAL BY WIND OR RAIN. ANCHORAGE AT THE BASE OF THE SLOPE SHALL BE AS INDICATED BY DETAIL ON THIS SHEET, ALL MEMBRANE AND COVERINGS SHALL BE INSPECTED AND MAINTAINED BY THE CONTRACTOR OR HIS REPRESENTATIVE ON A FREQUENT AND REGULAR BASIS, SPECIFICALLY BEFORE AND AFTER ANY INCLEMENT WEATHER, WITH ANY NECESSARY REPAIRS BEING IMMEDIATELY PERFORMED, COVERINGS SHALL REMAIN IN PLACE UNTIL THE STOCKPILES IS/ARE READY TO BE REMOVED FROM THE SITE, AT WHICH TIME THEY SHALL BE REMOVED AND DISPOSED OF BY THE CONTRACTOR.
9. APPROVED EARTHEN BERMS, STRAW BARRIERS AND/OR GEOTEXTILE FABRIC BARRIER (SILT FENCING) SHALL BE CONSTRUCTED AS SHOWN TO PREVENT SEDIMENT RUNOFF, OR THE EROSION OF BANKS OR ROADWAYS. ALL SUCH TEMPORARY EROSION CONTROL MEASURES SHALL BE REMOVED BY THE CONTRACTOR AS SOON AS CONSTRUCTION IS COMPLETED AND VEGETATION IS ESTABLISHED. HAY BALES SHALL NOT BE USED.
10. ALL PAVED AREAS SHALL BE KEPT CLEAR OF EARTH MATERIAL AND DEBRIS, SWEPT ON A REGULAR BASIS, TO THE SATISFACTION OF THE ON-SITE INSPECTORS AND OWNER'S REPRESENTATIVES.

    SWEEP OR VACUUM THE STREET PAVEMENT AND SIDEWALKS ADJOINING THE PROJECT SITE AND THE ON-SITE PAVED AREAS ON A DAILY BASIS AS REQUIRED BY THE CITY. SCRAPE CAKED MUD AND DIRT FROM THESE AREAS BEFORE SWEEPING. CORNERS AND HARD TO REACH AREAS SHALL BE SWEPT MANUALLY.
11. PERSON DESIGNATED BY THE CONTRACTOR AS RESPONSIBLE FOR EROSION CONTROL IMPLEMENTATION, TO BE IDENTIFIED BY THE CONTRACTOR.
12. WHEEL WASHERS SHALL BE INSTALLED AND USED TO CLEAN ALL TRUCKS AND EQUIPMENT LEAVING THE CONSTRUCTION SITE. IF WHEEL WASHERS CANNOT BE INSTALLED, TIRES OR TRACKS OF ALL TRUCKS AND EQUIPMENT SHALL BE WASHED OFF BEFORE LEAVING THE CONSTRUCTION SITE.
13. THE CONTRACTOR SHALL MANAGE OPERATIONS TO MINIMIZE ADVERSE OFF-SITE EFFECTS OF SOIL EROSION AND RESULTING SEDIMENT LOSS THROUGH THE USE OF PROPER CONSTRUCTION TECHNIQUES; AND BY INSTALLING BOTH TEMPORARY AND PERMANENT MANAGEMENT PRACTICES. ALL SOIL-DISTURBING ACTIVITIES PERFORMED BY THE CONTRACTOR WILL BE ACCOMPLISHED IN SUCH MANNER AS TO PREVENT LOSS OF SEDIMENT FROM THE CONSTRUCTION SITE DURING RAINFALL EVENTS. TO ACCOMPLISH THIS, THE FOLLOWING SPECIFIC STEPS WILL BE TAKEN DURING CONSTRUCTION:
14. IMMEDIATELY AFTER MOBILIZATION BUT PRIOR TO INITIATION ANY SOIL-DISTURBING ACTIVITIES, THE CONTRACTOR WILL INSTALL ALL SPECIFIED PERIMETER CONTROLS ON THE SITE. THESE PRACTICES HAVE BEEN DESIGNED TO TRAP ALL SEDIMENT PRODUCED DURING SOIL- DISTURBING ACTIVITIES, AND TO PREVENT OFF-SITE DAMAGE. IT IS RECOGNIZED THAT SOME SITE PREPARATION MAY BE REQUIRED TO PROPERLY INSTALL THESE PRACTICES.
15. THE RECOMMENDED SEQUENCE FOR THE INSTALLATION AND REMOVAL OF EROSION AND SEDIMENT CONTROL MEASURES IS AS FOLLOWS: PERIMETER CONTROL MEASURES (SILT BARRIERS AND FENCING) INSTALLED AT DESIGNATED AREAS; CLEANING OF STREET DURING CONSTRUCTION; SITE GRADING (INCLUDING TEMPORARY SLOPE STABILIZATION) AS NEEDED; INSTALLATION OF UTILITIES; BUILDING CONSTRUCTION; PAVING; FINAL GRADING; INSTALLATION OF SOD OR VEGETATIVE MATERIALS; BUILDING CONSTRUCTION; PAVING; FINAL GRADING; INSTALLATION OF SOD OR VEGETATIVE MATERIALS; REMOVAL OF TEMPORARY PRACTICES AND PERIMETER CONTROLS; AND SITE CLEANUP.
16. DURING ALL SOIL-DISTURBING ACTIVITIES, THE CONTRACTOR SHALL TAKE APPROPRIATE STEPS USING ACCEPTED CONSTRUCTION METHODS TO MINIMIZE EXPOSURE OF UNPROTECTED SOIL AND OTHER CONSTRUCTION MATERIALS TO RAINFALL. PARTICULAR CARE MUST BE EXERCISED WHEN DEALING WITH TOPSOIL STOCKPILES, FILL MATERIAL, OR SOIL ON SLOPES.
17. IF, DURING THE COURSE OF CONSTRUCTION, ANY AREA OF SOIL (INCLUDING STOCKPILES) REMAINS EXPOSED FOR MORE THAN FOURTEEN CALENDAR DAYS WITHOUT SUITABLE EROSION CONTROL, THEN TEMPORARY STABILIZATION MEASURES SHOULD BE INSTALLED UNLESS SOIL-DISTURBING ACTIVITIES ARE PLANNED ON SUCH AREAS WITHIN AN ADDITIONAL SEVEN CALENDAR DAYS. SUITABLE TEMPORARY STABILIZATION MEASURES ARE PERIMETER CONTROLS AND SILT BARRIERS (SUCH AS ROCK BAGS, SAND BAGS, AND SILT FENCING) ALONG ALL SIDE-SLOPE AND DOWN-SLOPE BORDERS OF THE DISTURBED AREA. NOTE THAT PERIMETER CONTROLS ALONE MAY NOT BE SUCCESSFUL; MOVEMENT OF LARGE AMOUNTS OF SEDIMENT PRODUCED BY HEAVY RAIN ON EXPOSED SOIL COULD OVERWHELM SUCH MEASURES.
18. AT THE CONTRACTOR'S DISCRETION, ADDITIONAL TEMPORARY EROSION CONTROL PRACTICES (SUCH AS ROCK BAGS, SAND BAG BARRIERS, AND SILT FENCES) MAY BE INSTALLED ALONG ANY DOWN-SLOPE OF SIDE-SLOPE PERIMETER OF A SOIL-DISTURBED AREA TO PREVENT SEDIMENT MOVEMENT. ANCHORED EROSION CONTROL MATTING, MULCHES, OR OTHER ACCEPTABLE METHODS MAY ALSO BE INSTALLED TO STABILIZE ANY UNPROTECTED SLOPES DURING CONSTRUCTION, AND HOLD THEM TO THE APPROPRIATE GRADE.
19. AS SITE AND STORM CONDITIONS WARRANT, THE CONTRACTOR MAY ALSO CHOOSE TO MODIFY THE TYPE OR ARRANGEMENT OF SPECIFIED PRACTICES TO IMPROVE THEIR EFFECTIVENESS. HOWEVER, IN NO EVENT SHALL ANY PRACTICE BE LESS STRINGENT THAN THE NATIONAL POLLUTION DISCHARGE ELIMINATION SYSTEM No. CAS 082597.
20. THE CONTRACTOR WILL INSPECT ALL SPECIFIED PRACTICES PRIOR TO, DURING AND AFTER ALL RAINFALL EVENTS TO INSURE THAT EACH SPECIFIED PRACTICE REMAINS INTACT AND EFFECTIVE. ANY DAMAGE NOTED DURING SUCH INSPECTIONS SHALL BE REPAIRED PROMPTLY TO RESTORE THE PRACTICE TO ORIGINAL SPECIFICATIONS. THE CONTRACTOR WILL BE RESPONSIBLE FOR MAINTENANCE OF ALL EROSION AND SEDIMENT CONTROL PRACTICES AS SPECIFIED IN THE PLANS, INCLUDING PERIODIC REGRADING, AND FINAL GRADING AFTER REMOVAL OF ALL SUCH PRACTICES.
21. IF AND WHEN WATER IS USED FOR DUST CONTROL OR TO PROMOTE VEGETATION, THE CONTRACTOR SHALL PREVENT THE ESCAPE OF THIS WATER AND ANY SEDIMENT IT MAY CARRY FROM THE CONSTRUCTION SITE.
23. DURING THE SITE CLEANUP PRIOR TO THE POSSESSION DATE, EACH TEMPORARY PRACTICE WILL BE COMPLETELY REMOVED AND THE AREA FINISHED TO THE APPROPRIATE POST-PROJECT CONDITION. THIS INVOLVES FINAL GRADING, AND INSTALLATION OF LANDSCAPE MATERIALS, SOD OR GRASS SEED ON ALL BARE SOIL AREAS AS INDICATED IN THE PLANS. A MINIMUM VEGETATION DENSITY OF SEVENTY PERCENT, OR AN EQUIVALENT SEDIMENT STABILIZATION MEASURE (GEOTEXTILES, MULCHES, OR GABIONS), IS REQUIRED UNTIL VEGETATION IS ESTABLISHED.
22. CARE MUST BE EXERCISED TO PREVENT EXCESSIVE OFF-SITE TRACKING OF MUD OR SEDIMENT BY CONSTRUCTION VEHICLES. THE CONTRACTOR SHALL BE RESPONSIBLE FOR CLEANING THE STREET IF AND WHEN MUD IS TRACKED ONTO THE STREET FROM THE CONSTRUCTION SITE.

23. SOIL EROSION AND SEDIMENTATION CONTROL SEQUENCE:
IN ACCORDANCE WITH REGULATIONS AND STANDARDS PROMULGATED UNDER THE AUTHORITY OF THE CALIFORNIA ENVIRONMENTAL QUALITY ACT AND CALIFORNIA PUBLIC RESOURCES CODE, AND THE CALIFORNIA COASTAL ACT, AS AMENDED; THE FEDERAL WATER POLLUTION CONTROL ACT AND THE NATIONAL POLLUTANT DISCHARGE ELIMINATION SYSTEM; AS PROVIDED IN ADDITION TO THE INFORMATION IN THE PROJECT PLANS AND SPECIFICATIONS, THE FOLLOWING GENERAL CONDITIONS APPLY TO THE EARTH MOVEMENT AUTHORIZED BY THE AGENCIES HAVING JURISDICTION AND AS SHOWN OR INDICATED IN THESE DOCUMENTS:
A. DESIGN, CONSTRUCT, AND COMPLETE EARTH DISTURBING ACTIVITIES IN A MANNER THAT LIMITS THE EXPOSED AREA OF DISTURBED LAND FOR THE SHORTEST PERIOD OF TIME.
B. REMOVE SEDIMENT CAUSED BY ACCELERATED SOIL EROSION FROM RUNOFF WATER BEFORE IT LEAVES THE SITE OF THE EARTH DISTURBING ACTIVITIES.
C. TEMPORARY OR PERMANENT CONTROL MEASURES SHALL BE DESIGNED AND INSTALLED TO CONVEY WATER AROUND, THROUGH OR FROM THE AREAS WHERE EARTH DISTURBING ACTIVITIES OCCUR AT A NON-EROSIVE VELOCITY.
D. INSTALL APPROPRIATE TEMPORARY SOIL EROSION AND SEDIMENTATION CONTROL MEASURES AS REQUIRED BEFORE OR UPON COMMENCEMENT OF EARTH DISTURBING ACTIVITY AND MAINTAIN THE MEASURES ON A DAILY BASIS. REMOVE TEMPORARY SOIL EROSION AND SEDIMENTATION CONTROL MEASURES AFTER REQUIRED PERMANENT SOIL EROSION MEASURES ARE IN PLACE AND THE AREA IS STABILIZED. ("STABILIZED"MEANS THE ESTABLISHMENT OF VEGETATION OR THE PROPER PLACEMENT, GRADING OR COVERING OF SOIL TO ENSURE ITS RESISTANCE TO SOIL EROSION, SLIDING, OR OTHER EARTH MOVEMENT.)
E. COMPLETE REQUIRED PERMANENT SOIL EROSION CONTROL MEASURE FOR THE EARTH DISTURBING ACTIVITIES WITHIN FIVE (5) CALENDAR DAYS AFTER FINAL GRADING OR UPON COMPLETION OF THE FINAL EARTH CHANGE. IF IT IS NOT POSSIBLE TO PERMANENTLY STABILIZE THE EARTH CHANGE, THEN MAINTAIN TEMPORARY SOIL EROSION AND SEDIMENTATION CONTROL MEASURES UNTIL PERMANENT SOIL EROSION CONTROL MEASURES ARE IN PLACE AND THE AREA IS STABILIZED.
F. THE CONTRACTOR IS RESPONSIBLE FOR MAINTAINING LANDSCAPING DURING ANY REQUIRED WARRANTY PERIOD. AFTER THE REQUIRED WARRANTY HAS EXPIRED, THE PERMANENT BMP MEASURES WILL BE MAINTAINED BY THE OWNER AS APPROPRIATE.

25. SOIL EROSION AND SEDIMENTATION CONTROL MAINTENANCE NOTES
A. INSTALL TEMPORARY INLET FILTERS, AS REQUIRED BY AHJ, AT ALL ADJACENT AND DOWN-GRADIENT STORM WATER INLETS, CATCH BASINS AND MANHOLES THAT MAY BE IMPACTED. CATCH BASIN INLET FILTERS SHALL BE MAINTAINED CLEAN AT ALL TIMES THROUGHOUT THE CONSTRUCTION PERIOD. IF A FILTER HAS HOLES OR IS INUNDATED WITH SEDIMENT, THE FILTER WILL REQUIRE REPLACEMENT.
B. DURING THE PRECIPITATION SEASON, SILT FENCES SHALL BE MAINTAINED AT ALL TIMES THROUGHOUT THE CONSTRUCTION PERIOD. IF REPAIR OR REPLACEMENT IS NECESSARY, IT SHALL BE PERFORMED ACCORDING TO THE MANUFACTURER'S SPECIFICATIONS. MAINTENANCE INCLUDES THE REMOVING OF BUILT-UP SEDIMENT THAT ACCUMULATES TO 12" OR 1/2 THE HEIGHT OF THE FENCE (WHICHEVER IS GREATER. CONTRACTOR SHALL REMOVE, REPLACE, RETRENCH, OR RE-BACKFILL THE FENCE IF IT FAILS TO THE EXTENT NECESSARY TO RESTORE THE INTENDED FUNCTION AND FULFILL THE INTENDED PURPOSE OF THE SILT AND EROSION CONTROL FACILITY. ADDITIONALLY, THE CONTRACTOR SHALL REINSTALL ANY PORTION OF THE FENCING DAMAGED BY CONSTRUCTION MACHINERY OR CONSTRUCTION ACTIVITY.
C. PLACE STOCKPILES AND OTHER SPOIL PILES AWAY FROM THE DRAINAGE SYSTEMS AND DRAINAGE WAYS TO MINIMIZE SEDIMENT TRANSPORT. IF THE STOCKPILE AND/OR SPOIL PILE MUST REMAIN ON-SITE OVERNIGHT, OR IF THE WEATHER CONDITIONS INDICATE THE CHANCE FOR PRECIPITATION,
A) COVER THE PILE WITH WATER REPELLENT MATERIAL TO PREVENT EROSION AND/OR
B) INSTALL SILT FENCING AROUND THE BASE OF THE PILE TO PREVENT TRANSPORT OF SEDIMENT TO THE STORM WATER SYSTEM, OR APPLY OTHER CONTROL METHODS APPROPRIATE TO THE SIDE.
CONTROL MEASURES TO GUARD AGAINST WIND EROSION MUST ALSO BE EMPLOYED, SUCH AS WETTING OR COVERING THE STOCKPILES. KEEP AS FEW STOCKPILES AS POSSIBLE DURING THE COURSE OF THE PROJECT.
D. THROUGHOUT THE CONSTRUCTION PERIOD, ALL MUD/SILT TRACKED ONTO EXISTING ROADS FROM THE SITE DUE TO CONSTRUCTION SHALL BE IMMEDIATELY REMOVED BY THE CONTRACTOR.
E. SEEDING OR OTHER STABILIZATION SHALL BE REQUIRED IMMEDIATELY TO AREAS WHICH HAVE BEEN DAMAGED BY RUNOFF.
F. THE CONTRACTOR SHALL MAINTAIN DUST CONTROL ON THE SITE THROUGHOUT THE DURATION OF THE CONSTRUCTION PROCESS.

26. SUSPECT CONTAMINATION:
IF SUSPECTED CONTAMINATED SOIL, GROUNDWATER, OR OTHER UNKNOWN MATERIAL IS ENCOUNTERED DURING WORK ACTIVITIES CONTACT THE OWNER AND THE AUTHORITY HAVING JURISDICTION IMMEDIATELY. SUSPECT CONTAMINATED SOIL MAY EXHIBIT CHEMICAL OR UNUSUAL ODORS, STAINING, UNUSUAL COLORING, AND/OR CONTAIN MAN-MADE DEBRIS. SUSPECT CONTAMINATED GROUNDWATER MAY EXHIBIT CHEMICAL OR UNUSUAL ODORS, UNUSUAL COLORING, AND/OR SHEEN AND/OR CONTAIN MAN-MADE DEBRIS. IMMEDIATELY CEASE ALL EXCAVATION, DEWATERING, TRANSPORT, OR DISTURBANCE OF THE SUSPECT MATERIAL UNTIL GIVEN DIRECTION BY THE AHJ REPRESENTATIVE. DEWATERING GROUNDWATER AND SURFACE WATER WHICH IS FREE OF CONTAMINATION AND SEDIMENT MAY, AFTER VERIFICATION WITH THE AHJ, BE DISCHARGED TO A STORM DRAIN. DRAINS MUST BE PROTECTED FROM SEDIMENT BY USING APPROVED FILTER FABRIC OR SILT SACK METHODS. HOWEVER, IF FIELD INDICATORS INDICATE POSSIBLE CONTAMINATION THE WATER CANNOT BE DISCHARGED. IMMEDIATELY CEASE ALL DISCHARGE AND CONTACT THE AHJ FOR INSPECTION OF THE WATER AND DISPOSAL DETERMINATION.

## STORM WATER MANAGEMENT

THE CONTRACTOR SHALL PROVIDE CONTROL OF STORM WATER RUNOFF FROM THE SITE BY USING GUTTERS, CURBS, INLETS, PIPING, AND OUTLETS TO THE RECEIVING STREAM. THE EROSION AND SEDIMENT CONTROL MEASURES INDICATED IN THESE PLANS, IF FOLLOWED, WILL ALSO PROVIDE SOME TEMPORARY STORM WATER CONTROLS. DURING THE COURSE OF CONSTRUCTION, THE CONTRACTOR WILL TIMELY INSTALL AND MAINTAIN STORM WATER CONTROLS IN THE SEQUENCE SPECIFIED HEREIN TO PROVIDE COMPREHENSIVE MANAGEMENT OF STORM WATER FOR A PROJECT OF THIS NATURE AND RESPONSIVE TO IMMINENT OR SEASONAL STORM CONDITIONS.

IF SITE OR EARTH DISTURBING CONSTRUCTION ACTIVITIES FOR THIS PROJECT ARE SCHEDULED TO OCCUR DURING OR WILL EXTEND INTO THE RAINY SEASON (BETWEEN OCTOBER 15 AND MARCH 15) THE CONTRACTOR SHALL DEVELOP, IMPLEMENT AND MAINTAIN A STORM WATER MANAGEMENT PROGRAM SUBJECT TO THE REVIEW AND APPROVAL OF JURISDICTIONS HAVING AUTHORITY. CONTRACTOR IS RESPONSIBLE FOR TIMELY VERIFICATION AND IMPLEMENTATION OF MINIMUM REQUIRED MEASURES PRIOR TO CONDITIONS ARISING NECESSITATING SUCH MEASURES.

## GENERAL CONDITIONS

1. COMPLY WITH LOCAL, REGIONAL, STATE AND FEDERAL GUIDELINES, STANDARDS AND REGULATIONS TO LIMIT IMPACTS UPON AND IMPLEMENT PROCEDURES TO ADEQUATELY PROTECT SENSITIVE ENVIRONMENTAL RESOURCES, HABITAT, WATERWAYS, AIR, LAND, GROUNDWATER, WATERSHED, AND ECOSYSTEMS.
2. OWNER / CONTRACTOR IS ADVISED THAT THE STATE OF CALIFORNIA HAS ADOPTED THE NATIONAL POLLUTION DISCHARGE ELIMINATION SYSTEM (NPDES) No. CAS 082597 REQUIREMENTS IN ACCORDANCE WITH THE REQUIREMENTS OF THE CLEAN WATER ACT. THIS PROJECT IS SUBJECT TO ALL REQUIREMENTS CONTAINED IN THOSE ACTS, AS WELL AS THE REQUIREMENTS OF THE STATE AND REGIONAL WATER QUALITY CONTROL MEASURES APPLICABLE TO THE SITE OF THE WORK AND WITH THE GENERAL CONSTRUCTION PERMIT WATER QUALITY CONTROL ORDER No. 99-08-DWQ. THE CONTRACTOR SHALL ABIDE BY ALL OF THE LAWS, ORDINANCES AND REGULATIONS ASSOCIATED WITH THE NPDES, CLEAN WATER ACT AND THE GENERAL CONSTRUCTION PERMIT.
3. AS PART OF THE NPDES REQUIREMENTS A STORM WATER POLLUTION PREVENTION PLAN (SWPPP) MUST BE DEVELOPED BY THE CONTRACTOR AND IMPLEMENTED FOR THIS PROJECT; AN OUTLINE OF THIS PLAN IS CONTAINED IN THESE CONSTRUCTION DOCUMENTS; THE CONTRACTOR IS RESPONSIBLE FOR MAKING ANY NECESSARY ADJUSTMENTS AND UPDATING THE SWPPP AS NECESSARY THROUGHOUT THE CONSTRUCTION OF THE PROJECT.
4. THE CONTRACTOR MUST KEEP CURRENT COPIES OF THESE RECORDS, THE SWPPP AND LOGS AT THE CONSTRUCTION SITE FOR VIEWING BY THE STATE OF CALIFORNIA REGIONAL WATER QUALITY CONTROL BOARD OR LOCAL/COUNTY MUNICIPAL AGENCIES DURING THE COURSE OF CONSTRUCTION.
5. THE SWPPP MUST BE MAINTAINED THROUGH THE COURSE OF CONSTRUCTION AND BE ACCESSIBLE AT ALL TIMES, AT THE CONSTRUCTION SITE. THE CONTRACTOR IS ADVISED THAT HE/SHE SHALL CONFORM TO THE REQUIREMENTS AND SHALL IMPLEMENT ALL THE MEASURES REQUIRED BY THE SWPPP, INCLUDING BUT NOT NECESSARILY LIMITED TO MAINTENANCE, DILIGENT KEEPING OF RECORDS AND LOGS REQUIRED BY THE SWPPP AND MAKING NECESSARY ADJUSTMENTS AND UPDATES NECESSARY DURING THE COURSE OF CONSTRUCTION.

NOTES:
1. ALL PLANTS DESIGNATED TO BE SAVED SHALL BE PROTECTED BY FENCING, AS ILLUSTRATED.
2. INSTALL TREE PROTECTION FENCE AT TREE DRIP LINE OR AT EDGE OF DISTURBED AREA, AS SHOWN ON PLANS, PRIOR TO COMMENCEMENT OF CONSTRUCTION.
3. SPACE TREE PROTECTION ZONE SIGNS A MINIMUM OF ONE EVERY 300 FEET. THE SIZE OF EACH SIGN MUST BE A MINIMUM OF 2' x 2' AND BE VISIBLE FROM BOTH SIDES OF THE FENCE.
THE SIGN MUST CONTAIN THE FOLLOWING LANGUAGE IN BOTH ENGLISH & SPANISH: "TREE PROTECTION ZONE, KEEP OUT".
3. THERE SHALL BE NO STORAGE OF MATERIAL WITHIN THE BOUNDARIES OF THE TREE PROTECTION FENCING.
4. TREE PROTECTION FENCING SHALL BE MAINTAINED THROUGHOUT THE DURATION OF THE PROJECT.
5. FENCE MATERIAL ORANGE, UV RESISTANT HIGH TENSILE STRENGTH POLYETHYLENE LAMINAR BARRICADE FABRIC

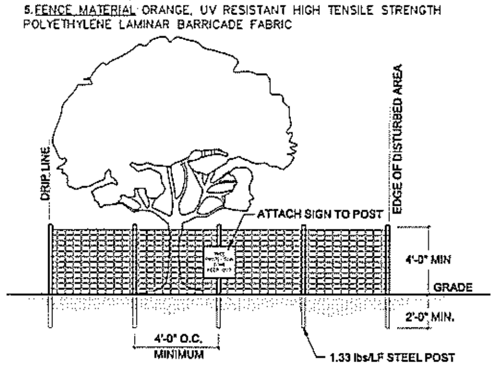


(16) TREE PROTECTION FENCING
1/4" = 1'-0" 02-713

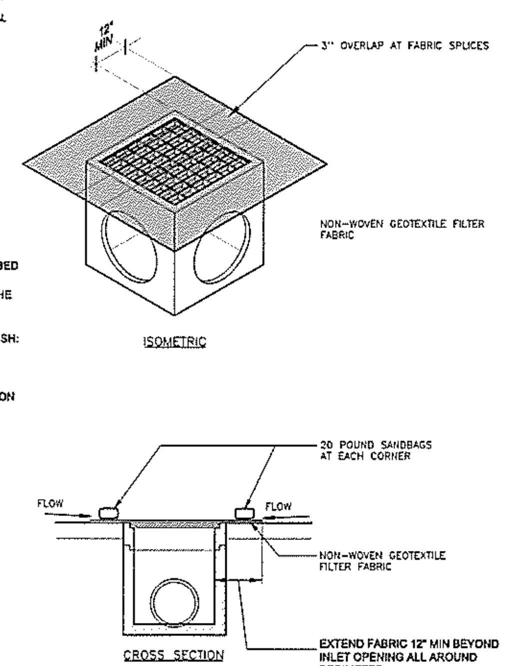


NOTES.
1. DAILY INSPECTION SHALL BE MADE BY THE CONTRACTOR AND SILT ACCUMULATION MUST BE REMOVED WHEN DEPTH REACHES 2"
2. CONTRACTOR SHALL MONITOR THE PERFORMANCE OF INLET PROTECTION DURING EACH RAINFALL EVENT AND IMMEDIATELY CLEAN THE INLET PROTECTION IF EXCESSIVE PONDING OCCURS
3. INLET PROTECTIONS SHALL BE REMOVED AS SOON AS THE SOURCE OF SEDIMENT IS STABILIZED.

(12) INLET PROTECTION
FULL SCALE 08/21/03 15:30

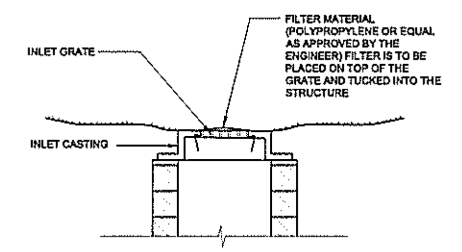


(7) INLET FILTER - GREEN BELT
NO SCALE 02-600

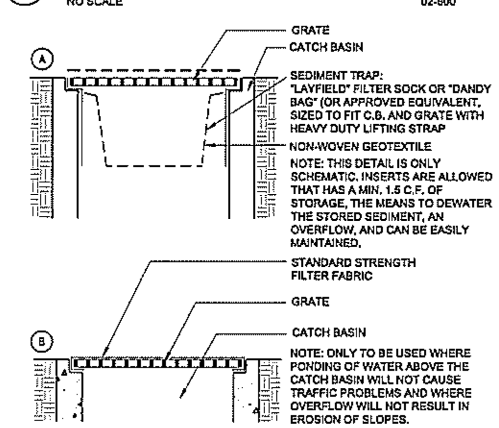


(8) SILT CONTROL
N.T.S. 02-068


Craig D. Williams
Architecture
Interiors
Planning
Project
Management

295 Neva Street
Sebastopol, CA
95472

(707) 823-2724
CASpAccess@gmail.com



COPYRIGHT AND CONDITIONAL RIGHT OF USE
Drawings, specifications and all ideas, designs, and arrangements indicated on these drawings and specifications are and shall remain the property of Craig Williams, architect and are intended to be used in connection with this specific project only. No part shall be copied or disclosed to others or otherwise be used in connection with any other work or project other than the specified scope of work for which they have been prepared without the prior written consent of the architect. There shall be no changes or deviations from these drawings or the accompanying specifications without the prior written consent of the Architect - the design professional in responsible charge.

THESE DRAWINGS ARE INSTRUMENTS OF SERVICE THE PROPERTY OF CRAIG D. WILLIAMS, ARCHITECT. COPYRIGHT© 2015-2016

Visual contact with these plans and specifications shall constitute conclusive evidence of acceptance of these restrictions.


CRAIG D. WILLIAMS
LICENSED ARCHITECT
CRAIG DOUGLAS WILLIAMS
No. C026642
REN. 10-31-17
STATE OF CALIFORNIA
08212016

NOT FOR CONSTRUCTION UNLESS SIGNED BY THE ARCHITECT AND STAMPED APPROVED BY THE AUTHORITY HAVING JURISDICTION

AGENCY APPROVALS

ACCESSIBILITY UPGRADES
IVES POOL AND POOL HOUSE
7400 WILLOW STREET
SEBASTOPOL, CA

PROJECT NUMBER: 082515.00
DATE: 21 AUGUST, 2016
DRAWN BY: CW
CHECKED BY: CW
REVISIONS:

ENVIRONMENTAL PROTECTION
BEST MANAGEMENT PRACTICES

EC1.0


© THESE DRAWINGS ARE INSTRUMENTS OF SERVICE AND ARE THE SOLE PROPERTY OF CRAIG WILLIAMS ARCHITECT. ANY USE WITHOUT WRITTEN CONSENT IS PROHIBITED.

# LINEAR APPLICATION OF TREE ROOT BARRIERS

**NOTES:**

1. TOP OF BARRIER MUST BE AT GRADE, (NEVER BELOW).
2. POSITION BARRIER AGAINST STRUCTURE OR AS CLOSE TO STRUCTURE AS POSSIBLE.
3. ROOT GUARD BARRIER TO BE INSTALLED ALONG THE LENGTH OF REPLACED CURB / WALK OR TO THE LIMITS OF THE TREE DRIP LINE.
4. ROOT GUARD BARRIERS SHALL NOT BE INSTALLED IN AREAS WHERE THERE ARE NO EXISTING / NEW TREES.
5. WHEN ROOT PRUNING ROOTS 1" OR LESS IN DIAMETER ALONG SIDEWALKS, A 18" MIN ROOT GUARD BARRIER SHALL BE USED.
6. ROOT PRUNING OF ROOTS OVER 2" IN DIAMETER REQUIRES ARBORIST WRITTEN APPROVAL; WHEN SO APPROVED, A 24" MIN ROOT GUARD BARRIER SHALL BE USED.
7. DURING CONSTRUCTION THE BARRIER MAYBE PLACED AGAINST THE INSIDE OF THE FORM.
8. THE RAISED ROOT DEFLECTORS (REINFORCING RIBS) MUST FACE TOWARDS THE TREE.
9. ROOT PRUNING TRENCHES SHALL BE BACKFILLED WITH SELECT NATIVE BACKFILL MATERIAL.
10. ALL WORK ON REGULATED TREES SHALL BE IN ACCORDANCE WITH THE MOST CURRENT EDITION OF THE FOLLOWING INDUSTRY STANDARDS: STANDARD PRACTICES FOR TREE CARE OPERATIONS - ANSI A300-1995 APPENDIX G; SAFETY STANDARDS, ANSI Z133.1-1994, APPENDIX F; AND TREE PRUNING GUIDELINES, APPENDIX E.

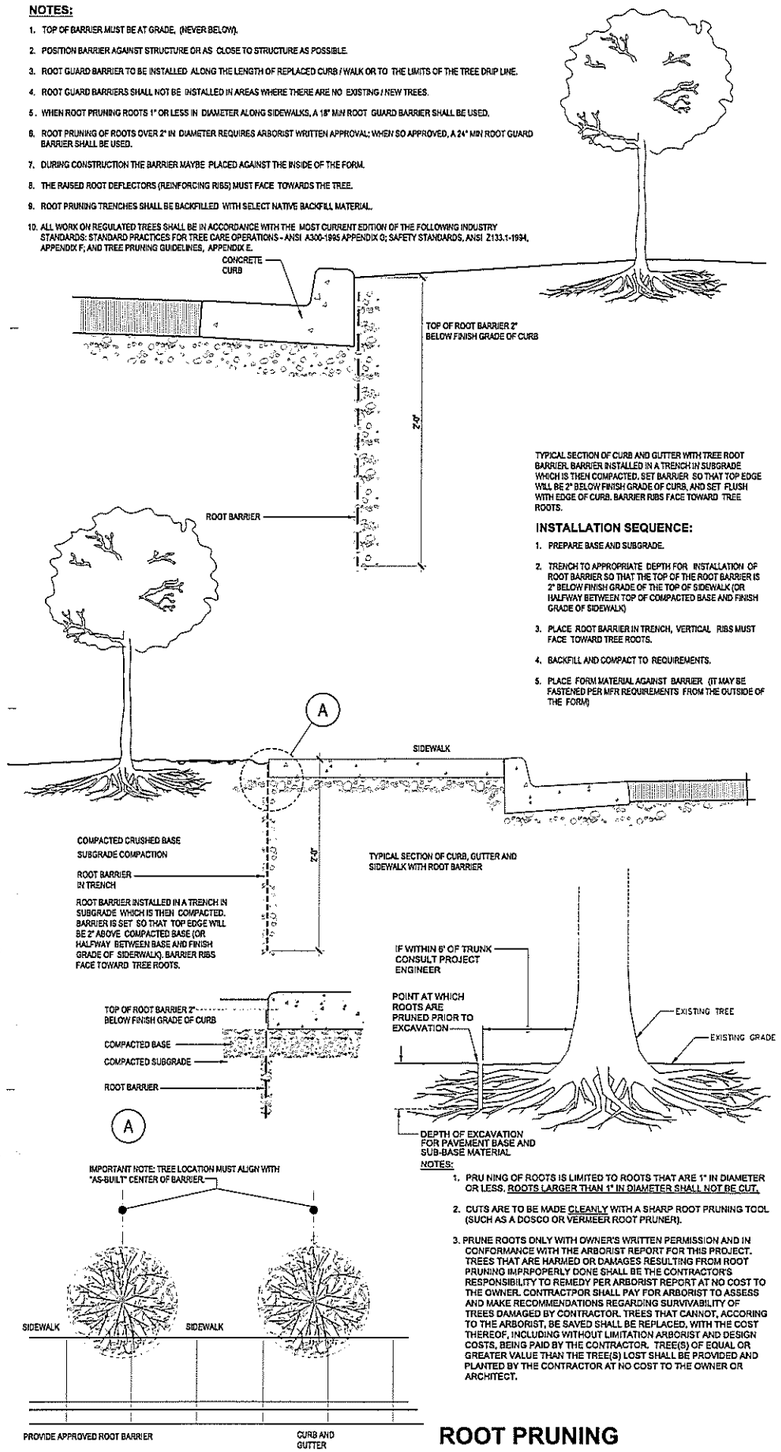


TYPICAL SECTION OF CURB AND GUTTER WITH TREE ROOT BARRIER. BARRIER INSTALLED IN A TRENCH IN SUBGRADE WHICH IS THEN COMPACTED. SET BARRIER SO THAT TOP EDGE WILL BE 2" BELOW FINISH GRADE OF CURB, AND SET FLUSH WITH EDGE OF CURB. BARRIER RIBS FACE TOWARD TREE ROOTS.

## INSTALLATION SEQUENCE:

1. PREPARE BASE AND SUBGRADE.
2. TRENCH TO APPROPRIATE DEPTH FOR INSTALLATION OF ROOT BARRIER SO THAT THE TOP OF THE ROOT BARRIER IS 2" BELOW FINISH GRADE OF THE TOP OF SIDEWALK (OR HALFWAY BETWEEN TOP OF COMPACTED BASE AND FINISH GRADE OF SIDEWALK)
3. PLACE ROOT BARRIER IN TRENCH, VERTICAL RIBS MUST FACE TOWARD TREE ROOTS.
4. BACKFILL AND COMPACT TO REQUIREMENTS.
5. PLACE FORM MATERIAL AGAINST BARRIER (IT MAY BE FASTENED PER MFR REQUIREMENTS FROM THE OUTSIDE OF THE FORM)

NOTES:

1. PRUNING OF ROOTS IS LIMITED TO ROOTS THAT ARE 1" IN DIAMETER OR LESS. ROOTS LARGER THAN 1" IN DIAMETER SHALL NOT BE CUT.
2. CUTS ARE TO BE MADE CLEANLY WITH A SHARP ROOT PRUNING TOOL (SUCH AS A DOSCO OR VERMEER ROOT PRUNER).
3. PRUNE ROOTS ONLY WITH OWNER'S WRITTEN PERMISSION AND IN CONFORMANCE WITH THE ARBORIST REPORT FOR THIS PROJECT. TREES THAT ARE HARMED OR DAMAGES RESULTING FROM ROOT PRUNING IMPROPERLY DONE SHALL BE THE CONTRACTOR'S RESPONSIBILITY TO REMEDY PER ARBORIST REPORT AT NO COST TO THE OWNER. CONTRACTPOR SHALL PAY FOR ARBORIST TO ASSESS AND MAKE RECOMMENDATIONS REGARDING SURVIVABILITY OF TREES DAMAGED BY CONTRACTOR. TREES THAT CANNOT, ACCORING TO THE ARBORIST, BE SAVED SHALL BE REPLACED, WITH THE COST THEREOF, INCLUDING WITHOUT LIMITATION ARBORIST AND DESIGN COSTS, BEING PAID BY THE CONTRACTOR. TREE(S) OF EQUAL OR GREATER VALUE THAN THE TREE(S) LOST SHALL BE PROVIDED AND PLANTED BY THE CONTRACTOR AT NO COST TO THE OWNER OR ARCHITECT.

## ROOT PRUNING

# BEST MANAGEMENT PRACTICES

1. THE CONTRACTOR SHALL WHERE NECESSARY TO ACCOMPLISH THE INTENDED PURPOSE OF THESE ENVIRONMENTAL PROTECTIONS EMPLOY THE USE OF DISTRIBUTED SMALL-SCALE CONTROLS OR INTEGRATED BEST MANAGEMENT PRACTICES (BMP's) THAT SERVE TO MINIMIZE ALTERATIONS TO THE NATURAL PRE-DEVELOPMENT HYDROLOGIC CHARACTERISTICS AND CONDITIONS OF THE SITE, AND EFFECTIVELY ADDRESS POLLUTANTS OF CONCERN.
2. ALL BMP's SHALL BE OPERATED, MONITORED, AND MAINTAINED IN ACCORDANCE WITH MANUFACTURER'S SPECIFICATIONS WHERE APPLICABLE, OR IN ACCORDANCE WITH WELL RECOGNIZED TECHNICAL SPECIFICATIONS APPROPRIATE TO THE BMP FOR THE LIFE OF THE PROJECT AND AT A MINIMUM, ALL STRUCTURAL BMPS SHALL BE INSPECTED, CLEANED-OUT, AND WHERE NECESSARY, REPAIRED PRIOR TO THE ONSET OF THE STORM SEASON (OCTOBER 15TH EACH YEAR) AND AT REGULAR INTERVALS AS NECESSARY BETWEEN OCTOBER 15TH AND APRIL 15TH OF EACH YEAR. DEBRIS AND OTHER WATER POLLUTANTS REMOVED FROM STRUCTURAL BMP's DURING CLEAN-OUT SHALL BE CONTAINED AND DISPOSED OF IN A PROPER MANNER.
3. NO DEMOLITION OR CONSTRUCTION EQUIPMENT, MATERIALS, OR ACTIVITY SHALL BE PLACED IN OR OCCUR IN ANY LOCATION THAT WOULD RESULT IN IMPACTS TO ENVIRONMENTALLY SENSITIVE HABITAT AREAS, STREAMS, WETLANDS OR THEIR BUFFERS.
4. ANY AND ALL DEBRIS RESULTING FROM DEMOLITION OR CONSTRUCTION ACTIVITIES SHALL BE REMOVED FROM THE PROJECT SITE WITHIN 1 WEEK OF COMPLETION OF THE PROJECT.
5. DEMOLITION OR CONSTRUCTION DEBRIS AND SEDIMENT SHALL BE REMOVED FROM WORK AREAS AND DEPOSITED IN SECURED AREAS AND DEBRIS BOXES EACH DAY THAT DEMOLITION OR CONSTRUCTION OCCURS TO PREVENT THE ACCUMULATION OF SEDIMENT AND OTHER DEBRIS THAT MAY BE DISCHARGED INTO SENSITIVE HABITAT OR COASTAL WATERS.
6. ALL TRASH AND DEBRIS SHALL BE DISPOSED IN THE PROPER TRASH AND RECYCLING RECEPTACLES AT THE END OF EVERY CONSTRUCTION DAY.
7. THE CONTRACTOR SHALL PROVIDE ADEQUATE DISPOSAL FACILITIES FOR SOLID WASTE, INCLUDING EXCESS CONCRETE, PRODUCED DURING DEMOLITION OR CONSTRUCTION.
8. DEBRIS SHALL BE DISPOSED OF AT A LEGAL DISPOSAL SITE OR RECYCLED AT A COUNTY MUNICIPAL LICENSED RECYCLING FACILITY.
9. ALL STOCK PILES AND CONSTRUCTION MATERIALS SHALL BE STORED AND LOCATED SO AS NOT TO HAVE DELETERIOUS EFFECT ON ANY DRAIN INLETS, WATERWAY, OR DISPERSED OR ERODED INTO AREAS OUTSIDE THE DESIGNATED CONSTRUCTION ZONE OR INTO ANY SENSITIVE HABITAT.
10. MACHINERY AND EQUIPMENT SHALL BE MAINTAINED AND WASHED IN CONFINED AREAS SPECIFICALLY DESIGNED TO CONTROL RUNOFF. THINNERS OR SOLVENTS SHALL NOT BE DISCHARGED ONTO THE GROUND, OR INTO SANITARY OR STORM SEWER SYSTEMS. THE DISCHARGE OF ANY HAZARDOUS MATERIALS INTO ANY RECEIVING WATERS SHALL BE PROHIBITED.
11. BEST MANAGEMENT PRACTICES (BMP's) AND GOOD HOUSEKEEPING PRACTICES (GHP's) ARE DESIGNED AND SHALL BE IMPLEMENTED TO PREVENT SPILLAGE AND/OR RUNOFF OF DEMOLITION OR CONSTRUCTION-RELATED MATERIALS, AND TO CONTAIN SEDIMENT OR CONTAMINANTS ASSOCIATED WITH DEMOLITION OR CONSTRUCTION ACTIVITY, AND SUCH SHALL BE IMPLEMENTED PRIOR TO THE ON-SET OF SUCH ACTIVITY AND FOR THE DURATION OF CONSTRUCTION OF THIS PROJECT.
12. ALL BMP's SHALL BE MAINTAINED IN A FUNCTIONAL CONDITION THROUGHOUT THE DURATION OF CONSTRUCTION ACTIVITY.
13. CONTRACTOR SHALL MINIMIZE RISKS TO LIFE AND PROPERTY IN AREAS OF HIGH GEOLOGIC, FLOOD, AND FIRE HAZARD.
14. CONTRACTOR SHALL ASSURE STABILITY AND STRUCTURAL INTEGRITY, AND NEITHER CREATE NOR CONTRIBUTE TO EROSION, INSTABILITY, OR DESTRUCTION OF THE SITE OR SURROUNDING AREA OR IN ANY WAY REQUIRE THE CONSTRUCTION OF PROTECTIVE DEVICES THAT WOULD SUBSTANTIALLY ALTER NATURAL LANDFORMS ALONG STREAMS, EMBANKMENTS, BLUFFS OR CLIFFS.
15. STORAGE OF MATERIALS, MECHANIZED EQUIPMENT AND REMOVAL OF DEBRIS MATERIALS: NO CONSTRUCTION MATERIALS, EQUIPMENT, DEBRIS, OR WASTE SHALL BE PLACED OR STORED WHERE IT MAY BE SUBJECT TO WIND, OR RAIN EROSION AND DISPERSION.
16. MACHINERY OR CONSTRUCTION MATERIALS NOT ESSENTIAL FOR PROJECT IMPROVEMENTS ARE PROHIBITED AT ALL TIMES IN ENVIRONMENTALLY SENSITIVE ZONES. NO MATERIALS OR EQUIPMENT IS PERMITTED TO BE STORED OR UNATTENDED IN SUCH ZONES.
17. DURING AND AT THE END OF THE CONSTRUCTION PERIOD, THE CONTRACTOR SHALL INSPECT THE PROJECT AREA AND ENSURE THAT NO DEBRIS, TRASH OR CONSTRUCTION MATERIAL HAS BEEN LEFT OUTSIDE THE LIMITS OF THE DESIGNATED LIMITS OF CONSTRUCTION IN LANDSCAPED AREAS AND THAT THE PROJECT HAS NOT CREATED ANY HAZARD TO THE PUBLIC.
18. EROSION CONTROL/SEDIMENTATION BEST MANAGEMENT PRACTICES (BMPS) SHALL BE USED TO CONTROL ADVERSE SEDIMENTATION IMPACTS TO STORM WATER DURING CONSTRUCTION. BMPS SHALL INCLUDE, BUT ARE NOT LIMITED TO: PLACEMENT OF SAND BAGS AROUND DRAINAGE INLETS WHERE OCCUR TO PREVENT RUNOFF / SEDIMENT TRANSPORT INTO ADJACENT BODIES OF WATER OR STREAMS, VEGETATED AREAS, OR RIPARIAN AREAS. A PRE-CONSTRUCTION MEETING SHALL BE SCHEDULED BY CONTRACTOR TO REVIEW PROCEDURAL AND BMP GUIDELINES.
19. THE CONTRACTOR SHALL DISPOSE OF ALL DEMOLITION AND CONSTRUCTION DEBRIS RESULTING FROM THE PROPOSED PROJECT AT AN OFF-SITE APPROPRIATE AND LAWFUL REFUSE AND CONSTRUCTION WASTE DISPOSAL SITE.
20. REASONABLE AND PRUDENT MEASURES SHALL BE TAKEN TO PREVENT ANY DISCHARGE OF DELETERIOUS OR HAZARDOUS MATERIALS, INCLUDING WITHOUT LIMITATION, FUEL OR OILY WASTE FROM HEAVY MACHINERY OR CONSTRUCTION EQUIPMENT ONTO SURROUNDING AREAS OR INTO STORMWATER DISCHARGE SYSTEMS. THE CONTRACTOR SHALL HAVE ADEQUATE EQUIPMENT AVAILABLE TO CONTAIN ANY SUCH SPILL IMMEDIATELY.
21. ALL DEBRIS AND TRASH SHALL BE DISPOSED OF IN THE PROPER TRASH AND RECYCLING RECEPTACLES AT THE END OF EACH CONSTRUCTION DAY.
22. THE BEACH, PARKING AREA, COUNTY PROPERTY, EXISTING GANGWAY AND DOCK TO REMAIN, AND ALL OTHER AREAS USED FOR CONSTRUCTION SHALL BE KEPT FREE FROM ANY DEBRIS OR TRASH NOT NEEDED FOR CONSTRUCTION. DAILY DEBRIS HAUL SHALL BE IMPLEMENTED.
23. ALL CONSTRUCTION ACTIVITIES THAT RESULT IN DISCHARGE OF MATERIALS, POLLUTED RUNOFF, OR WASTES TO THE BEACH AND/OR THE ADJACENT MARINE ENVIRONMENT ARE PROHIBITED. THE CONTRACTOR SHALL COLLECT, CONTAIN, AND PROPERLY DISPOSE OF ALL CONSTRUCTION LEAKS, DRIPS, BY-PRODUCTS, AND ANY SIMILAR CONTAMINANTS THROUGH THE USE OF CONTAINMENT STRUCTURES OR EQUIVALENT AS NECESSARY (INCLUDING THROUGH THE USE OF COLLECTION DEVICES AND ABSORBENT MATERIALS PLACED BELOW ANY ABOVE-GROUND WORK WHERE SUCH CONTAMINANTS ARE POSSIBLE AND/OR EXPECTED). EQUIPMENT WASHING, REFUELING, AND/OR SERVICING SHALL NOT TAKE PLACE IN AN AREA THAT COULD RESULT IN DISCHARGE TO ADJACENT ENVIRONMENT.
24. CONTAINMENT REQUIREMENTS. PARTICULAR CARE SHALL BE EXERCISED TO PREVENT FOREIGN MATERIALS (E.G., CONSTRUCTION SCRAPS, OUTFALL DISCHARGE, OTHER CHEMICALS, ETC.) FROM ESCAPING THE CONSTRUCTION ZONE.
25. THE CONSTRUCTION SITE AND STAGING AREA SHALL MAINTAIN GOOD CONSTRUCTION HOUSEKEEPING (E.G., CLEAN UP ALL LEAKS, DRIPS, AND OTHER SPILLS IMMEDIATELY; KEEP MATERIALS COVERED AND OUT OF THE RAIN); DISPOSE OF ALL WASTES PROPERLY, PLACE TRASH RECEPTACLES ON SITE FOR THAT PURPOSE, AND COVER OPEN TRASH RECEPTACLES DURING WET WEATHER; REMOVE ALL CONSTRUCTION DEBRIS FROM THE SITE.
26. ANY AND ALL CONSTRUCTION MATERIAL SHALL BE REMOVED FROM THE SITE WITHIN TEN DAYS OF COMPLETION OF CONSTRUCTION AND DISPOSED OF AT AN APPROPRIATE LOCATION.
27. COMPLY WITH ALL APPLICABLE FEDERAL, STATE, REGIONAL, COUNTY, AND MUNICIPAL REQUIREMENTS.
28. SOIL AND MATERIAL STOCKPILES SHALL BE PROPERLY PROTECTED TO MINIMIZE SEDIMENT AND POLLUTANT TRANSPORT FROM THE CONSTRUCTION SITE.
29. SOLID WASTE, SUCH AS TRASH, DISCARDED BUILDING MATERIALS AND DEBRIS, SHALL BE PLACED IN DESIGNATED COLLECTION AREAS OR CONTAINERS. THE CONSTRUCTION SITE SHALL BE CLEARED OF SOLID WASTE DAILY, OR AS NECESSARY, AND REGULAR REMOVAL AND PROPER DISPOSAL SHALL BE ARRANGED.
30. A CONCRETE WASHOUT AREA, (SEE DETAILS PROVIDED) SHALL BE DESIGNATED TO CLEAN CONCRETE TRUCKS AND TOOLS. AT NO TIME SHALL CONCRETE PRODUCTS AND WASTE BE ALLOWED TO ENTER WATERWAYS SUCH AS CREEKS OR STORM DRAINS.
31. PROPER APPLICATION, CLEANING AND STORAGE OF POTENTIALLY HAZARDOUS MATERIALS, SUCH AS PAINTS AND CHEMICALS, SHALL BE CONDUCTED TO PREVENT THE DISCHARGE OF POLLUTANTS.

# CONSTRUCTION WASTE

CONSTRUCTION WASTE MANAGEMENT AND DISPOSAL

1. THE WORK SHALL BE ACCOMPLISHED GIVING REASONABLE CONSIDERATION TO THE MOST ENVIRONMENTALLY CONSCIENTIOUS WORK FEASIBLE WITHIN THE LIMITS OF THE CONSTRUCTION SCHEDULE, CONTRACT SUM, AND AVAILABLE MATERIALS, EQUIPMENT, AND PRODUCTS.
2. PARTICIPATE IN PROMOTING EFFORTS OF OWNER AND THE COMMUNITY TO CONDUCT THE WORK AND PROVIDE WORK PRODUCT IN AN ENERGY-EFFICIENT AND ENVIRONMENTALLY-SENSITIVE MANNER.
3. USE RECYCLED-CONTENT, TOXIC-FREE, AND ENVIRONMENTALLY-SENSITIVE MATERIALS AND EQUIPMENT WHEN POSSIBLE.
4. USE ENVIRONMENTALLY-SENSITIVE PROCEDURES.
5. PROTECT THE ENVIRONMENT, BOTH ON-SITE AND OFF-SITE, DURING DEMOLITION AND CONSTRUCTION OPERATIONS.
6. PREVENT ENVIRONMENTAL POLLUTION AND DAMAGE.
7. EFFECT OPTIMUM CONTROL OF SOLID WASTES BY USE OF RECYCLING AND APPROPRIATE NO LAWFUL LANDFILL DIVERSION METHODS.
8. COMPLY WITH LOCAL AND REGIONAL AIR/WATER QUALITY CONTROL STANDARDS.
9. COMPLY WITH LOCAL AND REGIONAL CONSTRUCTION WASTE AND DEBRIS REGULATIONS.


Craig D. Williams
Architecture
Interiors
Planning
Project
Management

295 Neva Street
Sebastopol, CA
95472

(707) 823-2724
CASpAccess@gmail.com



COPYRIGHT AND CONDITIONAL RIGHT OF USE

Drawings, specifications and all ideas, designs, and arrangements indicated on these drawings and specifications are and shall remain the property of Craig Williams, architect and are intended to be used in connection with this specific project only. No part shall be copied or disclosed to others or otherwise be used in connection with any other work or project other than the specified scope of work for which they have been prepared without the prior written consent of the architect. There shall be no changes or deviations from these drawings or the accompanying specifications without the prior written consent of the Architect - the design professional in responsible charge.

THESE DRAWINGS ARE INSTRUMENTS OF SERVICE THE PROPERTY OF CRAIG D. WILLIAMS, ARCHITECT, COPYRIGHT © 2015-2016

Visual contact with these plans and specifications shall constitute conclusive evidence of acceptance of these restrictions.


CRAIG D. WILLIAMS

LICENSED ARCHITECT
CRAIG DOUGLAS WILLIAMS
No. C026642
REN. 10-31-17
STATE OF CALIFORNIA

08.21.2016

NOT FOR CONSTRUCTION UNLESS SIGNED BY THE ARCHITECT AND STAMPED APPROVED BY THE AUTHORITY HAVING JURISDICTION

AGENCY APPROVALS

ACCESSIBILITY
UPGRADES
IVES POOL
AND POOL HOUSE
7400 WILLOW STREET
SEBASTOPOL, CA

PROJECT NUMBER:
082515.00
DATE:
21 AUGUST, 2016
DRAWN BY:
CW
CHECKED BY:
CW
REVISIONS:

ENVIRONMENTAL
PROTECTION
BEST MANAGEMENT
PRACTICES

**EC1.1**


© THESE DRAWINGS ARE, REMAIN AND ARE THE SOLE PROPERTY OF CRAIG WILLIAMS ARCHITECT. ANY USE WITHOUT WRITTEN CONSENT IS PROHIBITED



Aug 23, 2016 - 2:22pm cwilliams C:\Documents and Settings\cwilliams\Desktop\CLIENTS\SEBASTOPOL CITY\IVES\CD-EC1.1.dwg

# STRUCTURAL OBSERVATION:

THE ARCHITECT HIGHLY RECOMMENDS THAT CONSTRUCTION OBSERVATION BE PERFORMED IN ORDER TO CHECK FOR GENERAL CONFORMANCE WITH DESIGN INTENT. IN THE EVENT CONSTRUCTION OBSERVATION SERVICES ARE NOT REQUESTED IT IS UNDERSTOOD AND AGREED THAT THE WORK PERFORMED BY ARCHITECT IS LIMITED TO THE PREPARATION OF BASIC DESIGN CONCEPTS AND THAT ARCHITECT HAS NO CONTROL WHATSOEVER WITH REGARD TO THE PROPER AND COMPLETE CONSTRUCTION OF THE PROJECT IN CONFORMANCE WITH THE APPROVED DRAWINGS. THE OWNER AND CONTRACTOR, THEIR HEIRS AND ASSIGNS, SHALL INDEMNIFY, HOLD HARMLESS AND DEFEND ARCHITECT FROM ANY AND ALL CLAIMS ARISING OUT OF THE QUALITY OF THE CONSTRUCTED PRODUCT. PLEASE CONTACT OUR OFFICE IN WRITING IF CONSTRUCTION OBSERVATION IS DESIRED.

DESIGN CRITERIA

(FOR STRUCTURAL DESIGN REFERENCE PURPOSES ONLY,
NOT FOR MATERIAL SPECIFICATIONS.

CODES

CALIFORNIA BUILDING CODES AND STANDARDS, 2013 EDITION.

LOADS

BASIC ROOF LIVE LOAD = 20 PSF, 16 PSF AT SLOPE
BASIC FLOOR LIVE LOAD = 40 PSF
WIND PRESSURE MAP LOAD = 80 MPH, EXPOSURE B, I = 1.0
SEISMIC ZONE 4 / SEISMIC DESIGN CATEGORY (SDC) 'D'

MATERIALS

CONCRETE:

CONCRETE ULTIMATE STRENGTH: PER STRUCTURAL SPECIFICATION CONCRETE CONSTRUCTION NOTES BELOW

REINFORCING STEEL YIELD STRENGTH:

FY = 40,000 (AT #4 AND SMALLER)
FY = 60,000 (AT #5 AND LARGER)

STEEL YIELD STRENGTH (UNO):

FY = 36,000 PSI - (SHAPES, PLATES AND BOLTS)
FY = 46,000 PSI - (TUBES)

DOUGLAS FIR WOOD DESIGN STRESSES (UNO):

(2X) FB = 1,250 PSI, FV = 95 PSI
(4X) FB = 1,500 PSI, FV = 95 PSI
(6X) FB = 1,300 PSI, FV = 85 PSI
(GLB) 24F V4 - CAMBER AS NOTED

# GENERAL STRUCTURAL NOTES

1. WORK SHALL CONFORM TO THE LATEST ADOPTED EDITION OF THE UNIFORM BUILDING CODE WITH CALIFORNIA AMENDMENTS (CBC), REFERENCED STANDARDS AND ALL OTHER PUBLICATIONS NOTED HEREIN AND ANY APPLICABLE LOCAL REGULATIONS AND ORDINANCES AND ARE HEREBY INCORPORATED IN THESE CONSTRUCTION DOCUMENTS AS IF FULLY SET FORTH HEREIN. EXCEPT WHERE OTHER NOTES ARE MORE RESTRICTIVE, THE MOST RESTRICTIVE OF APPLICABLE REGULATIONS SHALL APPLY.

2. THE WORK SHALL CONFORM TO AND FIT WITH EXISTING CONDITIONS TO REMAIN. VERIFY ALL DIMENSIONS AND CONDITIONS IN THE FIELD FOR PROPER FIT AND FUNCTION. BUILDING DIMENSIONS, WHEN SHOWN, ARE FOR GENERAL REFERENCE ONLY. SITE VERIFY ALL ACTUAL BUILDING DIMENSIONS. ANY DISCREPANCIES SHALL BE BROUGHT TO THE ATTENTION OF THE ARCHITECT SO CLARIFICATION CAN BE MADE. ALL DIMENSIONS RELATED TO EXISTING CONDITIONS SHALL BE VERIFIED BY THE CONTRACTOR AND SUBMITTED IN WRITING TO THE ARCHITECT FOR REVIEW PRIOR TO COMMENCING WITH WORK.

3. DETAILS NOT SHOWN, NOR DETAILED ON DRAWINGS, NOR CALLED FOR IN THESE NOTES SHALL BE CONSTRUCTED TO SAME SIZE AND CHARACTER AS FOR SIMILAR CONDITIONS WHICH ARE SHOWN, DETAILED OR SPECIFIED.

   DETAILS NOT FULLY SHOWN SHALL BE OF SAME NATURE AS OTHER SIMILAR CONDITIONS. DETAILS SHOWN ON THESE PLANS ARE TYPICAL AND SIMILAR. DETAILS APPLY TO SIMILAR CONDITIONS, SPECIFIC NOTED DETAILS ON THE DRAWINGS TAKE PRECEDENCE OVER GENERAL NOTES AND TYPICAL DETAILS.

   DIMENSIONS SHOWN SHALL TAKE PRECEDENCE OVER SCALE ON THE PLAN SECTIONS AND DETAILS. ANY DISCREPANCIES SHALL BE BROUGHT TO THE IMMEDIATE ATTENTION OF THE ARCHITECT.

4. AT ALL TIMES THE CONTRACTOR SHALL BE SOLELY AND COMPLETELY RESPONSIBLE FOR CONDITIONS AT THE JOB SITE, INCLUDING SAFETY OR PERSONS AND PROPERTY; ALSO DESIGN, ADEQUACY AND SAFETY OF TEMPORARY SHORING, BRACING, FORM WORK, SCAFFOLDING, ERECTION METHODS, ETC. ANY JOB SITE VISIT BY THE ENGINEER IS NOT INTENDED TO INCLUDE REVIEW OF THE ADEQUACY OF THE CONTRACTOR'S SAFETY MEASURES.
5. STRUCTURAL DESIGN OR REVIEW OF TEMPORARY SHORING, ADDITIONAL REINFORCING, BRACING, FORMWORK, SCAFFOLDING, ERECTION METHODS, ETC. REQUIRED FOR PROPER CONSTRUCTION OF THE PROJECT SHALL BE THE RESPONSIBILITY OF THE CONTRACTOR.
6. THE CONTRACTOR WARRANTS UPON COMPLETION OF THE WORK THAT ALL MATERIALS AND WORKMANSHIP ARE IN COMPLIANCE WITH THE DRAWINGS, SPECIFICATIONS AND ALL APPLICABLE CODES. ANY AND ALL CHANGES MUST HAVE THE OWNER'S APPROVAL.
7. REFER TO OTHER SHEETS FOR STANDARD DETAILS OF CONSTRUCTION. REFER TO THE PROJECT SPECIFICATIONS WHERE NOTED HEREIN FOR MATERIALS AND METHODS.
8. ELEVATIONS ON PLANS AND DETAILS "⌖" ARE TO HEIGHTS ABOVE FINISHED GROUND FLOOR ELEVATION REFERENCE 0'-0" (TOP OF CONCRETE).
9. ASSUMED ALLOWED BEARING PRESSURE IS 1000 PSF AT NEW FOUNDATIONS. FOUNDATION DESIGN HAS BEEN PREPARED SIMILAR TO THAT AND A CONTINUATION OF EXISTING CONDITIONS. AN ENGINEERING OR A SOILS REPORT HAS NOT BEEN PERFORMED FOR THE EXISTING BUILDING OR FOR THIS PROJECT AND THE EXISTING BUILDING IS ASSUMED TO BE SOUND AND SOIL BEARING VALUES ARE ASSUMED AS SATISFYING MINIMUM REQUIRED. THE OWNER IS ADVISED THAT AN ENGINEERING REPORT AND SITE SOIL INVESTIGATION MAY REVEAL CONDITIONS NOT APPARENT TO THE ARCHITECT AND THE ARCHITECT ASSUMES NO RESPONSIBILITY FOR EXISTING BUILDING CONDITIONS OR SOIL CONDITIONS AT THIS SITE.
10. REMOVE ALL DEBRIS, SUBSTANDARD SOILS AND ORGANIC MATTER FROM FOUNDATION EXCAVATIONS AND FLATWORK AREAS. NOTIFY IN WRITING ARCHITECT IMMEDIATELY UPON DISCOVERY OF CONDITIONS ADVERSE TO THE COMPLETION OF FOUNDATION AND CONCRETE WORK BEFORE CONTINUING ANY AFFECTED WORK.

11. THE REVIEW OF SHOP DRAWINGS BY THE ARCHITECT IS FOR GENERAL COMPLIANCE WITH THE CONSTRUCTION DOCUMENTS. THE CONTRACTOR SHALL REMAIN RESPONSIBLE FOR ALL ERRORS AND OMISSIONS IN DETAILING, FABRICATION AND CORRECT FITTING OF STRUCTURAL MEMBERS TO EACH OTHER, THE EXISTING BUILDING AND THE SITE, INCLUDING COORDINATION WITH OTHER TRADES, MATERIALS AND CONSTRUCTION SEQUENCES.

12. ALL DETAIL CHANGES DESIRED SHALL BE SUBMITTED TO THE ARCHITECT / ENGINEER IN WRITING FOR THEIR REVIEW AND WRITTEN APPROVAL. SHOP DRAWINGS DO NOT CONSTITUTE CHANGES IN WRITING. ALONG WITH A LETTER STATING THE NATURE, EXTENT, AND EQUIVALENCIES, THE SHOP DRAWINGS SHALL SHOW ALL PROPOSED CHANGES.

    COORDINATE STRUCTURAL DRAWINGS WITH EQUIPMENT DRAWINGS FOR CONSTRUCTION DETAILS.

# (2) STRUCTURAL SPECIFICATIONS - CONCRETE CONSTRUCTION

CONCRETE MATERIALS

1. GENERAL: ALL CONCRETE WORK SHALL BE PERFORMED IN ACCORDANCE WITH THE ACI AND 2013 CBC CODES WITH LATEST ADOPTED CALIFORNIA AMENDMENTS.
2. PORTLAND CEMENT: ASTM C150, TYPE I OR II. FLY ASH: REPLACE UP TO 50% OF PORTLAND CEMENT WITH FLY ASH BY WEIGHT; ASTM C618, TYPE C OR F, SUBJECT TO REQUIREMENTS OF MIX DESIGN AND APPROVAL OF STRUCTURAL ENGINEER. SOURCE FLY ASH AS CLOSE TO CONCRETE SUPPLIER AS POSSIBLE. IN INTERIOR HEATED APPLICATIONS UP TO 50% FLY ASH MAY BE USED. IN EXTERIOR APPLICATIONS AND COLDER WEATHER, MAXIMUM 35%. IN SULFATE ENVIRONMENTS ONLY CLASS F FLY ASH WILL BE PERMITTED AND UNDER NO CIRCUMSTANCES WILL CLASS C FLY ASH BE USED.
3. CONCRETE STRENGTH: CONCRETE SHALL MEET THE FOLLOWING MINIMUM ULTIMATE COMPRESSIVE STRENGTHS AT 28 DAYS:

| LOCATION | MIN. STRENGTH 28 DAYS PSI | AGGREGATE SIZE-INCHES | SLUMP. INCHES | TOLERANCE |
|---|---|---|---|---|
| SLAB ON GRADE | 3000 | 1" X #4 | 3-1/2" | + 1/2" |
| FOUNDATIONS | 3000 | 1" X #4 | 3-1/2" | + 1/2" |

CONCRETE MIX DESIGN AND TESTING SHALL MEET THE REQUIREMENTS OF SECTION 1905 AND 1701 OF THE 2013 CBC, ACI-301-72, CHAPTER 16, AND THESE SPECIFICATIONS.
CONCRETE MIX: CONCRETE SHALL BE HARD ROCK CONCRETE.
CEMENT: 5 SACK MIN. PER CU.YD. PORTLAND CEMENT TYPE I OR II - LOW ALKALINE
FLYASH MAY BE SUBSTITUTED FOR UP TO 25% WEIGHT OF THE DRY CEMENT CONTENT.

WATER: MAX 7 GALLONS CLEAN POTABLE WATER PER SACK OF CEMENT.

AGGREGATE: MAXIMUM SIZE OF 3/4" CRUSHED GRAVEL. AGGREGATES: ASTM C33, UNIFORMLY GRADED. RECYCLED CRUSHED CONCRETE AS AVAILABLE AND APPROVED.

VIBRATION: ALL CONCRETE SHALL BE VIBRATED INTO PLACE WITH MECHANICAL VIBRATOR.

NO MORE THAN 90 MINUTES SHALL LAPSE BETWEEN THE BEGINNING OF CONCRETE BATCHING AND END OF CONCRETE PLACEMENT.

REINFORCING MATERIALS

ALL CONCRETE IS REINFORCED U.N.O. REINFORCING BARS: REINFORCING STEEL SHALL CONFORM TO ASTM A-615, GRADE 60 FOR #5 AND LARGER DEFORMED BARS AND GRADE 40 FOR #4 AND SMALLER AND ALL DOWELS AND TIES. STEEL SHALL BE KEPT CLEAN AND FREE OF SCALE AND RUST. SHALL BE PLACED IN AS LONG OF LENGTHS AS PRACTICABLE. SEE STANDARD DETAILS FOR SPLICE AND LAPS. REINFORCING STEEL TO BE WELDED SHALL CONFORM TO ASTM A706. REINFORCING STEEL SHALL BE SECURELY TIED IN PLACE WITH #16 ANNEALED IRON WIRE.

ELECTRIC WELDED WIRE FABRIC (WWF) SHALL CONFORM WITH ASTM A-185, AND SHALL BE LAPPED 12" MINIMUM.

ALL LAPS SHALL BE CLASS B SPLICE AND 2'-0" MINIMUM UNLESS OTHERWISE NOTED. PROVIDE 1-1/2 INCH MINIMUM CLEARANCE BETWEEN PARALLEL BARS.

MESH: WELDED-WIRE STEEL FABRIC, ASTM C33, MAXIMUM RECYCLED CONTENT AVAILABLE, MINIMUM 50%. IF NOT AVAILABLE, ASTM A185.

ADMIXTURES: NO/LOW VOC, ASTM C494. DO NOT USE CALCIUM CHLORIDE OR ADMIXTURES CONTAINING CALCIUM CHLORIDE.

SLABS AND FLATWORK

FOR SLABS ON GROUND: REINFORCING BARS SHALL BE HELD IN PLACE AT THE CENTER LINE OF THE SLAB BY MEANS OF CONCRETE BLOCKS, BAR CHAIRS, OR OTHER APPROVED METHODS. BARS SHALL NOT BE PULLED UP WITH HOOKS AS CONCRETE IS POURED IN LIEU OF PROPER PLACEMENT.

FLATWORK SHALL HAVE A MEDIUM BROOM FINISH OR OTHER APPROVED SLIP RESISTANT FINISH SUBJECT TO OWNER'S AND ARCHITECT'S APPROVAL. VERIFY PRIOR TO POURING FLATWORK. WALK SURFACES SHALL HAVE A COEFFICIENT OF FRICTION OF 0.6 MINIMUM, TYPICAL.

VAPOR RETARDER: CLEAR 10 MIL THICK POLYETHYLENE SHEET.

JOINT FILLER STRIPS: ASTM D1752, CORK OR SELF-EXPANDING CORK, HOMEX 300 BY HOMASOTE, INC. OR OWNER APPROVED EQUIVALENT.

CURING

CURING: SLABS, BEAMS, WALLS AND OTHER CONCRETE SHALL BE KEPT CONTINUOUSLY WET FOR 48 HOURS AFTER PLACEMENT, AND SHALL BE KEPT DAMP FOR 7 DAYS AFTER PLACEMENT BY COVERING WITH BURLAP OR CARPET KEPT CONTINUOUSLY WETTED, LEAVING FORMS TIGHTLY IN PLACE. SLABS SHALL HAVE CURE/SEALER APPLIED IMMEDIATELY AFTER FINISHING IF OTHER FINISHES ARE NOT AFFECTED. CURE SHALL BE OF A TYPE THAT WILL NOT BE DETRIMENTAL TO SEALERS TO BE APPLIED LATER. WHERE FINISHES WILL NOT BE AFFECTED ,APPLY CURE COMPOUND AT TWICE THE MANUFACTURERS' RATE, WITH A MINIMUM OF (2) COATS AT 90° TO EACH OTHER. CURE COMPOUND MUST BE APPROVED, IN ADVANCE OF USE, BY THE ARCHITECT AND/OR OWNER.

MOISTURE RETAINING COVER: ASTM C171, POLYETHYLENE FILM OR WHITE BURLAP-POLYETHYLENE SHEET. JUTE FABRIC AND USED CARPETS ALSO ACCEPTABLE.

ANCHOR BOLTS

ANCHOR BOLTS - ASTM A36 OR A307.

ALL ANCHORS, DOWELS, BOLTS, INSERTS, AND ANY OTHER HARDWARE TO BE SET IN CONC. OR MASONRY SHALL BE DRILLED AND EPOXY SET IN PROPER ORIENTATION AND POSITION TO INSURE PROPER LOCATION PER PLAN.

SEE EPOXY SET ANCHOR NOTES AND DETAILS.

MISCELLANEOUS

13. PROVIDE 3/4" CHAMFER ON ALL EXPOSED CONCRETE WHERE NOTED, AS OCCURS.
14. PROVIDE 3/4" BULLNOSE AT EXPOSED OPEN EDGES AT CONC. FLATWORK

INSPECTIONS

15. INSPECTION: ANY REGULAR OR SPECIAL INSPECTIONS THAT MAY BE REQUIRED ARE AS NOTED ON PLANS AND AS REQUIRED BY THE JURISDICTION HAVING AUTHORITY. WHEN THE ARCHITECT IS RETAINED BY THE OWNER FOR CONSTRUCTION ADMINISTRATION SERVICES, THE ARCHITECT SHALL BE NOTIFIED A MINIMUM OF TWO (5) BUSINESS DAYS PRIOR TO THE SCHEDULING OF ANY INSPECTION. DEFICIENCIES OR ERRORS IN THE WORK SHALL BE CORRECTED PRIOR TO INSPECTION OF RELATED WORK. INSPECTIONS BY JURISDICTIONAL AGENCIES AND THE ARCHITECT ARE INTENDED TO COMPLIMENT ONE ANOTHER WITH THE MOST RESTRICTIVE DIRECTION FOLLOWED BY THE CONTRACTOR. INSPECTIONS, WHEN REQUESTED, AS PERFORMED BY THE ARCHITECT IS FOR AREAS OR ITEMS FOR WHICH A SPECIFIC INSPECTION IS REQUESTED. ANY INSPECTION OR OBSERVATION OF THE WORK IS FOR GENERAL CONFORMANCE WITH DESIGN INTENT ONLY AND IS NOT INTENDED TO BE COMPREHENSIVE OR EXHAUSTIVE. THE ARCHITECT DOES NOT ASSUME ANY LIABILITY FOR ADDITIONAL REQUIREMENTS THAT MAY BE NECESSARY TO CORRECT THE WORK THAT DOES NOT MEET INSPECTION REQUIREMENTS. ANY REDESIGN AND SUBSEQUENT REINSPECTION AS A RESULT OF DEFICIENCIES OR ERRORS IN THE WORK MAY BE BACK CHARGED TO THE CONTRACTOR.

SPECIAL INSPECTION

16. THE FOLLOWING SPECIAL INSPECTIONS AND TESTS WILL BE REQUIRED AS DETAILED IN THESE PROJECT PLANS, SPECIFICATIONS AND THE CALIFORNIA BUILDING CODE. THESE INSPECTIONS ARE IN ADDITION TO INSPECTIONS PERFORMED BY THE BUILDING INSPECTION DEPARTMENT OF THE AGENCIES HAVING JURISDICTION, DESIGNER OR ENGINEER. THE BUILDING OFFICIAL MAY WAIVE THE REQUIREMENTS FOR THE EMPLOYMENT OF A SPECIAL INSPECTOR IF SHE/HE FINDS THAT THE CONSTRUCTION IS OF A MINOR NATURE. SEE ABOVE FOR ADDITIONAL SPECIAL INSPECTION NOTES.

| | |
|---|---|
| ■ GRADING, EXCAVATION & FILLS | ☐ WELDING |
| ■ REINFORCING STEEL | ■ EPOXY |
| ☐ CONCRETE | ☐ OTHER (______) |

17. INDIVIDUALS PERFORMING SPECIAL INSPECTION DUTIES MUST BE QUALIFIED, AND APPROVED BY THE BUILDING DEPARTMENT PRIOR TO PERFORMING REQUIRED INSPECTIONS. INDIVIDUALS CERTIFIED IN A SPECIAL INSPECTION CATEGORY SHALL BE QUALIFIED INDEPENDENT THIRD PARTY ORGANIZATION, AND INDIVIDUALS EMPLOYED BY A RECOGNIZED TESTING LABORATORY AND UNDER THE DIRECT SUPERVISION OF A CIVIL ENGINEER ARE CONSIDERED QUALIFIED AND APPROVED. VERIFY ALL REQUIREMENTS WITH JURISDICTIONS HAVING AUTHORITY.

18. SPECIAL INSPECTION REPORTS, IF ANY ARE REQUIRED, SHALL BE SUBMITTED TO THE BUILDING INSPECTION DEPARTMENT, ARCHITECT OF RECORD, OWNER AND OTHER DESIGNATED INDIVIDUALS. ALL DISCREPANCIES SHALL BE BROUGHT TO THE IMMEDIATE ATTENTION OF THE CONTRACTOR FOR CORRECTION, THEN, IF UNCORRECTED, TO THE PROPER DESIGN AUTHORITY AND TO THE BUILDING OFFICIAL. THE SPECIAL INSPECTOR SHALL SUBMIT A FINAL SIGNED REPORT STATING WHETHER THE WORK REQUIRING SPECIAL INSPECTION WAS, TO THE BEST OF HIS KNOWLEDGE, IN CONFORMANCE WITH THE APPROVED PLANS AND SPECIFICATIONS AND THE APPLICABLE WORKMANSHIP PROVISION OF THE UNIFORM BUILDING CODE.

# (3) FOUNDATION NOTES

1. REFER TO STANDARD AND GENERAL STRUCTURAL NOTES AND STANDARD DETAILS OF CONSTRUCTION.
2. FOUNDATION DESIGN IS BASED ON THE MINIMUM FOOTING DIMENSIONS AS SET FORTH IN THE 2013 CBC. THE DESIGN IS SUBJECT TO THE SOILS REPORT BY P.J.C. & ASSOCIATES. THE OWNER HAS RETAINED THE SERVICES OF A QUALIFIED SOILS ENGINEER. THE ARCHITECT DOES NOT QUALIFY ANY ASSUMPTIONS MADE NOR ASSUMES ANY LIABILITY FOR ANY ASSUMPTIONS MADE WITH RESPECT TO SOIL, GEOLOGICAL OR HYDROLOGICAL CONDITIONS AT THE SITE OF THE WORK.
3. ALL SITE WORK SHALL CONFORM TO CHAPTERS 18 AND 33 OF THE CBC.
4. ALL FOUNDATIONS SHALL BEAR ON FIRM, UNDISTURBED, NATIVE SOILS OR ENGINEERED FILLS AT OR EXCEEDING DEPTHS SHOWN ON THE DRAWINGS. EXCEPT WHERE OTHERWISE SHOWN, EXCAVATIONS SHALL BE MADE AS NEAR AS POSSIBLE TO THE NEAT LINES REQUIRED BY THE SIZE AND SHAPE OF THE STRUCTURE.
5. REMOVE ALL DELETERIOUS MATERIAL, STUMPS AND ROOTS FROM THE SOIL TO A DEPTH OF AT LEAST 12" BELOW THE SURFACE OF THE GROUND IN THE AREA TO BE OCCUPIED BY THE BUILDING IMPROVEMENTS AND COMPLETELY FROM AREAS OCCUPIED BY FOUNDATIONS OR FOOTINGS. REMOVE ALL WOOD FROM THE AREA BETWEEN THE FOUNDATION AND THE SURROUNDING GROUND INCLUDING AREAS UNDER THE SUB-FLOOR. ALL FOOTING EXCAVATIONS SHALL BE AS NEAT AS PRACTICABLE. OVER-EXCAVATIONS IN DEPTH SHALL BE FILLED WITH CONCRETE, AND IN WIDTH MAY BE FILLED WITH LEAN CONCRETE OR COMPACTED APPROVED BACKFILL. ALL LOOSE SOILS SHALL BE REMOVED FROM EXCAVATIONS PRIOR TO PLACEMENT OF REINFORCING OR CONCRETE. DO NOT ALLOW WATER TO STAND IN TRENCHES. IF BOTTOMS OF TRENCHES BECOME SOFTENED DUE TO RAIN OR OTHER WATER BEFORE CONCRETE IS CAST, EXCAVATE SOFTENED MATERIAL AND REPLACE WITH APPROVED AND PROPERLY COMPACTED BACKFILL OR CONCRETE AT NO COST TO OWNER.
6. FOOTING EXCAVATIONS SHALL BE DEEPENED TO PENETRATE THROUGH WEAK TOPSOIL OR OLD FILL SOILS AND BOTTOM INTO FIRM SUPPORTING NATURAL SOILS.
7. DO NOT UNDERCUT EXISTING FOUNDATIONS. NOTIFY ARCHITECT FOR REVIEW AND POSSIBLE REVISIONS, IF EXISTING FOUNDATION CONDITIONS ARE NOT AS SHOWN.
8. BOTTOM ALL FOOTINGS SALL BE PER SOILS REPORT AND AS DIRECTED BY SOILS ENGINEER, AND NOT LESS THAN 18" MINIMUM BELOW LOWEST ADJACENT UNDISTURBED SOIL SUBGRADE. FOOTINGS SHALL BE PER STRUCTURAL PLANS AND DETAILS AND SHALL HAVE AT A MINIMUM (2) - #4 GRADE 40 CONTINUOUS STEEL BARS TOP AND BOTTOM (TOTAL OF 4)
9. CONCRETE SHALL HAVE A MINIMUM COMPRESSIVE STRENGTH AND SLUMP PER STRUCTURAL SPECIFICATION CONCRETE CONSTRUCTION NOTES, 3500 PSI U.O.N.
10. EXTERIOR CONCRETE SLAB SHALL BE PER DETAILS AND SHALL BE 4" THICK MINIMUM WITH THICKENED EDGES PER DETAILS, WITH #3 GRADE 40 STEEL MIN AT 18"oc E.W. AT MID-SLAB DEPTH.
11. ALL SLABS SHALL BE COMPLETELY SEPARATED FROM STEM WALLS AND FOOTINGS WITH FELT OR MASTIC.
11. ALL SITE WORK, DRAINAGE SYSTEMS AND FOUNDATIONS OR OTHER SOIL CONSIDERATIONS SHALL CONFORM TO THE RECOMMENDATIONS OF THE SITE PLAN AND GENERAL SITE NOTES.
12. CONCRETE SHALL BE THOROUGHLY CONSOLIDATED BY MECHANICAL VIBRATION.
13. REINFORCING STEEL SHALL CLEAN AND FREE FROM RUST AND SCALE AND SHALL BE PLACED IN AS LONG OF LENGTHS AS PRACTICABLE. SEE STANDARD DETAILS FOR SPLICE AND LAPS.
14. MINIMUM REINFORCING STEEL COVER REQUIREMENTS:
    A: CAST AGAINST AND EXPOSED TO EARTH . . 3"
    B: FORMED SURFACES . . . . . . . . . . . . .2"
15. REINFORCING BARS REQUIRING BENDING IN THE FIELD SHALL BE "COLD BENT". BARS AT CORNERS AND INTERSECTIONS SHALL HAVE A MINIMUM RETURN OF 18". ALL BAR SPLICES SHALL HAVE A MINIMUM LAP OF 24", U.O.N.
16. FIELD VERIFY EXISTING CONDITIONS AND REFER TO ARCHITECTURAL DRAWINGS FOR CONSTRUCTION DIMENSIONS, AND LOCATIONS, AND COORDINATE ALL WORK NOT SHOWN ON THE STRUCTURAL DRAWINGS
17. THE CONTRACTOR SHALL REVIEW AND COORDINATE INFORMATION THE DRAWINGS AND REPORT ANY DISCREPANCIES TO THE ARCHITECT PRIOR TO COMMENCING WORK.

# WOOD FRAMING NOTES:

1. REFER TO GENERAL AND STRUCTURAL NOTES AND STANDARD DETAILS OF CONSTRUCTION. ALL CONVENTIONAL LIGHT FRAMING SHALL CONFORM TO CHAPTER 23, 2013 CBC.
2. ALL LUMBER FRAMING LUMBER SHALL BE GRADED PER WCLIB GRADING RULES No. 16.
3. ALL LUMBER FRAMING MEMBERS SHALL BE DOUGLAS FIR (DF) OF THE FOLLOWING GRADES UNLESS OTHERWISE SPECIFICALLY NOTED OTHERWISE NOTED ON THE PLANS:
   LUMBER SHALL BE GRADE MARKED IN ACCORDANCE WITH "STANDARD GRADING AND DRESSING RULES" OF THE WEST COAST LUMBER INSPECTION BUREAU (W.C.L.I.B.).

| MINIMUM GRADES OF SAWN LUMBER (UNLESS NOTED OTHERWISE) | |
|---|---|
| MEMBER SIZE | |
| POSTS AND BEAMS 4x | DOUGLAS FIR, LARCH - No. 1 OR BETTER |
| POSTS AND BEAMS 6x AND LARGER | DOUGLAS FIR, LARCH - No. 1 OR BETTER |
| JOISTS, RAFTERS, PLATES AND 2x6 STUDS | DOUGLAS FIR, LARCH - No. 2 OR BTR. |
| STUDS < 10 FEET | STANDARD OR BETTER |
| STUDS > 10 FEET | No. 2 OR BETTER |
| PLATES AND BLOCKING | No. 1 OR BETTER |

4. BEAMS AND POSTS TO BE FREE OF HEART CENTER (FOHC). ALL WOOD IN CONTACT WITH CONCRETE AND WOOD WITHIN 8" OF GRADE SHALL BE PRESSURE TREATED D.F. (PTDF) AND AS NOTED ON PLANS AND DETAILS. TREAT ALL CUTS, NOTCHES AND HOLES WITH APPROVED PENETRATING COPPER WOOD PRESERVATIVE. TREATMENT SHALL BE IN ACCORDANCE WITH AWPA C15 OR FEDERAL STANDARD TT-W-571.
5. ALL BEAMS AND JOISTS SHALL BE NEAT AND TIGHT SEAT CUT FOR FULL UNIFORM BEARING AT SUPPORTS, BEAM SEATS AND COLUMN CAPS AND JOINTS. HAIRLINE FIT APPROPRIATE FOR FULL VISUAL EXPOSURE.
6. STRUCTURAL WOOD, FOUNDATION SILLS, LEDGERS AND NAILERS IN CONTACT WITH CONCRETE AND WOOD WITHIN 6" OF GRADE SHALL BE D.F. GRADE #1 OR BETTER THAT IS PRESSURE TREATED (PTDF) BEARING THE MARK OF AN APPROVED AGENCY (AWPA C1). PRESERVATIVE TREATMENT SHALL BE PRESERVATIVE TREATMENT BY PRESSURE PROCESS, OR APPROVED EQUIVALENT PER UBC STANDARD 25-12. LUMBER IN CONTACT WITH CONCRETE SHALL BE PRESSURE TREATED DOUGLAS FIR (PTDF) CONFORMING TO CBC 2304.1 AND AWPB LP-2 STANDARD. LUMBER IMBEDDED IN CONCRETE OR EARTH SHALL BE PRESSURE TREATED DOUGLAS FIR (PT DF) CONFORMING TO AWPB LP-22 STANDARD. USE CHROMATED COPPER ARSENATE (CCA) OR AMONIACAL COPPER OXIDE TREATMENT COMPOUNDS OR SIMILAR WATER BORNE CHEMICALS THAT ARE NON-CORROSIVE TO ZINC-COATED TREATMENT COMPOUNDS OR SIMILAR CHEMICALS THAT ARE NON-CORROSIVE TO ZINC-COATED STEEL AND APPROVED FOR USE IN CALIFORNIA. ALL PRESSURE TREATED LUMBER CUT-OFFS AND DEBRIS SHALL BE PROMPLY AND PROPERLY DISPOSED OF OFF SITE.
7. DECAY AND TERMITE PROTECTION FOR ALL WOOD CONSTRUCTION SHALL BE IN CONFORMANCE WITH SECTION 2306, 2013 CBC.
8. IT SHALL BE THE RESPONSIBILITY OF THE CONTRACTOR TO ASSURE THAT THE MAXIMUM MOISTURE CONTENT OF WOOD AT THE TIME OF INSTALLATION SHALL BE NOT MORE THAN 19%; AT LOADING SHALL BE NOT MORE THAN 15%; AT CLOSE-IN SHALL BE NOT MORE THAN 15%. GREEN LUMBER SHOULD BE BRACED AT MIDSPAN, UNTIL DRIED, TO PREVENT SAGGING.
8. THE CONTRACTOR SHALL VERIFY THAT THE MAXIMUM MOISTURE CONTENT OF ALL FRAMED LUMBER AND PLYWOOD (NOT TO EXCEED 19%) MEET THE REQUIREMENTS OF THE SPECIFICATIONS AT THE TIME OF INSTALLATION AND AT CLOSE-IN. THE CONTRACTOR SHALL PROVIDE ALLOWANCE FOR DIFFERENTIAL SHRINKAGE TO MINIMIZE LUMBER SHRINKAGE EFFECTS, INSTALL AND TIGHTEN BOLTS, STRAPS AND TIE DOWN ANCHORS (HOLDOWNS) JUST PRIOR TO COVERING.
9. STRUCTURAL MEMBERS SHALL NO BE NOTCHED, CUT OR OTHERWISE ALTERED FOR DUCTS, PIPES ETC. UNLESS OTHERWISE NOTED OR APPROVED BY THE ARCHITECT. NOTCHES AND HOLES CUT IN SAWN FRAMING SHALL BE PER DETAIL 4/S1.3 UNLESS OTHERWISE NOTED. INCREASE FRAMING SIZES AS NECESSARY TO ACCOMMODATE NOTCHES AND HOLES. DO NOT NOTCH MEMBERS FOR "LET-IN" BRACING.
10. NOTE:ALL (N) EXPOSED FRAMING MEMBERS SHALL BE CAREFULLY SELECTED FOR APPEARANCE. NOTE: MOST LUMBER ON THIS PROJECT WILL BE EXPOSED TO VIEW. SELECT MEMBERS WITH QUALITY GRAIN FIGURE (TIGHT), KNOTS IF ANY SHALL BE FEWEST POSSIBLE (CLEAR PREFERRED) AND SHALL BE TIGHT AND CLOSED. MEMBER SHALL BE FREE OF WANE, CHECKS, TWIST, CRACKS, ETC. MOISTURE CONTENT SHALL BE 15% MAXIMUM. HANDLE EXPOSED MEMBERS CAREFULLY. CAUTION: EXPOSED LUMBER THAT DOES NOT MEET THIS REQUIREMENT IS SUBJECT TO REJECTION AND RECONSTRUCTION MAY BE REQUIRED TO CORRECT.
11. WOOD MEMBERS THAT ARE SPLIT, WARPED, CHECKED, EXCESSIVE WANE, OR HAVE LARGE OR LOOSE KNOTS, OR ARE NOTCHED CUT, DRILLED IN EXCESS OF THAT ALLOWED AND DO NOT FIT TIGHTLY AND TRUE SHALL BE REJECTED. USE ONLY SOUND MATERIAL MEETING OR EXCEEDING THE MINIMUM GRADE SPECIFIED. TOOL AND ASSEMBLE FOR TIGHT FIT AT ALL JOINTS AND CONNECTIONS. HAMMER MARKS ON THE FACE OF WOOD WILL ALSO BE GROUNDS FOR REJECTION. THE INTENT IS A NEAT AND CAREFULLY CONSTRUCTION RESULT THAT EXHIBITS CARE AND QUALITY CRAFTSMANSHIP.
12. CONTRACTOR SHALL EXERCISE CARE WHEN INSTALLING STRUCTURAL CONNECTORS AND FASTENERS SO AS NOT TO SPLIT OR DAMAGE WOOD. ANY MEMBER DAMAGED BY INSTALLATION OF CONNECTOR OR FASTENER SHALL BE REPLACED. WOOD MEMBERS SHALL BE CAREFULLY CUT TO FIT TIGHT. CUTS SHALL BE NEAT AND TRUE. WOOD CONSTRUCTION SHALL BE ERECTED TRUE TO PLANE, LEVEL, PLUMB, AND ALIGNED, FREE OF BOWS AND WARPS. NO ELEMENT SHALL BE OUT OF TRUE MORE THAN 1/4" IN 10 FEET. SET MEMBERS PLUMB, TRUE AND IN CORRECT POSITION.
13. WHEN JOINING NEW CONSTRUCTION TO EXISTING CONSTRUCTION EXERCISE CARE TO CUT, FIT AND PATCH FOR A COMPLETED ASSEMBLY THAT EXHIBITS CONTINUOUS SURFACE PLANES THAT ARE ALIGNED FLUSH FREE FROM JOGS OR PROTRUSIONS UNLESS SPECIFICALLY SHOWN ON THE PLANS. NEW WOOD TRIM SHALL MATCH, ALIGN WITH AND EXTEND EXISTING. EXPOSED JOINTS SHALL BEAR ON SOLID BACKING AND SHALL BE BEVELED.
14. SPECIAL CARE SHALL BE TAKEN TO SELECT, HANDLE, TOOL, ERECT, AND INSTALL ALL FRAMING MATERIALS SO AS TO PROVIDE A FIRST CLASS FRAMING JOB. TWISTED, WARPED, SPLIT, KNOTTY, AND OTHERWISE DELETERIOUS FRAMING MEMBERS SHALL BE REJECTED. KNOTS SHALL BE FEW, TIGHT, AND MAY NOT OCCUPY MORE THAN 20 % OF THE MEMBER SECTION. FRAMING MEMBERS SHALL BE FREE OF WANE AND EXCESSIVE MOLD. FRAMING MEMBERS AND FINISH WOOD THAT ARE EXPOSED SHALL BE SELECTED FOR VISUAL APPEARANCE AND SHALL MEET WITH HIGH AESTHETIC EXPECTATION BY THE ARCHITECT AND OWNER.
15. TOOLED AND CUT JOINTS SHALL BE TIGHT FITTING, TRUE AND PROVIDE SECURE ANCHORAGE AT ALL CONNECTIONS.
16. PLACE ALL LUMBER JOISTS AND BEAMS WITH THE CROWN UP.
17. PRE-DRILL NAIL HOLES WHERE WOOD TENDS TO SPLIT. WHERE NAILING CAUSES WOOD TO SPLIT, REPLACE MEMBER AND PRE-DRILL HOLES.

# PLYWOOD SHEATHING

1. PLYWOOD SHEATHING SHALL BE CD MIN GRADE, EXPOSURE 1 (EXTERIOR RATED), CONFORMING TO VOLUNTARY PRODUCT STANDARD PS-1 OR PS-2 OR APA-108 PERFORMANCE STANDARDS OF THE AMERICAN PLYWOOD ASSOCIATION, UNLESS OTHERWISE NOTED. ALL PLYWOOD TO BE PRESSURE TREATED ACCORDING TO AWPA STANDARD C15 OR TT-W-571 FEDERAL STANDARD.
2. SUPPORTED EDGES OF PLYWOOD SHALL BUTT ALONG THE CENTER OF FRAMING MEMBERS. PLYWOOD SHALL BE STAMPED AND GRADED BY APA, WITH EXTERIOR GLUE (EXPOSURE 1). PANEL THICKNESS, GRADE AND GROUP NUMBER OR SPAN RATING SHALL BE AT LEAST EQUAL TO THAT SHOWN ON DRAWINGS. APPLICATION SHALL BE IN ACCORDANCE WITH APA RECOMMENDATIONS. PLYWOOD SHEETS SHALL BE FASTENED ALONG CENTERLINE OF FRAMING MEMBER WITH NAILING SPACED NOT LESS THAN 3/8" FROM EDGE OF SHEETS. GUN NAILING AND NAILS TO BE APPROVED BY THE ARCHITECT PRIOR TO USE. GALVANIZED OR SUITABLE APPROVED CORROSION RESISTANT PLYWOOD NAILS OF COMMON WIRE WITH FULL ROUND HEADS ARE REQUIRED.
3. TYPICAL FLOOR SHEATHING TO BE 3/4" C-DX (32/16) 5 PLY T&G PLYWOOD GLUED AT WITH A CONTINUOUS BEAD OF SUBFLOOR ADHESIVE AT GROOVES AND AT ALL FRAMING NAILED WITH 10d COMMON NAILS AT 12"oc FIELD AND 6" oc AT PERIMETER EDGES AND AT OPENING EDGES, U.N.O., AT FLOOR PLANE EDGES (PEN), TO FLOOR JOISTS AND TO BLOCKING / FRAMING OVER CRIPPLE WALLS AND GIRDERS. LAY WITH FACE GRAIN PERPENDICULAR TO DECKING. STAGGER SHEETS. PANELS OF THE LARGEST CONTINUOUS SIZE SHALL BE USED - DO NOT USE PATCHWORK APPLICATION.
4. TYPICAL WALL SHEATHING TO BE 1/2" C-DX (15/32) 5 PLY STRUC 1 PLYWOOD NAILED WITH 8d COMMON NAILS AT 12"oc FIELD AND 6" oc PERIMETER EDGE AND AT OPENING EDGES, U.N.O., AT EDGES (PEN), TO TOP AND BOTTOM PLATES, HEADERS (AND WINDOW SILLS), WALL STUDS AND TO ALL BLOCKING / FRAMING. ORIENT SHEETS VERTICALLY. STAGGER SHEETS. PANELS OF THE LARGEST CONTINUOUS SIZE SHALL BE USED - DO NOT USE PATCHWORK APPLICATION.
5. TYPICAL ROOF SHEATHING TO BE 1/2 " C-DX (32/16) 5 PLY PLYWOOD NAILED WITH 10d COMMON NAILS AT 12"oc FIELD AND 6" oc PERIMETER EDGE AND AT OPENING EDGES, U.N.O., AT ROOF DECK EDGES (PEN), TO DECKING AND TO BLOCKING / FRAMING OVER WALLS. LAY WITH FACE GRAIN PERPENDICULAR TO DECKING. STAGGER SHEETS. PROVIDE 1/8" MINIMUM SPACE BETWEEN PLYWOOD EDGES TO ALLOW FOR MOVEMENT WITHOUT PLYWOOD BUCKLING. NO PANELS LESS THAN 24" WIDE SHALL BE USED. ALL PLYWOOD TO BE PRESSURE TREATED ACCORDING TO AWPA STANDARD C15 OR TT-W-571 FEDERAL STANDARD.
6. SHEATHING SHALL CONFORM TO SECTIONS 2312, 2013 CBC.
5. DO NOT OVER DRIVE GUN DRIVEN NAILS. NAIL HEADS SHALL BE FLUSH TO BUT NOT BREAK FACE VENEER. USE OF PNEUMATIC OR POWER DRIVEN NAILS THROUGH PLYWOOD SHALL CONFORM TO THE FOLLOWING: HEADS OF NAILS SHALL BE DRIVEN FLUSH TO (NOT THROUGH) THE SURFACE OF THE FACE VENEER. HEADS DRIVEN THROUGH THE FACE VENEER ARE REJECTABLE. CONTRACTOR SHALL BE RESPONSIBLE FOR RE-NAILING AS DIRECTED BY THE ARCHITECT OR THE FIELD INSPECTOR. IF MORE THAN 40% OF NAILING IS REJECTABLE IN A SHEET, THE WHOLE SHEET IS TO BE REMOVED AND RE-NAILED AT NO EXPENSE TO THE OWNER.

   ALL PLYWOOD NAILS TO BE OF COMMON WIRE WITH FULL ROUND HEADS. NAIL LENGTH TO BE SUFFICIENT TO MEET CBC PENETRATION REQUIREMENTS. NAIL MUST NOT BE OVERDRIVEN.

# METAL CONNECTORS

1. METAL FRAMING CLIPS, HANGERS, ETC. ARE BY SIMPSON STRONG TIE, LATEST CATALOG EDITION, (510) 460-9912. NAILING SHALL BE IN ACCORDANCE WITH THE MANUFACTURER'S INSTRUCTIONS WITH A NAIL PROVIDED FOR EACH PUNCHED HOLE AND/OR BOLTED PER MANUFACTURER'S SPECIFICATIONS AND AS NOTED. ALL METAL, CONNECTORS AND FASTENERS SHALL BE HOT DIPPED GALVANIZED OR STAINLESS STEEL.
2. ALL PREFABRICATED METAL FRAMING CONNECTORS, CLIPS, HANGERS, STRAPS, ETC. SHALL BE MANUFACTURED BY "SIMPSON STRONG TIE COMPANY" OR APPROVED EQUIVALENT. ANY REQUEST FOR SUBSTITUTION SHALL BE ACCOMPANIED BY AN ICC APPROVED STRUCTURAL EQUIVALENCY REPORT. FILL ALL NAIL OR BOLT HOLES IN CONNECTORS PER MANUFACTURER'S SPECIFICATIONS.
4. USE ONLY SIMPSON "N" TYPE NAILS PER MANUFACTURER'S SPECIFICATIONS AND PER NOTE ABOVE. INSTALL AND TIGHTEN CONNECTORS JUST PRIOR TO COVERING WHERE POSSIBLE. MANUFACTURER SUBSTITUTIONS MAY BE ALLOWED WHEN APPROVED BY ENGINEER. SUBMIT A LISTING OF THE SPECIFIED CONNECTOR WITH THE PROPOSED ALTERNATE FOR REVIEW. PROPOSED ALTERNATES SHALL BE ICBO APPROVED WITH CAPACITIES MEETING OR EXCEEDING THE SPECIFIED CONNECTOR.

   ALL SPECIFIED FASTENERS MUST BE INSTALLED ACCORDING TO MANUFACTURERS INSTALLATION INSTRUCTION. USE CORRECT FASTENER QUANTITY, SIZE, TYPE AND FINISH. 16d NAILS USED IN STRUCTURAL CONNECTORS SHALL BE COMMON NAILS (8 GA x 3-1/2"). SINKERS MAY NOT BE SUBSTITUTED AS THEY ARE 9 GA x 3-1/2".

   INSTALL ALL SPECIFIED FASTENERS BEFORE LOADING THE CONNECTION.
5. FRAMING MEMBERS SHALL BEAR COMPLETELY ON THE CONNECTOR SEAT, AND THE GAP BETWEEN MEMBERS SHALL NOT EXCEED 1/8".
6. ALL BOLTED OR NAILED STRAP CONNECTIONS SHALL HAVE AN EQUAL NUMBER OF BOLTS OR NAILS EACH SIDE OF THE SPLICE JOINT. THE FIRST BOLT OR NAIL FROM EACH SIDE OF THE SPLICED OR STRAPPED MEMBER SHALL BE EQUIDISTANT FROM THE SPLICE.
7. ALL STRUCTURAL METAL CONNECTORS SHALL BE HEAVY GALVANIZED WITH A G-90 COATING. HANGERS/CLIPS, STRAPS/POST BRACKETS/FLASHING (ALL HARDWARE) SHALL BE HOT-DIPPED GALVANIZED SUCH AS SIMPSON'S ZMAX LINE OR APPROVED EQUIVALENT.
8. ALL PRE-FABRICATED STRUCTURAL METAL CONNECTORS SHALL HAVE ICBO APPROVAL.
9. STEEL PLATES: ASTM A 36, TO BE BENT OR COLD FORMED PER ASTM A 283, GRADE C.
10. ALL EMBEDDED METAL SHALL BE DOUBLE HOT-DIPPED, GALVANIZED AFTER FABRICATION, U.O.N.
11. NO LOADS OR WELDS SHALL BE PLACED ON EMBEDDED PLATES OR ANGLES FOR A MINIMUM OF 7 DAYS AFTER CASTING.

# BOLTS AND LAG SCREWS

1. ALL BOLTS, NUTS, LAG SCREWS, SCREWS AND OTHER FASTENERS SHALL BE HEAVY HOT DIPPED GALVANIZED OR #304 OR #316 STAINLESS STEEL.
2. BOLTS, NUTS AND WASHERS SHALL BE STANDARD MACHINE BOLTS (MB) CONFORMING TO ASTM A-307WITH SIZES AS SHOWN ON THE PLANS AND DETAILS. WASHERS USED AT TIMBER CONNECTIONS SHALL BE HEAVY TIMBER MALEABLE CAST IRON ROUND OVERSIZED WAHERS (2-1/2 x 1/4"). USE MALLEABLE IRON OR PLATE WASHERS UNDER HEAD AND NUT WHERE BEARING IS AGAINST WOOD. BOLT HOLES IN WOOD SHALL BE 1/16" LARGER THAN THE BOLT DIAMETER. LENGTH OF BOLTS SHALL BE SUCH THAT THE BOLT PROJECTION IS NOT LESS THAN 1/16" NOR MORE THAN 1/2" PAST END OF NUT. HOLES FOR BOLT SHALL NOT BE LOCATED IN OR NEAR LUMBER WITH KNOTS OR CHECKS. ALL BOLTS, ANCHORS, FASTENERS AND WASHERS SHALL BE HOT DIPPED GALVANIZED.
3. BOLT HOLES IN WOOD SHALL BE 1/32" MIN. AND 1/16" MAX. LARGER THAN BOLT SIZES PER NDS-8.1.2.1 (UNO). SLOTTED OR OVERSIZED HOLES WILL NOT BE PERMITTED.
4. HEX HEADS AND NUTS SHALL BE TIGHTENED WHEN PLACED AND RE-TIGHTENED AS WOOD DRIES AND AGAIN BEFORE COMPLETION OF CONSTRUCTION. DO NOT CRUSH WOOD WHEN TIGHTENING.
5. PROVIDE BEARING PLATES / HEAVY WASHERS FOR ALL BOLTS IN BEARING CONTACT WITH WOOD. SIMPSON OR APPROVED EQUIVALENT. WASHERS UNDER HEAD AND NUT WHERE BOLT HEADS WOULD BEAR ON WOOD INCLUDES, WITHOUT LIMITATION, AT ANCHOR BOLTS, STRAPS, TIES, CARRIAGE BOLTS AND OTHER ANCHORS. ALSO PROVIDE WASHERS AT SILL PLATES WITH SLOTTED HOLES. WASHERS SHALL BE HOT DIPPED GALVANIZED. USE 3" SQUARE x 1/4" THICK PLATE WASHERS AT SILL PLATE LOCATIONS, TYPICAL, U.O.N.
6. LAG SCREWS SHALL HAVE LEAD HOLES DRILLED TO 75 % OF THE SHANK DIAMETER WITH A DEPTH EQUAL TO BOLT LENGTH. LEAD HOLES FOR THE AND SHANK LENGTH AT FULL Ø SHANK SHALL BE EQUAL TO THE SHANK EMBEDMENT. LAG SCREWS AND WOOD SCREWS SHALL BE SCREWED AND NOT DRIVEN INTO PLACE.
7. LAG SCREWS REQUIRE PRE-BORING AS FOLLOWS:

| SHANK | LEAD HOLE (A) | SHANK HOLE (B) |
|---|---|---|
| 1/4" | 5/32" | 1/4" |
| 3/8" | 7/32" | 3/8" |
| 1/2" | 5/16" | 1/2" |
| 5/8" | 3/8" | 5/8" |

A. LEAD HOLE DEPTH EQUALS LENGTH
B. SHANK HOLE DEPTH EQUALS SHANK LENGTH
C. DO NOT DRIVE LAG SCREWS WITH HAMMER.
D. SOAP OR LUBRICATE THREADS TO EASE INSTALLATION

SOAP OR LUBRICATE THREADS TO EASE INSTALLATION

LAG BOLTS SHALL BE INSTALLED BY TURNING WITH A WRENCH, NOT BY DRIVING WITH A HAMMER.

ALL LAG BOLTS SHALL BE INSTALLED WITH STANDARD WASHERS.

DEPTH OF CLEARANCE HOLE FOR SHANK SHALL BE EQUAL TO THE LENGTH OF THE UNTHREADED PORTION.

DEPTH OF LEAD HOLE FOR THREADED PORTION SHALL BE EQUAL TO AT LEAST THE LENGTH OF THREADED PORTION.

HOLE DIAMETER FOR THE THREADED PORTION ARE FOR DOUGLAS FIR ONLY. NOTIFY ENGINEER FOR OTHER SPECIES OF WOOD.

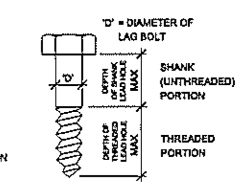


WASHER SCHEDULE

| BOLT DIA. | PLATE WASHER | MALLEABLE IRON WASHER | STANDARD CUT WASHER |
|---|---|---|---|
| 1/2" | 1/4" x 2" SQ. | 1/4" x 2 1/2"Ø | 7/64" x 1 3/8"Ø |
| 5/8" | 1/4" x 2 1/4" SQ. | 5/16" x 2 3/4"Ø | 1/8" x 1 3/4"Ø |
| 3/4" | 5/16" x 2 1/2" SQ. | 7/16" x 3"Ø | 5/32" x 2"Ø |
| 7/8" | 5/16" x 3" SQ. | 7/16" x 3 1/2"Ø | 11/64" x 2 1/4"Ø |
| 1" | 3/8" x 3 1/2" SQ. | 1/2" x 4"Ø | 11/64" x 2 1/2"Ø |
| 1-1/8" | 1/2" x 3 1/2" SQ. | 1/2" x 4 1/2"Ø | 11/64" x 2 3/4"Ø |

24. SPLIT-RING CONNECTORS SHALL BE TECO OR APPROVED EQUIVALENT WITH ICBO EVALUATION REPORT. SPLIT RINGS SHALL BE INSTALLED IN ACCORDANCE WITH MANUFACTURER'S SPECIFICATIONS.
25. CONTRACTOR SHALL EXERCISE CARE WHEN INSTALLING STRUCTURAL CONNECTORS AND FASTENERS SO AS NOT TO SPLIT OR DAMAGE WOOD. ANY MEMBER DAMAGED BY INSTALLATION OF CONNECTOR OR FASTENER SHALL BE REPLACED.

FRAMING HANGERS

26. I-JOISTS HANGERS SHALL BE AS FOLLOWS UNLESS OTHERWISE NOTED ON PLANS:

| | |
|---|---|
| SINGLE 9 1/2" TJI PRO 250 | ITT9 HANGER |
| DOUBLE 9 1/2" TJI PRO 250 | ITT49.5 HANGER |
| SINGLE 1 3/4" X 9 1/2" LVL OR M=L | HU9 HANGER |
| DOUBLE 1 3/4" X 9 1/2" LVL OR M=L | HU410 HANGER |
| SINGLE 11 7/8" TJI PRO 250 | ITT11 HANGER |
| DOUBLE 11 7/8" TJI PRO 250 | ITT411.88 HANGER |
| SINGLE 1 3/4" X 11 7/8" LVL OR M=L | HU11 HANGER |
| DOUBLE 1 3/4" X 11 7/8" LVL OR M=L | HU410 HANGER |
| SINGLE 14" TJI PRO 250 | ITT14 HANGER |
| DOUBLE 14" TJI PRO 250 | ITT414 HANGER |
| SINGLE 1 3/4" X 14" LVL OR M=L | HU14 HANGER |
| DOUBLE 1 3/4" X 14" LVL OR M=L | HU412 HANGER |
| SLOPED OR SKEWED MEMBERS | LSSU HANGER |

27. SAWN LUMBER HANGERS SHALL BE AS FOLLOWS UNLESS OTHERWISE NOTED ON PLANS:

| | |
|---|---|
| SINGLE 2X8 | U26 HANGER |
| DOUBLE 2X8 | U26-2 HANGER |
| SINGLE 2X10 | U210 HANGER |
| DOUBLE 2X10 | U210-2 HANGER |
| SINGLE 2X12 | U210 HANGER |
| DOUBLE 2X12 | U210-2 HANGER |

WHERE A HANGER WITH TABS AWAY FROM MEMBER WILL NOT LAND ON INTERSECTING MEMBER USE A HUC TYPE HANGER U.O.N.


Craig D. Williams
Architecture
Interiors
Planning
Project
Management

295 Neva Street
Sebastopol, CA
95472

(707) 823-2724
CASpAccess@gmail.com



COPYRIGHT AND CONDITIONAL RIGHT OF USE
Drawings, specifications and all ideas, designs, and arrangements indicated on these drawings and specifications are and shall remain the property of Craig Williams, architect and are intended to be used in connection with this specific project only. No part shall be copied or disclosed to others or otherwise be used in connection with any other work or project other than the specified scope of work for which they have been prepared without the prior written consent of the architect. There shall be no changes or deviations from these drawings or the accompanying specifications without the prior written consent of the Architect - the design professional in responsible charge.

THESE DRAWINGS ARE INSTRUMENTS OF SERVICE THE PROPERTY OF CRAIG D. WILLIAMS, ARCHITECT, COPYRIGHT © 2015-2016

Visual contact with these plans and specifications shall constitute conclusive evidence of acceptance of these restrictions.


CRAIG D. WILLIAMS

LICENSED ARCHITECT
CRAIG DOUGLAS WILLIAMS
No. C026642
REN. 10-31-17
STATE OF CALIFORNIA

NOT FOR CONSTRUCTION UNLESS SIGNED BY THE ARCHITECT AND STAMPED APPROVED BY THE AUTHORITY HAVING JURISDICTION

AGENCY APPROVALS

ACCESSIBILITY UPGRADES
IVES POOL
AND POOL HOUSE
7400 WILLOW STREET
SEBASTOPOL, CA

PROJECT NUMBER:

DATE:
21 AUGUST, 2016

DRAWN BY:
CW

CHECKED BY:

REVISIONS:

STANDARD STRUCTURAL NOTES

S0.0


© THESE DRAWINGS ARE INSTRUMENTS OF SERVICE AND ARE THE SOLE PROPERTY OF CRAIG WILLIAMS ARCHITECT; ANY USE WITHOUT WRITTEN CONSENT IS PROHIBITED.

GENERAL

1. ALL WORK SHALL BE IN CONFORMANCE WITH THE REQUIREMENTS, AS AMENDED TO DATE, OF THE 2013 C.B.C. AND ANY OTHER APPLICABLE LOCAL CODES OR ORDINANCES.
2. THE CONTRACTOR SHALL NOTIFY THE ARCHITECT OR THE ENGINEER OF ANY DISCREPANCIES ON THE DRAWINGS REQUIRING REVISION AND CLARIFICATION BEFORE COMMENCEMENT OF WORK. DETAILS NOT SHOWN SHALL BE CONSIDERED TO BE OF THE SAME NATURE AS THOSE SHOWN FOR SIMILAR CONSTRUCTION.
3. DRAWINGS SHALL NOT BE SCALED. ALL WRITTEN DIMENSIONS SHALL GOVERN. ALL DIMENSIONS PERTAINING TO EXISTING CONDITIONS SHALL BE VERIFIED BY THE CONTRACTOR.
4. THE DESIGN AND ERECTION OF TEMPORARY SHORING, BRACING, FORMWORK, SCAFFOLDING, ETC., REQUIRED FOR THE PROJECT SHALL BE THE SOLE RESPONSIBILITY OF THE CONTRACTOR.
5. THE CONTRACT DRAWINGS AND SPECIFICATIONS DO NOT INDICATE THE METHOD OF CONSTRUCTION, BUT REPRESENT THE FINISHED STRUCTURE. THE CONTRACTOR SHALL BE RESPONSIBLE FOR ALL LABOR, MATERIAL, EQUIPMENT, AND SERVICES REQUIRED FOR THE SAFE AND PROPER EXECUTION OF THE CONTRACT DOCUMENTS AND SPECIFICATIONS.

CONCRETE

1. ALL CONCRETE SHALL DEVELOP A MINIMUM DESIGN COMPRESSIVE STRENGTH OF 3000 P.S.I. AT 28 DAYS WITH NO SPECIAL INSPECTION REQUIRED (U.N.O). CONCRETE WITH DESIGN STRENGTH GREATER THAN 3000 P.S.I. SHALL HAVE SPECIAL INSPECTION PER C.B.C. SECTION 1704.
2. CONCRETE MIX DESIGN TO BE PER C.B.C. CHAPTER 19 AND A.C.I. 318. TESTING SHALL CONFORM TO THE REQUIREMENTS OF C.B.C. SECTION 1704.
3. SLABS, BEAMS, WALLS AND OTHER CONCRETE IMMEDIATELY EXPOSED TO WEATHER SHALL BE KEPT CONTINUOUSLY WET FOR 48 HOURS AND SHALL BE KEPT DAMP FOR 7 DAYS AFTER PLACEMENT. SLABS SHALL HAVE CURE OR SEALER APPLIED IMMEDIATELY AFTER FINISHING. CURES AND SEALERS SHALL NOT HAVE DETRIMENTAL EFFECTS UPON EACH OTHER OR UPON FUTURE FINISHES.
4. ALL CONSTRUCTION JOINTS SHALL BE KEYED PER STANDARD DETAILS AND SHALL BE THOROUGHLY CLEANED WITH ALL LAITANCE REMOVED PRIOR TO THE NEXT CONCRETE PLACEMENT.
5. ALL CONCRETE SHALL BE REINFORCED UNLESS NOTED OTHERWISE.

CONCRETE BLOCK

1. CONCRETE BLOCK UNITS SHALL BE GRADE N. CONCRETE BLOCK SHALL HAVE MINIMUM DESIGN COMPRESSIVE STRENGTH OF 1500 P.S.I. WITH SPECIAL INSPECTION (1/2 STRENGTH DESIGN USED WITH NO SPECIAL INSPECTION). BLOCK UNITS ARE TO BE DOUBLE OPEN END WHERE POSSIBLE AND SINGLE OPEN END OTHERWISE.
2. ALL CELLS SHALL BE GROUTED SOLID. MINIMUM DESIGN GROUT COMPRESSIVE STRENGTH SHALL BE 1500 P.S.I. AT 28 DAYS AND THE DESIGN MIX SHALL BE 7 SACK MINIMUM.
3. GROUT SHALL BE PLACED IN ACCORDANCE WITH 2013 C.B.C. SECTION 2103.12. GROUT LIFTS SHALL BE 4'-0" MAX. WITHOUT CLEANOUTS AND 8'-0" MAX. WITH CLEANOUTS. ALL GROUT SHALL BE THOROUGHLY CONSOLIDATED BY MECHANICAL VIBRATION IMMEDIATELY AFTER PLACING. GROUT LIFTS SHALL BE STOPPED 1-1/2" BELOW THE LAST COURSE OF BLOCK.
4. MORTAR SHALL BE TYPE M OR S AND BE PROPORTIONED PER C.B.C. TABLE 2103.8(1)
5. REINFORCING STEEL SHALL BE BENT AND LAPPED AT ALL CORNERS AND INTERSECTIONS. THE MINIMUM HORIZONTAL STEEL LAP SPLICE SHALL BE 24". ALL STEEL SHALL BE POSITIONED AND TIED PRIOR TO GROUTING.

REINFORCING STEEL

1. ALL REINFORCING STEEL SHALL BE DEFORMED AND SHALL CONFORM TO THE REQUIREMENTS OF ASTM A-706. GRADE 60 STEEL SHALL BE USED FOR ALL REINFORCEMENT. TEMPERATURE STEEL BARS MAY GRADE 40, U.N.O.
2. WELDED WIRE FABRIC SHALL CONFORM TO ASTM A-185 WITH A MINIMUM LAP OF 12"
3. REINFORCEMENT BARS SHALL BE FREE OF RUST, DIRT, GREASE, OR ANY OTHER MATERIAL THAT IMPAIRS BONDING TO CONCRETE OR GROUT. ALL REINFORCING BARS ARE TO BE COLD BENT.
4. ALL REINFORCING STEEL LAPS AND SPLICES ARE TO BE PER PLANS AND SPECIFICATIONS.
5. CONCRETE COVER OF REINFORCEMENT FOR CAST IN PLACE CONCRETE SHALL BE AS FOLLOWS:

(A) CONCRETE POURED DIRECTLY AGAINST EARTH ____ 3"
(B) CONCRETE POURED AGAINST FORMS BELOW GRADE ____ 2"
(C) CONCRETE SLABS POURED AGAINST FORMS ____ 1"
(D) CONCRETE COLUMNS AND BEAMS ____ 1-1/2"
(E) CONCRETE WALLS EXPOSED TO WEATHER
1) #6 BARS OR LARGER ____ 2"
2) #5 BARS OR SMALLER ____ 1-1/2"
(F) CONCRETE NOT EXPOSED TO WEATHER ____ 1"

STRUCTURAL STEEL

1. ALL STEEL FABRICATION AND ERECTION SHALL CONFORM TO SPECIFICATIONS PER THE A.I.S.C. "MANUAL OF STEEL CONSTRUCTION." STEEL GRADES SHALL BE AS FOLLOWS:

MOMENT FRAMES ____ ASTM A-572 GRADE 50
SHAPES, PLATES, AND ANCHOR BOLTS ____ ASTM A-36
TUBES ____ ASTM A-500, GRADE B
PIPE ____ ASTM A-53, GRADE B
MACHINE BOLTS ____ ASTM A-325
HIGH STRENGTH BOLTS ____ ASTM A-325

2. BOLT HOLES SHALL BE 1/16" LARGER THAN THE BOLT DIAMETER.
3. WELDING ELECTRODES SHALL MEET AWS REQUIREMENTS. WELDING ELECTRODES SHALL BE E70XX FOR SHIELDED METAL ARC, F7XX-EXXX FOR SUBMERGED ARC, AND E70-X FOR GAS METAL ARC.
4. ALL STRUCTURAL WELDS SHALL BE CERTIFIED BY A TESTING AGENCY ACCEPTABLE TO THE ARCHITECT OR ENGINEER. ALL CERTIFICATIONS SHALL BE SUBMITTED TO THE ARCHITECT OR ENGINEER AND THE BUILDING DEPARTMENT.
5. STRUCTURAL STEEL SHOP DRAWINGS SHALL BE SUBMITTED TO THE ARCHITECT OR THE ENGINEER FOR REVIEW PRIOR TO FABRICATION.
6. HIGH STRENGTH, NON-SHRINK GROUT UNDER COLUMN BASE PLATES SHALL HAVE A MINIMUM STRENGTH OF 5 K.S.I.
7. SELF DRILLING ANCHORS AND DRILLED EXPANSION ANCHORS TO BE PHILLIPS RED HEAD APPROVED EQUALS MAY BE SUBSTITUTED.
8. ALL STEEL MEMBERS SHALL BE GIVEN ONE COAT OF A RUST INHIBITIVE PRIMER PRIOR TO ERECTION.

## SYMBOLS AND ABBREVIATIONS

| | | | | | |
|---|---|---|---|---|---|
| A.B. | ANCHOR BOLT | F.F. | FINISH FLOOR | O/ | OVER |
| A.A. | ATTIC ACCESS | F.O.C. | FACE OF CONCRETE | O.C. OR O/C | ON CENTER |
| A.F.F. | ABOVE FINISH FLOOR | F.O.M. | FACE OF MASONRY | O.D. | OUTSIDE DIAMETER |
| ABV | ABOVE | F.O.P. | FACE OF POST | O.H. | OVERHANG |
| ARCH | ARCHITECTURAL | F.O.R. | FACE OF RAFTER | P.A.F. | POWER ACTIVATED FASTENER |
| AYC | ALASKAN YELLOW CEDAR | F.O.S. | FACE OF STUD | P.E.N. | PLYWOOD EDGE NAILING |
| BLDG | BUILDING | FDN | FOUNDATION | PL | PLATE |
| BM | BEAM | FIN | FINISH | PLYWD, PLY | PLYWOOD |
| BLK | BLOCK | FLR | FLOOR | PSL | PARALLEL STRAND LUMBER |
| BLKG | BLOCKING | FT | FEET OR FOOT | P.T.D.F. | PRESSURE TREATED D.F. |
| BRNG | BEARING | FTG | FOOTING | REQ'D | REQUIRED |
| BRD | BOARD | FRMG | FRAMING | RFTR | RAFTER |
| CAB | CABINET | GA | GAUGE | S.A.D. | SEE ARCHITECTURAL DWGS |
| CO | CABINET OVER | G.I. | GALVANIZED IRON | S.S. | SELECT STRUCTURAL |
| CSK | COUNTERSINK | GAR | GARAGE | SCHD | SCHEDULE |
| CNTR | COUNTER | GDR | GIRDER | S.F. | SUBFLOOR |
| C.B. | CARRIAGE BOLT | GLB. | GLUE LAMINATED BM | S.W. | SHEARWALL |
| C.B.C. | CALIFORNIA BLDG. CODE | G.L.P. | GLUE LAMINATED POST | SIM | SIMILAR |
| C.J. | CONTROL JOINT | GR | GRADE | SPEC | SPECIFICATION |
| CL | CENTERLINE | G.S.M. | GALV SHEET METAL | SQ | SQUARE |
| CLG | CEILING | GYP BRD | GYPSUM WALL BRD | STD | STANDARD |
| C.M.U. | CONC. MASONRY UNIT | HDA "#" | HOLD DOWN | T & B | TOP & BOTTOM |
| COL | COLUMN | HDR | HEADER | T & G | TONGUE & GROOVE |
| CONC | CONCRETE | HORIZ | HORIZONTAL | T.N. | TOENAIL |
| CONN | CONNECTION | HGR | HANGER | T.S. or H.S.S. | TUBE STEEL |
| D.F. | DOUGLAS FIR | HT | HEIGHT | T.S.R. | THREADED STEEL ROD |
| D.J. | DOWEL JOINT | I.D. | INSIDE DIAMETER | TYP | TYPICAL |
| DBL | DOUBLE | IN OR " | INCHES | U.B.C. | UNIFORM BUILDING CODE |
| DIA. | DIAMETER | INSUL | INSULATION | U.O.N. | UNLESS OTHERWISE NOTED |
| DWG | DRAWING(S) | INT | INTERIOR | U.N.O. | UNLESS NOTED OTHERWISE |
| EA | EACH | JST | JOIST | VERT | VERTICAL |
| E.E. | EACH END | K.D. | KILN DRIED | V.I.F. | VERIFY IN FIELD |
| E.W. | EACH WAY | LVL | LAMINATED VENEER LUMBER | W/ | WITH |
| E.N. | EDGE NAIL | M.B. | MACHINE BOLT | W.O | WITHOUT |
| E.S. | EACH SIDE | MAX | MAXIMUM | WT | WEIGHT |
| ELEV | ELEVATION | MCL | MICROLAM | W.W.F. | WELDED WIRE FABRIC |
| ENGR | ENGINEER | MFGR | MANUFACTURER | W.W.M. | WELDED WIRE MESH |
| EQ | EQUAL | MIN | MINIMUM | W.I.C. | WALK IN CLOSET |
| (E) | EXISTING | MISC | MISCELLANEOUS | X | BY |
| EXP | EXPANSION | M.C. | MOISTURE CONTENT | | |
| E.W. | EACH WAY | M.I.W. | MALLEABLE IRON WASHER | | |
| EXT | EXTERIOR | (N) | NEW | | |
| F.A. | FOUNDATION ACCESS | NO | NUMBER | | |
| F.D. | FLOOR DRAIN | N.T.S. | NOT TO SCALE | | |

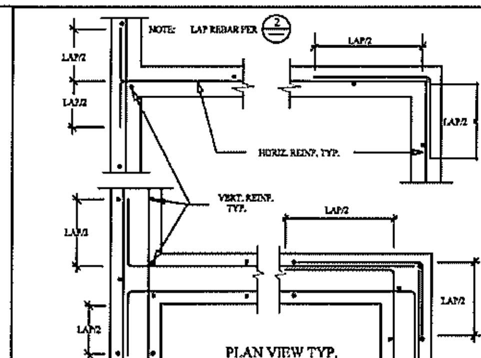


1 STEEL REINFORCING AT FDN CORNERS

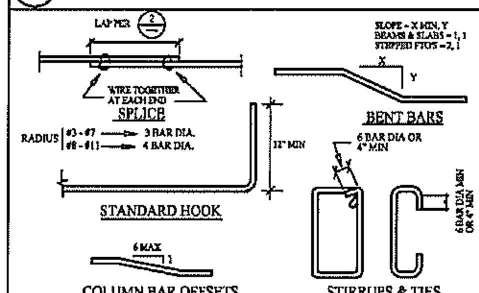


| MINIMUM BAR LAPS FOR REINFORCING STEEL IN CONCRETE (CONC.STRENGTH =3000 PSI MIN.) | |
|---|---|
| GRADE 40 | GRADE 60 |
| #3 BAR - 24" | #6 BAR - 54" |
| #4 BAR - 40" | |
| #5 BAR - 48" | |

| MINIMUM CONCRETE COVER FOR REINFORCEMENT | |
|---|---|
| CAST AGAINST EARTH | 3" |
| CAST AGAINST FORMS ≤ #5 | 1-1/2" |
| CAST AGAINST FORMS ≤ #6 | 2" |
| SLABS | 1" |

NOTE: MINIMUM BAR SPACING: 2" CLEAR OR 1-1/2" x BAR DIAMETER. EXTEND ALL END REINFORCING AS FAR AS POSSIBLE AND END WITH A STANDARD HOOK OR BEND, UNLESS NOTED OTHERWISE.

2 STEEL REINFORCING DETAILS

| MINIMUM BAR LAPS FOR REINFORCING STEEL IN MASONRY | |
|---|---|
| GRADE 40 | GRADE 60 |
| #3 BAR - 24" | #6 BAR - 48" |
| #4 BAR - 30" | #7 BAR - 53" |
| #5 BAR - 36" | #8 BAR - 60" |

FOUNDATIONS

1. ALL SOILS WORK AND SITE GRADING SHALL CONFORM TO THE SPECIFICATIONS OF THE SOILS REPORT IF NOTED BELOW, AND CHAPTER 18 AND APPENDIX J OF THE C.B.C.
2. ALLOWABLE SOIL BEARING PRESSURE IS ASSUMED TO BE ____ P.S.F. AT NEW FOUNDATIONS ONLY. ENGINEER TO VERIFY FOUNDATION EXCAVATION AND PLACEMENT OF FILL PRIOR TO POURING FOOTING CONCRETE.
3. ALL FOUNDATIONS SHALL BEAR ON FIRM UNDISTURBED NATIVE SOILS OR ENGINEERED FILLS AT OR BELOW THOSE DEPTHS INDICATED ON THE DRAWINGS OR SOILS REPORT.
4. ALL FOOTING EXCAVATIONS SHALL BE DUG AS NEAT AND AS CLOSE TO FOOTING DIMENSIONS AS IS PRACTICABLE. ALL FOOTING EXCAVATIONS SHALL BE FREE OF ALL LOOSE FOREIGN MATERIAL AND ANY ORGANIC MATERIAL. OVER-EXCAVATIONS IN FOOTING DEPTH SHALL BE FILLED WITH CONCRETE OR COMPACTED FILL UNLESS NOTED OTHERWISE.
5. SOILS REPORT BY: ____

JOB NO: ____ DATE: ____

3 FOUNDATION NOTES

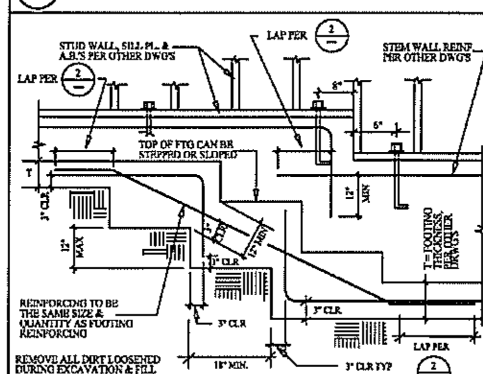


4 STEPPED FOOTING

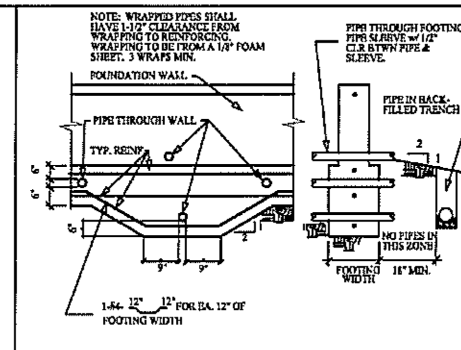


5 PIPES THROUGH FOOTING

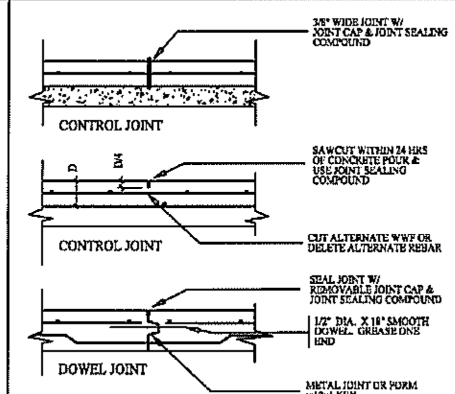


6 CONCRETE JOINT DETAILS

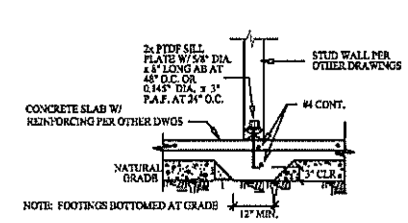


7 FOOTINGS FOR NON-BEARING WALLS

| HOLD DOWN ANCHOR SCHEDULE | | | | | |
|---|---|---|---|---|---|
| PHD | SDS SCREWS | A - BOLT | "X" | "Y" | PL. WASHER |
| HDU2 | 6-1/4" X 2.5" | 5/8" DIA. | 1 5/16" | 12" | 3" SQ x 1/2" |
| HDU4 | 10-1/4" X 2.5" | 5/8" DIA. | 1 5/16" | 12" | 3" SQ x 1/2" |
| HDU5 | 14-1/4" X 2.5" | 5/8" DIA. | 1 5/16" | 12" | 3" SQ x 1/2" |
| HDU8 | 20-1/4" X 2.5" | 7/8" DIA. | 1 3/8" | 15" | 3" SQ x 1/2" |
| HDU11 | 30-1/4" X 2.5" | 1" DIA. | 1 3/8" | 20" | 3" SQ x 1/2" |
| HDU14 | 36-1/4" X 2.5" | 1" DIA. | 1 9/16" | 20" | 3" SQ x 1/2" |

* SIMPSON SSTB ANCHOR BOLTS MAY BE SUBSTITUTED PER MANUFACTURER REQUIREMENTS. STD COUPLINGS MAY BE USED TO EXTEND A-BOLTS.

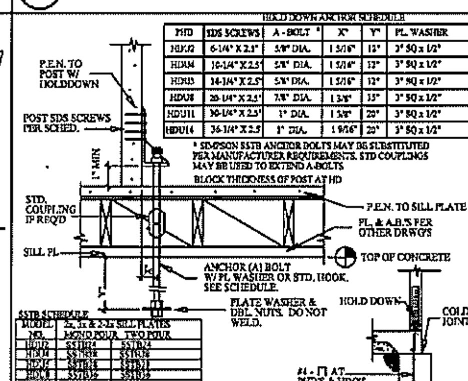


| SSTB SCHEDULE | | |
|---|---|---|
| MODEL NO. | 2x, 3x & 2-2x SILL PLATES MONO POUR | TWO POUR |
| HDU2 | SSTB24 | SSTB24 |
| HDU4 | SSTB28 | SSTB28 |
| HDU5 | SSTB28 | SSTB28 |
| HDU8 | SSTB36 | SSTB36 |
| HDU11 | N/A | N/A |

8 HOLDOWN AT FOUNDATION

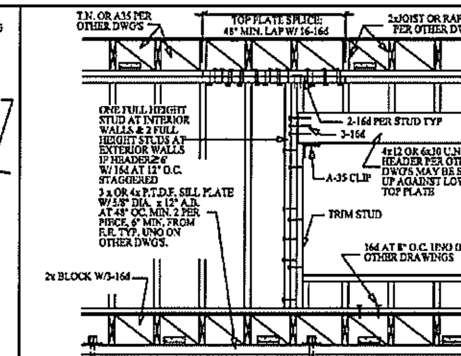


9 WALL FRAMING ELEVATION

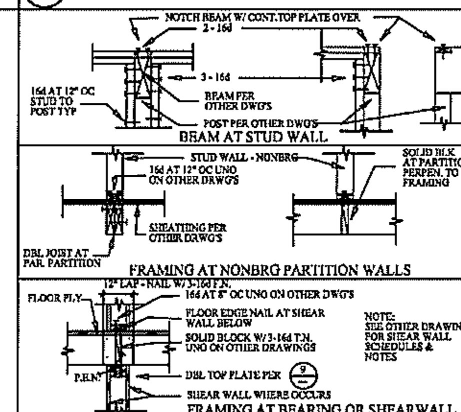


10 FRAMING DETAILS

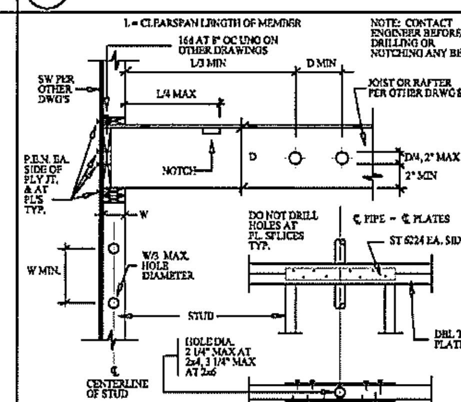


11 HOLES & NOTCHES IN FRAMING

1. MINIMUM GRADES OF DOUGLAS FIR SAWN LUMBER SHALL BE AS FOLLOWS:
a) POST ____ #2
b) BEAMS ____ #2 S DRY (MOISTURE CONTENT NOT TO EXCEED 19%)
c) JOISTS ____ #2 S DRY (MOISTURE CONTENT NOT TO EXCEED 19%)
d) PLATES & 2 x 6 STUDS ____ #2 OR BETTER
e) 2 x 4 STUDS ____ CONSTRUCTION OR BETTER
OTHER GRADES ARE AS NOTED ON DRAWINGS.
2. ALL BEAMS AND POSTS SHALL BE " FREE OF HEART CENTER" (F.O.H.C.)
3. NAILS SHALL BE COMMON WIRE WHERE NAILING IS SPECIFIED ON THE DRAWINGS. OTHERWISE BOX NAILS MAY BE USED PER NAILING SCHEDULE. NAILS AND BOLTS USED IN EXTERIOR APPLICATIONS SHALL BE HOT DIPPED GALVANIZED.
4. METAL FRAMING CLIPS HANGERS, STRAPS, ETC. SHOWN ON DRAWINGS ARE BY SIMPSON STRONG TIE. NAILING OR BOLTING SHALL BE PROVIDED IN EACH PUNCHED HOLE PER MANUFACTURERS SPECIFICATIONS, UNLESS NOTED OTHERWISE.
5. BOLTS SHALL BE UNFINISHED MACHINE BOLTS CONFORMING TO ASTM A-307. LENGTH OF BOLTS SHALL NOT PROJECT LESS THAN 1/16" NOR MORE THAN 1/2" PAST END OF NUT. BOLT HOLES IN WOOD SHALL BE 1/16" LARGER THAN THE BOLT DIAMETER. PROVIDE STD. WASHERS UNDER BOLT HEAD AND NUT WHERE THEY BEAR ON WOOD. USE LOCK WASHERS UNDER NUT & OVER STD WASHER. NUTS TO BE TIGHTENED WHEN PLACED AND RETIGHTENED BEFORE CLOSING IN WALLS OR OTHER CONSTRUCTION.
6. WOOD AGAINST CONCRETE OR CONCRETE BLOCK SHALL BE PRESSURE TREATED DOUGLAS FIR. WOOD POSTS EMBEDDED IN CONCRETE OR EARTH SHALL BE PRESSURE TREATED TO AWPB LP-22 STANDARD.
7. THE NAILING OF FRAMING MEMBERS SHALL CONFORM TO 2013 C.B.C. TABLE 2304.9.1 (SHOWN PARTIALLY ON THIS SHEET AS THE NAILING SCHEDULE.)
8. STRUCTURAL MEMBERS MAY BE CUT, NOTCHED, OR ALTERED FOR UTILITIES IN ACCORDANCE WITH THE STD. DETAIL ON THIS SHEET. ANY ALTERATION NOT SHOWN SHALL REQUIRE THE PRIOR APPROVAL OF THE ARCHITECT OR THE ENGINEER.
9. ALL GLUE-LAMINATED BEAMS SHALL BE D.F. COMBINATION 24F-V4 FOR SIMPLE SPAN BEAMS AND 24F-V8 FOR MULTIPLE SPANS AND CANTILEVERED BEAMS. MINI-LAMS TO BE COMBINATION 20F. BEAMS SHALL BE INDUSTRIAL APPEARANCE, U.N.O. ALL GLUE-LAMINATED BEAMS SHALL BE IN CONFORMANCE WITH CBC STANDARDS.
10. ALL STRUCTURAL SHEATHING USED SHALL BE A.P.A. RATED, A.P.A. GRADE STAMPED, FABRICATED WITH EXTERIOR GLUE AND SHALL CONFORM TO P.S.1-83. PNEUMATIC OR MECHANICAL NAILING AND NAILS/STAPLES SHALL BE APPROVED BY THE ARCHITECT OR ENGINEER PRIOR TO USE AND SHALL BE PLACED FLUSH WITH THE PLYWD. SURFACE. OVERDRIVEN NAILS/STAPLES MAY BE REJECTED AND RENAILING MAY BE REQUIRED. PLYWOOD NAILS SHALL BE OF COMMON WIRE WITH FULL ROUND HEADS AND HAVE A NET PENETRATION OF 1-1/2" FOR 8d AND 1-5/8" FOR 10d.

12 WOOD CONSTRUCTION (CARPENTRY)

PARTIAL NAILING SCHEDULE-CONNECTION*
*SEE TABLE 2304.9.1 IN C.B.C. FOR FULL NAILING SCHEDULE

| | |
|---|---|
| JOIST OR RAFTER AT ALL BEARINGS | 3-8d TOENAIL |
| BLOCKING BETWEEN JOIST OR RAFTER a)TO JOIST OR RAFTER | 3-8d TOENAIL E.S., R.E., OR 3-16d ENDNAIL, E.E. |
| b)TO JOIST OR RAFTER BEARING | 3-16d TOENAIL |
| BLOCKING (2x4) BETWEEN STUDS | 2-8d TOENAIL E.E. OR 2-16d ENDNAIL, E.E. |
| BLOCKING (2x6 OR GREATER) BETWEEN STUDS | 3-8d TOENAIL E.E. OR 3-16d ENDNAIL, E.E. |
| MULTIPLE STUDS - STUD TO STUD | 16d AT 12" o/c FACENAIL |
| STUD TO SOLE PLATE | 2-16d ENDNAIL OR 4-8d TOENAIL |
| STUD TO TOP PLATE | 2-16d ENDNAIL AT 2x4 3-16d E.N.AT 2x6 |
| SOLE PLATE TO JOIST OR BLOCKING | 16d AT 16" o/c FACENAIL |
| TOP PLATES INTERSECTIONS | 2-16d FACENAIL |
| DOUBLED TOP PLATES | 16d FACENAIL AT 12" O.C. |
| RIM JOIST TO TOP PLATES | 8d TOE NAIL AT 6" O.C. |
| TOP PLATE TO STUD | 2-16d ENDNAIL |
| JOIST LAP OVER PARTITIONS | 3-16d FACENAIL |
| CEILING JOISTS TO PARALLEL RAFTERS | 3-16d FACENAIL |

| CEILING JOIST SCHEDULE (U.N.O.) | | |
|---|---|---|
| MAX SPAN | SIZE | SPACING |
| 10'-0" | 2 x 6 | 24" O.C. |
| 12'-0" | 2 x 6 | 16" O.C. |
| 14'-0" | 2 x 10 | 24" O.C. |
| 16'-0" | 2 x 10 | 16" O.C. |
| 18'-6" | 2 x 12 | 24" O.C. |
| 20'-0" | 2 x 12 | 16" O.C. |

13 PARTIAL NAILING AND CEILING JOIST SCHEDULE

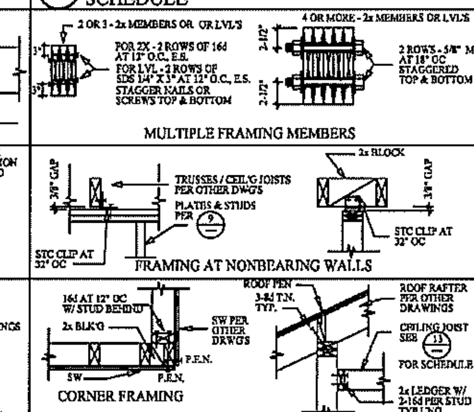


14 FRAMING DETAILS

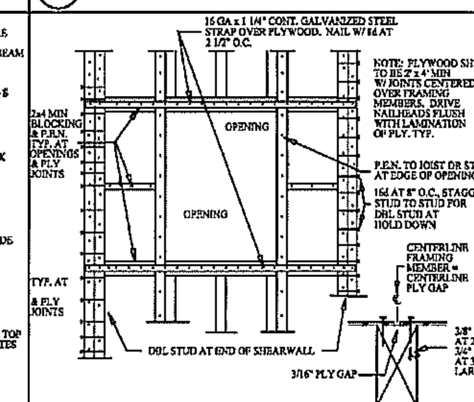


15 OPENING AT DIAPHRAGM OF SHEARWALL

| EPOXY HOLD DOWN BOLT SCHEDULE | | | | | | |
|---|---|---|---|---|---|---|
| PHD | SDS SCREWS | A - BOLT * | "X" | "Z" | "Y" | NOTES |
| HDU2 | 6-1/4" X 2.5" | 5/8" DIA. | 1 5/16" | 3/4" | 12" | [illegible] |
| HDU4 | 10-1/4" X 2.5" | 5/8" DIA. | 1 5/16" | 3/4" | 12" | [illegible] |
| HDU5 | 14-1/4" X 2.5" | 5/8" DIA. | 1 5/16" | 3/4" | 12" | [illegible] |
| HDU8 | 20-1/4" X 2.5" | 7/8" DIA. | 1 3/8" | 1" | 15" | [illegible] |
| HDU11 | 30-1/4" X 2.5" | 1" DIA. | 1 3/8" | 1 1/4" | 20" | [illegible] |
| HDU14 | 36-1/4" X 2.5" | 1" DIA. | 1 1/2" | 1 1/4" | 20" | [illegible] |

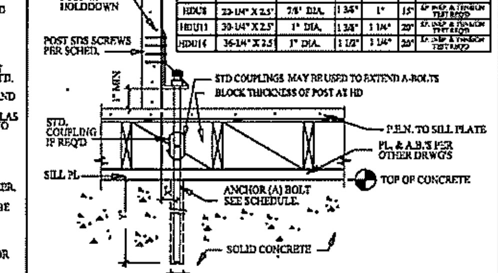


16 EPOXIED HOLD DOWN BOLTS IN CONCRETE


Craig D. Williams
Architecture
Interiors
Planning
Project
Management

295 Neva Street
Sebastopol, CA
95472

(707) 823-2724
CASpAccess@gmail.com



COPYRIGHT AND CONDITIONAL RIGHT OF USE
Drawings, specifications and all ideas, designs, and arrangements indicated on these drawings and specifications are and shall remain the property of Craig Williams, architect and are intended to be used in connection with this specific project only. No part shall be copied or disclosed to others or otherwise be used in connection with any other work or project other than the specified scope of work for which they have been prepared without the prior written consent of the architect. There shall be no changes or deviations from these drawings or the accompanying specifications without the prior written consent of the Architect - the design professional in responsible charge.

THESE DRAWINGS ARE INSTRUMENTS OF SERVICE THE PROPERTY OF CRAIG D. WILLIAMS, ARCHITECT, COPYRIGHT © 2015-2016

Visual contact with these plans and specifications shall constitute conclusive evidence of acceptance of these restrictions.


CRAIG D. WILLIAMS

LICENSED ARCHITECT
CRAIG DOUGLAS WILLIAMS
No. C026642
REN. 10-31-17
STATE OF CALIFORNIA

NOT FOR CONSTRUCTION UNLESS SIGNED BY THE ARCHITECT AND STAMPED APPROVED BY THE AUTHORITY HAVING JURISDICTION

AGENCY APPROVALS

ACCESSIBILITY UPGRADES
IVES POOL
AND POOL HOUSE
7400 WILLOW STREET
SEBASTOPOL, CA

PROJECT NUMBER:

DATE:
21 AUGUST, 2016

DRAWN BY:
CW

CHECKED BY:

REVISIONS:

STANDARD STRUCTURAL NOTES

**S0.1**


© THESE DRAWINGS ARE INSTRUMENTS OF SERVICE AND ARE THE SOLE PROPERTY OF CRAIG WILLIAMS ARCHITECT. ANY USE WITHOUT WRITTEN CONSENT IS PROHIBITED.

# NOTES

**Deferred Submittals**

Deferred Submittals are those parts of the design that are not submitted at the time of the building permit application, but are submitted to the building department later. Deferred submittals are documented designs for structural components to be manufactured "off site". These documented designs known as "shop drawings" are provided to the Engineer of Record, prior to construction and installation, for approval. Upon review of the shop drawings, the Engineer of Record stamps the shop drawings with a reviewed for general conformance with design intent. The contractor then submits the reviewed shop drawings to the building jurisdiction. After approval by the building jurisdiction, the structural components may be manufactured and delivered to the job site for installation.

**Deferred submittal items shall not be manufactured or installed until their design has been approved by both the Engineer of Record and the Building Department.**

The following deferred submittal drawings will be required for this project:

**Shop Drawings for Manufactured Roof Trusses**

For all roof truss design. Shop drawings shall include a plan layout identifying all roof truss types with the dimensioned roof truss profiles keyed to the plan layout and the calculations. The loading criteria shall be designated in the drawings and the calculations. See manufactured truss notes.

**Epoxy Notes**

1. All epoxy connections shall conform to a wet sealed and signed pre-approved detail only.
2. Epoxy shall be Simpson SET or an equivalent approved by the Engineer of Record prior to installation.
3. Holes for the epoxy connections shall be prepared by the following procedure:
   a.) Blow all dust and loose material out of the hole with compressed air.
   b.) Clean inside hole surface with a wire bottle brush that is larger in diameter than the hole.
   c.) Wrap a moistened cloth around a rod and remove all remaining fine dust.
   d.) Repeat procedure a.) through c.) until all surfaces are clean.
4. The epoxy shall be placed into the bottom of the hole per the manufacturer's instructions. Place epoxy onto the bolt and spread it to fill all of the thread gaps prior to inserting the bolt in to the hole. Enough epoxy shall be used such that the residual epoxy spills out above the surface of the concrete when the bolt is placed.
5. Contractor to verify if special inspection is required by the governing building jurisdiction and the building official.
6. If required by the building official, epoxy connections shall have special inspection per C.B.C. chapter 17. The special inspector shall verify:
   a.) Correct hole diameter and depth.
   f.) Holes are clean and the above referenced procedure was followed.
   g.) Correct epoxy is used.
   h.) Epoxy is correctly mixed and installed per manufacturer's specifications.
   i.) Correct diameter and length of bolts or dowels is used.
7. The special inspector shall write a letter of approval to the building department addressing items a.) through i.) listed above.

# SPECIAL INSPECTIONS

The following inspections and tests, as indicated below, will be required as denoted in applicable project plans, specifications, and the California building code. These inspections are in addition to inspections performed by the jurisdictional building department and shall be performed and reported by qualified approved special inspectors as noted below. Special inspection reports shall be submitted to the building department, Architect, and project Engineer of Record. A final inspection report will be required prior to occupancy of the building.

**Grading, Excavation, and Fills**

During construction of all engineered grading procedures, including footing excavations, fills, and fill compactions. All work shall conform to the Soils report by PJC & Associates.
Special inspector shall be the soils engineer of record,
PJC & Associates. Ph: (707)-664-4604

**Foundation and Slab Reinforcing Steel**

Review of all reinforcing steel in footings and slabs.
Inspection of all reinforcing and embedments prior to the closing in of the forms and prior to concrete delivery.
Special inspector shall be the Engineer of Record,
Level Structural Engineering: (707)-829-8439

**Epoxy procedure**

During the procedure for epoxying all bolts and reinforcing.
Procedure is to be as per the epoxy notes.
Epoxy special inspection to be performed by:
Level Structural Engineering: (707)-829-8439

# EPOXY GROUTED ANCHORS

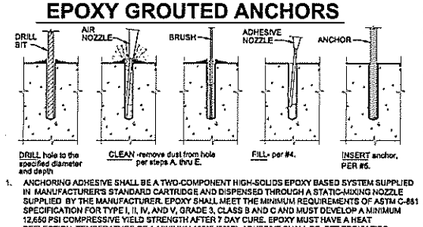


1. ANCHORING ADHESIVE SHALL BE A TWO-COMPONENT HIGH-SOLIDS EPOXY BASED SYSTEM SUPPLIED IN MANUFACTURER'S STANDARD CARTRIDGE AND DISPENSED THROUGH A STATIC-MIXING NOZZLE SUPPLIED BY THE MANUFACTURER. EPOXY SHALL MEET THE MINIMUM REQUIREMENTS OF ASTM C-881 SPECIFICATION FOR TYPE I, II, IV, AND V, GRADE 3, CLASS B AND C AND MUST DEVELOP A MINIMUM 12,650 PSI COMPRESSIVE YIELD STRENGTH AFTER 7 DAY CURE. EPOXY MUST HAVE A HEAT DEFLECTION TEMPERATURE OF A MINIMUM 136°F (58°C). ADHESIVE SHALL BE: SET EPOXY-TIE® ADHESIVE FROM SIMPSON STRONG-TIE, PLEASANTON, CALIFORNIA (ESR-1772); HILTI HIT HY 150 MAX ADHESIVE FROM HILTI, INC., TULSA, OKLAHOMA (ESR-1987); OR APPROVED EQUIVALENT. ANCHORS SHALL BE INSTALLED PER MANUFACTURER'S INSTRUCTIONS AND ENGINEERING REPORTS.
2. DRILL ALL HOLES WITH A ROTARY DRILL (NO IMPACT HAMMERS ALLOWED) TO DEPTHS INDICATED (10" MINIMUM U.O.N.). DRILLED HOLES SHALL BE 1/8" LARGER IN DIAMETER THAN THE DIAMETER OF THE ANCHOR TO BE INSTALLED. DO NOT DRILL THROUGH EXISTING REINFORCING BARS. DRILL NEW HOLES WHERE EXISTING REBAR IS ENCOUNTERED AND DRY PACK THE ABANDONED HOLE. OVERSIZED HOLES ARE NO LONGER EXPECTABLE ( MAXIMUM OVERSIZE TOLERANCE IS 1/8".)
3. SPECIAL INSPECTION IS REQUIRED FOR EPOXY ANCHOR BOLT INSTALLATION.
3. THOROUGHLY CLEAN HOLES TO RECEIVE EPOXY GROUT USING THE FOLLOWING PROCEDURE: (SEE DETAIL ABOVE)
   A. BLOW OUT ALL DUST AND LOOSE MATERIAL WITH OIL-FREE COMPRESSED AIR AT 50 PSI FOR 4 SECONDS MIN. SEE MANUFACTURERS RECOMMENDATIONS FOR AIR HOSE NOZZLE.
   B. CLEAN HOLE SURFACES WITH A CLEAN, STIFF NYLON BRUSH. USE CIRCULAR BRUSH ATTACHED TO A ROTARY DRILL. NOTE: DUST LEFT IN THE HOLE WILL REDUCE THE HOLDING CAPACITY OF THE EPOXY ADHESIVE.
   C. SWAB HOLE SIDES USING A DOWEL WRAPPED IN SLIGHTLY MOIST CLOTH TO REMOVE REMAINING DUST.
   D. BLOW COMPRESSED AIR INTO THE HOLE WITH THE EXTENDED NOZZLE TO REMOVE ALL REMAINING DUST. SEE NOTE 'A' ABOVE.
   E. REPEAT PROCEDURE UNTIL NO DUST REMAINS IN THE HOLE OR ON THE DRILLED SURFACES.
4. INSTALL EPOXY ADHESIVE INTO THE BOTTOM OF THE HOLE TO PREVENT AIR POCKETS. USE THE NOZZLE EQUIPPED GUN AS SPECIFIED BY THE MANUFACTURER SELECTED. FILL HOLE HALFWAY, WITHDRAWING NOZZLE AS HOLE FILLS.
5. ANCHORS MUST BE CLEAN AND OIL FREE. AFTER INSERTING MEASURED AMOUNT OF ACTIVATED EPOXY INTO HOLE IMMEDIATELY INSERT ANCHOR, TURNING SLOWLY UNTIL THE ANCHORS HITS THE BOTTOM OF THE HOLE. EPOXY SHALL FILL THE HOLE TO THE RIM. REMOVE EXCESS DISPLACED EPOXY FROM AROUND HOLE AND ON THREADS OF BAR WITHIN AREA WHERE BOLT WILL BE INSTALLED. DO NOT DISTURB DURING SET TIME.
6. EXERCISE EXTREME CARE TO AVOID DAMAGE TO EXISTING REINFORCING STEEL.
7. TESTING OF THE EPOXY GROUTED BOLTS IN EXISTING CONSTRUCTION SHALL BE AS FOLLOWS:
   BOLTS INSTALLED IN CONCRETE (AT EXISTING SOLID GROUTED C.M.U. WALLS)
   1/2-INCH DIAMETER ALL THREAD ROD: 60 FT-POUND OR 1400 LBS
   5/8-INCH DIAMETER ALL THREAD ROD: 120 FT-POUND OR 2250 LBS
   3/4-INCH DIAMETER ALL THREAD ROD: 150 FT-POUND OR 3400 LBS
   7/8-INCH DIAMETER ALL THREAD ROD: 200 FT-POUND OR 4600 LBS
   TEST ALL BOLTS
   REPLACE BOLTS THAT FAIL AND RE-TEST
7. EXPANSION BOLTS SHALL BE HILTI KWIK BOLT TZ OR SIMPSON STRONG-BOLT. EXPANSION BOLTS SHALL BE INSTALLED IN STRICT CONFORMANCE WITH MANUFACTURER'S RECOMMENDATIONS. DO NOT CUT REINFORCING IN NEW OR EXISTING CONCRETE DURING INSTALLATION. EPOXY ADHESIVE SHALL BE HILTI HIT-RE 500-SD. EPOXY ADHESIVE SHALL BE INSTALLED IN STRICT CONFORMANCE WITH MANUFACTURER'S RECOMMENDATIONS. DO NOT CUT REINFORCING IN NEW OR EXISTING CONCRETE DURING INSTALLATION.

**Cold Formed Steel (Light Gauge) Framing**

A. Material
   1. Tables, Schedules, and callouts on these drawings are based on products from the Steel Stud Manufacturing Association (SSMA) specification booklet corresponding to I.C.B.O. ER No. 4943P. All substitutions shall have at least the same structural properties and be submitted to the Architect for approval.
   2. Framing members and all accessories shall conform to the following, u.n.o.:
      a. 16 Ga. and heavier, ASTM A446, Fy = 50 k.s.i. min.
      b. 18 Ga. and lighter, ASTM A446, Fy = 33 k.s.i. min.
      c. Double L headers shall have a yield strength of 50 k.s.i. regardless of the gauge specified.
   3. All steel framing components shall be grade stamped or be certified in writing by the manufacturer to assure correct steel grade and shall have a galvanized finish conforming to ASTM A525, G60 coating.
B. Connections
   1. Connections to framing shall be screwed, bolted, welded, or pinned as indicated on the drawings.
   2. Welded connections shall be made using arc welding or resistance welding methods. All welding shall be performed in accordance with the latest recommendations of the AWS C1.3 and AWS D1.3. Protection of the weld area after welding shall be accomplished using a zinc based galvanizing repair paint.
   3. All light gauge to light gauge member connections shall be made with No. 10-16 self-tapping or self-drilling galvanized screws. Screw points shall conform to ASTM C-954. Screw lengths shall be a minimum of ½" longer than the sum of the steel thicknesses being connected. A minimum of 3 steel threads shall be exposed beyond the connected steel members. Screw heads shall be either pan head, wafer head, or hex washer head. Screws shall be driven at 90 degrees to the connection surface. The underside of the screw head shall be in full contact with and flush to the thinner member being connected. Screws shall not be spaced closer than (3) three nominal screw diameters (i.e. ¾" for No. 10 screws) to each other or to any edge of a steel sheet or accessory being connected.
   4. All plywood to steel member connections shall be made with 0.120" dia. pneumatically driven, hardened and knurled steel pins. Steel pins shall be I.C.B.O. approved and have a minimum head dia. of ¼" and shall penetrate the steel framing a minimum of ½". Fasteners shall be placed in (1) shot such that the head of the pin is flush with the surface of the plywood. Fasteners shall be driven with (1) one shot. Hammering an already placed pin is not allowed. Underdriven pins shall be removed and another fastener installed. Overdriven fasteners shall require another replacement fastener located at a minimum (3) three diameter distance.
   5. Metal framing connectors shown on the drawings are by Simpson Strong-Tie u.n.o. Screws shall be placed in every punched connector hole per manufacturer's specifications, u.n.o.
   6. All plywood diaphragm connections to light gauge steel framing shall be made with either of the following:
      a. No. 10-16 screws.
      b. 0.120" dia. pneumatically driven steel pins.

**Partition Wall Framing**

1. See structural detail sheets for standard framing details and specifications.
2. All partition wall framing shall be 350S162-43 at 16" o.c., U.N.O.
3. Top and bottom tracks shall be 350T150-43 for 3-1/2" thick walls.
4. Bottom tracks shall be spliced per detail 1/S1 and shall be fastened to the foundation with Hilti X-ZF S2 P8S36 powder actuated fasteners, PAF, (0.145" dia.) located within 6" of each stud or 16" o.c. maximum spacing. Fasteners shall not be spaced closer than 4" from each other or 3" from the edge of the supporting concrete.
5. Steel studs shall be attached to top and bottom tracks with a minimum 1 screw on each side. Screw each stud flange to the track flange, typical. Studs are to be seated tightly within the track with a maximum of 1/16" clearance from the end of the stud to the face of the track web.
6. Top and bottom tracks shall not be spliced within a shear panel.
7. Bottom track shall be fastened to the foundation with anchor bolts per the manufacturer's specifications. See plans and shear panel schedule.
8. Top tracks shall be spliced per plan locations, collector schedule and detail 5/S1.
9. Wall stud/column webs shall be aligned with supported framing webs above. Maximum offset allowed is ¾". Typical, u.n.o.
10. Jamb members supporting window and door headers shall be carried down all walls to the foundation below
11. Headers shall be either double L, back to back, or box headers. See details and header schedule for header sizes and types.
12. Double studs used as columns shall be fastened to each other with two (2) No. 10 screws at 16" o.c. and 6" from each end of the double stud. The screws shall be placed within 1" of the flanges.
13. Interior and exterior sheathing shall be attached to each stud with screws at 7" o.c. maximum spacing.
14. All wall studs shall be properly braced against rotation about the weak axis prior to loading. Unfinished interior and exterior studs shall be horizontally braced per applicable details this sheet at a maximum of 4'-0" o.c. vertically. Provide a positive connection to each stud.

**Foundation Notes**

1. The soils report by PJC & Associates contains specifications and recommendations that are part of these contract documents. See soils report for information not contained herein.
2. Prior to the Contractor requesting a jurisdictional foundation inspection, the Soils Engineer shall advise the building official in writing that:
   a.) The building excavation and building pad are prepared in accordance with the soils report.
   b.) The foundation grading, forming, filling, and compaction comply with the soils report and the approved plans.
   c.) The drainage systems are in accordance with the soils report.
3. All soils work and site grading shall conform to the specifications of the soils report and chapter 18 of the 2013 C.B.C.
4. Building dimensions are shown for general reference only. See architectural drawings for actual building dimensions. Any discrepancies shall be reported to the Architect for clarification. All dimensions relating to existing conditions shall be checked and verified by the Contractor prior to construction.
5. See Architectural, Mechanical, Electrical, and Civil drawings for locations of all foundation penetrations.
6. Ground surface areas surrounding footings shall be sloped to drain away from the foundation. A foundation drain shall be placed around the exterior perimeter footings. For drainage, see plan drawings, details, notes, and the soils report. Non-perforated piped outlets shall be provided to allow drainage of all collected water from the structure beyond all foundations to a location approved by the Soils Engineer.
7. All footings shall be located at a depth as described by the Soils Engineer during digging.
8. All footing excavations shall be dug as neat and as close to foundation dimensions as is practicable. Footing excavations shall be free of all loose soils, organic, and foreign material. Over excavations in footing depths shall be filled with concrete.
9. All footing concrete shall achieve 3000 p.s.i. at 28 day and does not need to be specially inspected during the pour.
10. The tops and bottoms of footings shall not be sloped. The tops and bottoms of all footings shall be level.
11. All footing "shiplaps" or cold joints that result from delayed successive concrete pours shall be vertically oriented and shall be formed and keyed.
12. Footing and stem wall widths shall be constantly maintained from the top to the bottom of the plumb concrete forms. Excess concrete spillage or slough shall be removed from the base of the forms before the concrete hardens.
13. Holes, notches, and offsets are not allowed in footings or stem walls, unless specifically designed and detailed by the Engineer of Record.
14. Anchor bolts, nuts, washers, and all steel connectors in direct contact with pressure treated wood contact shall be of a compatible material or coated surface. Hot dipped galvanized, stainless steel, or Simpson's ZMAX coated hardware are acceptable. Any other material or coating must be approved in writing by the Engineer of Record prior to installation.
15. Reinforcing, anchor bolts, dobies, embedments, and inserts shall be rigidly set in place prior to placing concrete.
16. Concrete dobies are not allowed for the slabs. Use plastic chair style dobies.
17. All slabs shall be 4" thick, reinforced with #4 grade 60 bars at 16" o.c. each way, 2" off the bottom of the slab. The slab shall be located over 2" sand and over 4" free draining rock (#4 sieve x ¾" gravel). Embed a 10 mil. visquene vapor barrier in the sand layer to protect it from damage during the concrete pour and wet the sand prior to pouring the concrete for even concrete curing.
18. Concrete surfaces shall be kept wet continuously for 7 days after concrete placement or shall be sprayed with a curing compound that is compatible with, and allows adequate bonding of the finish materials to the slab.
19. Concrete mix for the foundation footings shall have the cement component of the mix reduced 20% by the addition of fly ash.
20. Fly ash used shall conform to ASTM C 618 and AASHTO M 295.
21. Provide control joints (C.J.) as indicated on plans and in locations as required to prevent concrete shrinkage cracking.

**Masonry Notes**

1. Concrete masonry unit (CMU) size shall be 8" x 8" x 16", U.N.O. and shall be double open end where possible, and single open end otherwise. Masonry shall be set as a common running bond.
2. All CMU to be grouted solid. Grout to have a minimum compressive strength at 28 days of 2500 p.s.i. Maximum slump for grout shall be 6".
3. Inverted bond units shall be used for the first course. Grout shall be vibrated to fill all cells solidly. Cleanouts at the bottom course/concrete footing interface shall be provided for each grout filled cell to verify grout placement quality.
4. Vertical and horizontal reinforcement shall be #4 Grade 860 at 24" o.c. each way, U.N.O. See plan details and schedule call outs otherwise.
   Bar laps shall be per the lap splice schedule on the structural standard detail sheet, S1, U.N.O.
5. Minimum clearance for reinforcing steel shall be ½" from the face of the CMU to the rebar and 1" between parallel rebars.
6. Rebar in footings or grade beams shall doweled up to match and lap to vertical wall reinforcement per the masonry lap schedule length. All vertical reinforcing shall be tied to the foundation dowels at each end of the lap.
7. Vertical reinforcement shall be positioned at the centerline of the wall, U.N.O. in details.
8. All wall corner cells and end cells shall have vertical reinforcement.
   All horizontal reinforcement shall be set in bond beam units. Provide continuous bond courses through corners and intersections by notching the CMU face shells.
9. Bend and lap horizontal reinforcing at corners and intersections. Corner laps shall be a minimum of 40 bar diameters, U.N.O.
10. All horizontal reinforcement at wall ends shall terminate in a 40 bar diameter length, 90 degree vertical hook.
11. Reinforcing, anchor bolts, embedments, and inserts shall be rigidly set in place prior to placing grout.
12. All bolts in masonry shall have at least 1 inch of grout between the bolt shaft and the masonry face shell.
13. Special inspection of masonry is not required.

**Roof Framing**

1. See sheet S-1 and S1.1 for standard framing details and specifications.
2. All rafters to be 600S162-43 at 16" o.c., U.N.O.
3. Provide web stiffeners at all points of bearing, U.N.O.
4. All web stiffeners to be a 4" long 350S162-33 with a minimum of 6-No. 10 screws.
5. All rim and ledger track to be 600T150-43, U.N.O.
6. All roof sheathing to be pressure treated ½" T & G (48/24) A.P.A. rated exposure 1 plywood. Glue and screw or nail with steel pins (described in note no. 4 under "Connections") at 6" o.c. at all edges and to all drag struts, joists, and blocking over walls and at 10" o.c. to intermediate supports. Lay plywood with face grain perpendicular to framing and stagger sheets. Leave a gap of 1/8" between sheets in both directions.
7. All roof openings to occur between rafters, U.N.O.
8. Use Simpson S/JCT8-14 hangers or equivalent for all joist to flush "red steel" beam connections. S/JCT8-14 hangers to be field welded with 1/8" fillet x 2-1/2" long on each side of the hanger top flange. Hangers supported by light gauge steel beams may be screwed to the beam. Typical.

Screw horizontal straps over floor plywood where practicable. Nailing of horizontal straps is not allowed. Horizontal straps shall be 3" wide x 18 Ga. with 2 rows of No. 10 screws at 8" o.c. with 2 screws per each framing member. Continuous steel backing under ply may be a notched 350T125-54 track or matching steel strap.

**Manufactured Wood Members**

1. Parallam Lumber (PSL) shall be manufactured by Trusa Joist MacMillan. All PSL shall be 2.0E DF Parallam and have the following structural properties:
   E = 2,000,000 p.s.i  Fb = 2900 p.s.i.
   Fv = 290 p.s.i.
2. Laminated Veneer Lumber or Rigidlam, (LVL) shall be manufactured by Roseburg Forest Products. All LVL shall have the following structural properties: E = 2,000,000 p.s.i  Fb = 2900 p.s.i.
   Fv = 285 p.s.i.
3. All Glue Laminated Beams (GLB) protected from the weather shall be Douglas Fir (DF) combination 24F-V4 for simple span beams and 24F-V8 for multiple spans and cantilevered beams. GLB's shall have no camber unless called out otherwise. See plans for beam size and specified camber.
   All GLB's exposed to the weather shall be Alaskan Cedar (AC) combination 20F-V12 with an allowable bending capacity of 2000 p.s.i. for the compression zone stressed in tension for all multiple spans and cantilevered beams.

**Roof Framing Notes**

1. Bearing walls and lateral resisting walls are shown shaded on the structural framing plans.
2. Headers, beams, posts, rafters, and other framing members shall not be notched, unless specifically detailed. See plans.
3. For roof slopes less than 4:12, roof sheathing shall be 3/4" (48/24) T&G A.P.A. rated exposure 1 plywood. Nail with 10d G.I. at 6"o.c. at all ply edges to rafters or blocking over walls and/or beams and at 12"o.c. at intermediate supports. Lay with face grain perpendicular to supporting framing and stagger the sheets.
4. Adjacent plywood sheets shall be assembled by a distance of 1/8".
5. All exterior roof openings shall occur between the rafters, U.N.O.
6. Hang rafters to beams with Simpson LSSU hangers, U.N.O.
7. All mechanical unit's weight, location, and method of support shall be verified by the Engineer of Record prior to placement on the roof.
8. Nail horizontal straps over roof plywood where practicable.
9. Opposing rafter or truss pairs shall be strapped across supporting beams with Simpson LSTA 24 straps. Use galvanized nails. See plans.

**Manufactured Roof Truss Notes**

1. For truss shapes, dimensions, and other requirements, see the architectural drawings.
2. Manufactured roof truss design loads:
   a.) Top chord
      Dead Load 8 P.S.F.
      Live Load 20 P.S.F.
   b.) Bottom chord
      Dead Load 6 P.S.F.
      Live Load 10 P.S.F. (does not act simultaneously with other applied live loads)
3. The location, weight, and method of attachment of all mechanical units and fixtures shall be included in the design of the trusses by the truss manufacturer and shall be verified by the Architect and Engineer of Record.
4. Truss manufacturer shall design building and trusses for roof dead and live loads in combination with lateral loads (wind or seismic)
   acting perpendicular to the truss.
5. Truss manufacturer is responsible for all truss to truss connections,
   truss attachments to supporting members, and all truss bracing.
6. All trusses shall be designed to meet dead plus live loads such that total horizontal deflections and the total vertical deflections at midspan do not exceed 3/8". Truss manufacturer shall include deflection calculations with the truss shop drawing submittal.
7. Truss shop drawings are a deferred submittal. See deferred submittal notes for requirements.
8. Contractor shall submit all truss shop drawings sealed and signed by a currently registered California Engineer to the Engineer of Record for review and approval. The Engineer of Record then reviews and approves the shop drawings as conforming to the design intent. The Contractor shall then submit the approved shop drawings to the building department for approval, prior to fabrication.
9. Truss manufacturer shall submit proof of in-plant inspection per CBC chapter 23, division III to the building department with the submittals as referenced above.
10. All bearing walls are shown shaded on the structural plans. The only locations that the trusses may bear are upon these shaded walls.
11. 2x blocking shall be provided and placed between the trusses at all roof ridge, hip, and valley locations. Typical, U.N.O.
12. All trusses labeled "collector truss" on the roof framing plan shall be designed to transfer a lateral load of 250 p.l.f. from the top chord to the bottom chord through the web members in addition to the gravity loads listed above.

MINIMUM BAR LAPS FOR REINFORCING STEEL
CONCRETE STRENGTH: 3000 PSI OR LESS
(STAGGER SPLICES)

| * MIN. BAR LAPS FOR REINF. STEEL | | |
|---|---|---|
| BAR SIZE | LAP FOR TOP BARS | LAP FOR OTHER BARS |
| #3 | 24" | 24" |
| #4 | 30" | 24" |
| #5 | 38" | 30" |
| #6 | 46" | 36" |
| #7 | 53" | 42" |
| #8 | 59" | 63" |
| #9 | 113" | 89" |
| #10 | 143" | 111" |
| #11 | 176" | 136" |

* REBAR LAP LENGTHS ASSUMES MINIMUM CLEAR COVER AS SHOWN AND CLEAR SPACING OF BARS IS AT LEAST 3x BAR DIAMETER (2" MIN.).
* *TOP BARS ARE HORIZONTAL BARS SO PLACED THAT MORE THAN 12" OF FRESH CONCRETE IS CAST IN THE MEMBER BELOW THE SPLICE.

MINIMUM BAR SPACING (INCLUDING LAPS): 2" CLR OR 1-1/2 x BAR DIAMETER
1.5 x LAP EQUALS 150% LAP LENGTH REQUIRED

| CONCRETE COVER FOR REINFORCING STEEL | 'CLR' |
|---|---|
| CAST AGAINST EARTH OR GRADE | 3" |
| EXPOSED TO EARTH (FORMED) OR WEATHER #5 AND SMALLER<br>#6 AND LARGER | 1-1/2"<br>2" |
| NOT EXPOSED TO EARTH OR WEATHER | 1" |
| SLABS-FROM TOP OF CONC | 2" |

ALL REINFORCING BARS SHALL EXTEND AS FAR AS POSSIBLE AND END IN A STANDARD 90° or 180° HOOK UNLESS DETAILED OTHERWISE

## 1 REINFORCING SPECIFICATIONS

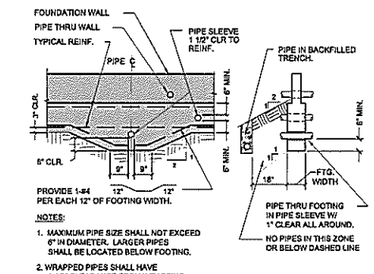


NOTES:
1. MAXIMUM PIPE SIZE SHALL NOT EXCEED 6" IN DIAMETER. LARGER PIPES SHALL BE LOCATED BELOW FOOTING.
2. WRAPPED PIPES SHALL HAVE 1 1/2" CLEARANCE FROM WRAPPING TO REINFORCING. WRAPPING TO BE FROM A 1/8" FOAM SHEET, 3 WRAPS MIN.

## 2 PIPE THROUGH FOOTING DETAILS

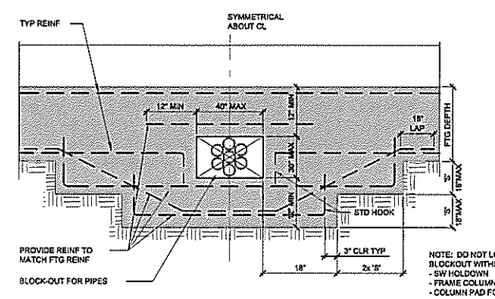


## 3 FOUNDATION BLOCKOUT

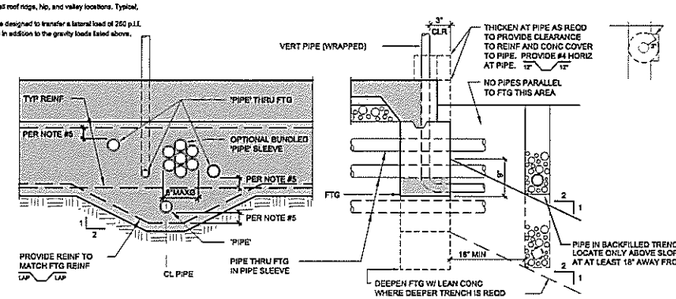


NOTES:
1. SLEEVES SHALL BE PVC, I.D. TO BE 2" LARGER THAN PIPE O.D.
2. PLUMBING EMBEDDED IN CONC TO BE PROVIDED W/FLEXIBLE COUPLINGS AT ENTRY AND EXIT POINTS.
3. 'PIPE' = ANY PENETRATION THRU FOUNDATION TO ALLOW FOR 1" OF MOTION IN ANY DIRECTION.
4. NO 'PIPE' TO RUN PARALLEL IN FOOTINGS.
5. WRAPPED PIPES SHALL HAVE 1-1/2" CLEAR FROM WRAPPING TO REINFORCING. SLEEVED PIPES SHALL HAVE 1-1/2" MINIMUM CLEAR TO REINFORCING. WRAP W/ 1/4" FOAM SHEET, 3 LAYERS MIN. SLEEVED PIPES PER NOTES.
6. CLEARANCE BETWEEN 'PIPES' TO BE 8" MIN TYP. GROUPS OF PIPES MAY BE BUNDLED AS SHOWN OR USE DETAIL 15 FOR BLOCK-OUT.

## 4 TYPICAL PIPE THROUGH FOOTING DETAILS

FOUNDATION WALL


Craig D. Williams
Architecture
Interiors
Planning
Project
Management

295 Neva Street
Sebastopol, CA
95472

(707) 823-2724
CASpAccess@gmail.com



COPYRIGHT AND CONDITIONAL RIGHT OF USE
Drawings, specifications and all ideas, designs, and arrangements indicated on these drawings and specifications are and shall remain the property of Craig Williams, architect and are intended to be used in connection with this specific project only. No part shall be copied or disclosed to others or otherwise be used in connection with any other work or project other than the specified scope of work for which they have been prepared without the prior written consent of the architect. There shall be no changes or deletions from these drawings or the accompanying specifications without the prior written consent of the Architect - the design professional in responsible charge.

THESE DRAWINGS ARE INSTRUMENTS OF SERVICE THE PROPERTY OF CRAIG D. WILLIAMS, ARCHITECT, COPYRIGHT © 2015-2016

Visual contact with these plans and specifications shall constitute conclusive evidence of acceptance of these restrictions.


CRAIG D. WILLIAMS
LICENSED ARCHITECT
CRAIG DOUGLAS WILLIAMS
No. C026642
REN. 10-31-17
STATE OF CALIFORNIA
08.30.2016

NOT FOR CONSTRUCTION UNLESS SIGNED BY THE ARCHITECT AND STAMPED APPROVED BY THE AUTHORITY HAVING JURISDICTION

AGENCY APPROVALS

ACCESSIBILITY UPGRADES
IVES POOL
AND POOL HOUSE
7400 WILLOW STREET
SEBASTOPOL, CA

PROJECT NUMBER: 082515.00
DATE: 30 AUGUST, 2016
DRAWN BY: W
CHECKED BY: CW
REVISIONS:

STANDARD STRUCTURAL NOTES

**S1.0**


© THESE DRAWINGS ARE INSTRUMENTS OF SERVICE AND ARE THE SOLE PROPERTY OF CRAIG WILLIAMS ARCHITECT. ANY USE WITHOUT WRITTEN CONSENT IS PROHIBITED.



Aug 31, 2016 - 12:17pm cwilliams C:\Documents and Settings\cwilliams\Desktop\CLIENTS\SEBASTOPOL CITY\IVES\CD-S1.0.DWG

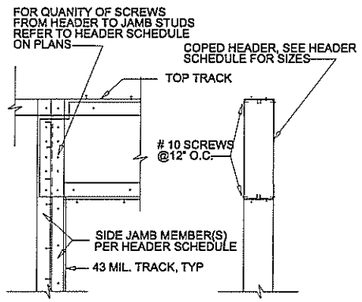


1 COPED HEADER

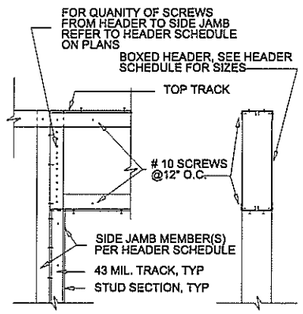


4 BOXED HEADER

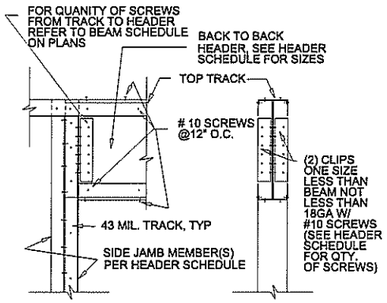


6 BACK TO BACK HEADER

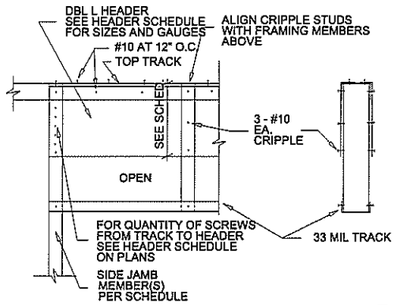


8 DOUBLE L HEADER

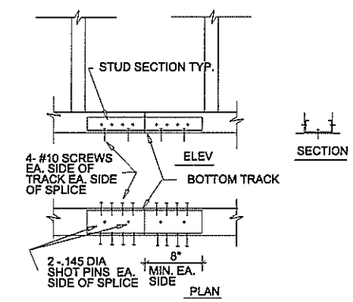


11 BOTTOM TRACK SPLICE

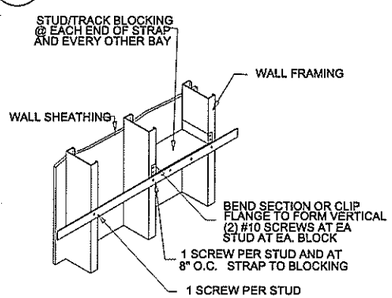


2 HORIZ. BRACING CONNECTION STRAP ON ONE SIDE OF WALL

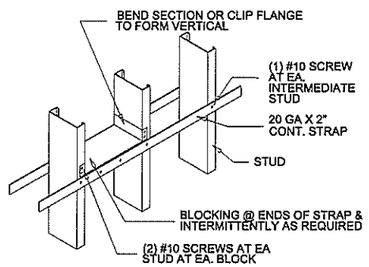


5 HORIZ. BRACING CONNECTION STRAPS BOTH SIDES OF WALL

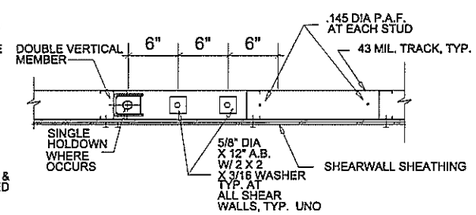


7 SHD'S AT SHEAR WALL

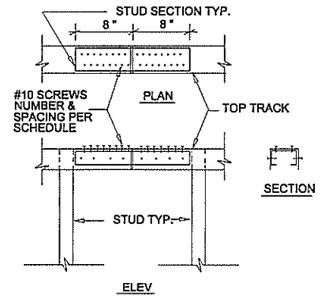


9 TOP TRACK SPLICE

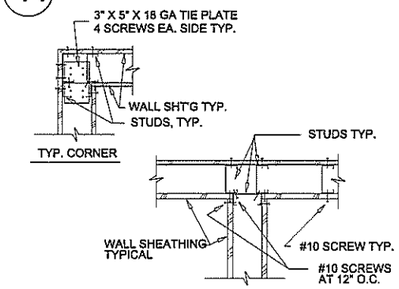


12 WALL CORNERS TYPICAL

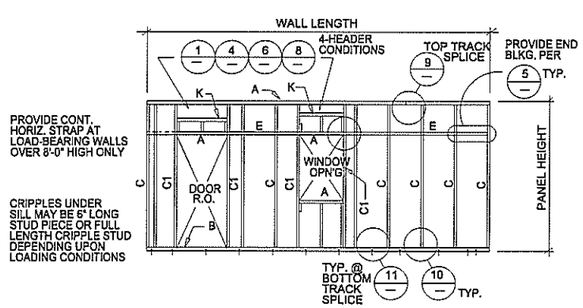


3

| SCHEDULE | | | |
|---|---|---|---|
| MARK | DESCRIPTION | QTY. | SIZE (*) |
| A | TOP TRACK | – | 350T125-43 OR 550T125-43 |
| B | BOTTOM TRACK | – | 350T125-43 OR 550T125-43 |
| C | STUD (BEARING) | – | 350S162-33 OR 550S162-33 |
| C1 | DOUBLE STUD | SEE SCHED. ON PLAN | |
| D | L HEADER | SEE SCHED. ON PLAN | |
| E | STRAP | SEE SCHED. ON PLAN | |
| F | STRAP | – | 2" X 20 GA. |
| G | BLOCKING | – | 350T125-33 OR 550T125-33 |
| H | HEADER TRACK | – | 350T125-33 OR 550T125-33 |

NOTES:

* MEMBER SIZES SHOWN IN THIS DETAIL ARE TYPICAL EXCEPT AS OTHERWISE SHOWN ON THE PLANS OR SPECIFIC PANEL ELEVATIONS.

ALL STUDS SHALL BE SPACED AT 24" O.C. EXCEPT AS SHOWN OTHERWISE AND AS NOTED BELOW.

LOAD BEARING STUDS SHALL BE SPACED SO AS TO FALL DIRECTLY UNDER ROOF JOISTS OR UNDER FLOOR JOISTS.

WHERE DOUBLE STUDS ARE REQUIRED ON SECOND FLOOR TO SUPPORT GIRDERS OR BEAMS, LIKE STUDS SHALL BE PROVIDED IN WALL BELOW FOR CONTINUOUS SUPPORT TO CONCRETE, U.N.O.

0.145 HILTI SHOT #X-ZF 52P8S36 AT MAX. 12" FROM EACH END OF WALL AND AT EACH STUD OR COLUMN EXTERIOR @ BEARING WALL. 12" O.C. MAX INTERIOR @ NON-BEARING WALL 12" O.C. MAX.

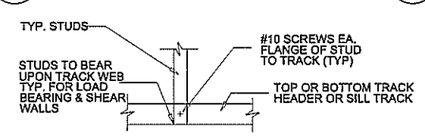


TYPICAL STUD CONNECTION

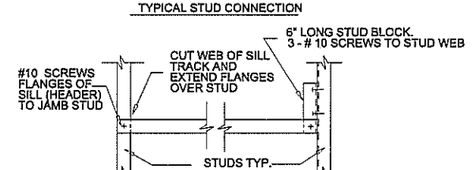


TYPICAL SILL TRACK CONNECTION

10 STUD & TRACK CONNECTIONS

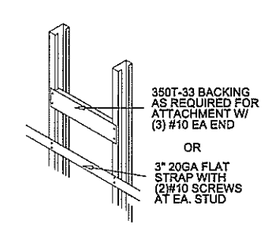


13 HORIZ BACKING CONNECTION


Craig D. Williams
Architecture
Interiors
Planning
Project
Management

295 Neva Street
Sebastopol, CA
95472

(707) 823-2724
CASpAccess@gmail.com



COPYRIGHT AND CONDITIONAL RIGHT OF USE

Drawings, specifications and all ideas, designs, and arrangements indicated on these drawings and specifications are and shall remain the property of Craig Williams, architect and are intended to be used in connection with this specific project only. No part shall be copied or disclosed to others or otherwise be used in connection with any other work or project other than the specified scope of work for which they have been prepared without the prior written consent of the architect. There shall be no changes or deviations from these drawings or the accompanying specifications without the prior written consent of the Architect - the design professional in responsible charge.

THESE DRAWINGS ARE INSTRUMENTS OF SERVICE THE PROPERTY OF CRAIG D. WILLIAMS, ARCHITECT, COPYRIGHT © 2015-2016

Visual contact with these plans and specifications shall constitute conclusive evidence of acceptance of these restrictions.


CRAIG D. WILLIAMS

LICENSED ARCHITECT CRAIG DOUGLAS WILLIAMS No. C026642 REN. 10-31-17 STATE OF CALIFORNIA

08302016

NOT FOR CONSTRUCTION UNLESS SIGNED BY THE ARCHITECT AND STAMPED APPROVED BY THE AUTHORITY HAVING JURISDICTION

AGENCY APPROVALS

ACCESSIBILITY UPGRADES
IVES POOL
AND POOL HOUSE
7400 WILLOW STREET
SEBASTOPOL, CA

PROJECT NUMBER: 082515.00
DATE: 30 AUGUST, 2016
DRAWN BY: CW
CHECKED BY: CW
REVISIONS:

MTL FMG
STRUCTURAL
DETAILS

**S1.1**


© THESE DRAWINGS ARE INSTRUMENTS OF SERVICE AND ARE THE SOLE PROPERTY OF CRAIG WILLIAMS ARCHITECT. ANY USE WITHOUT WRITTEN CONSENT IS PROHIBITED



Aug 31, 2016 - 12:43pm cwilliams C:\Documents and Settings\cwilliams\Desktop\CLIENTS\SEBASTOPOL CITY\IVES\CUD-S1.1.DWG

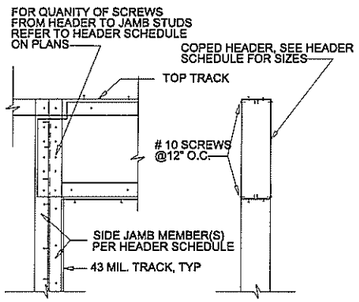


1 COPED HEADER

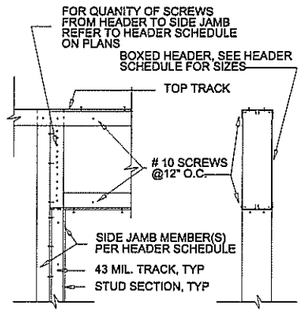


4 BOXED HEADER

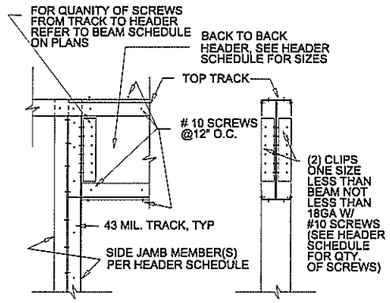


6 BACK TO BACK HEADER

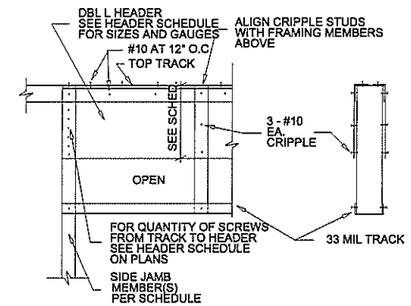


8 DOUBLE L HEADER

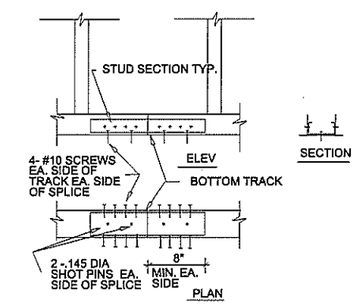


11 BOTTOM TRACK SPLICE

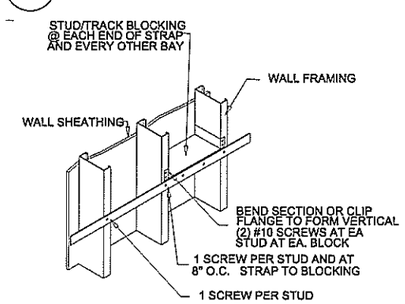


2 HORIZ. BRACING CONNECTION STRAP ON ONE SIDE OF WALL

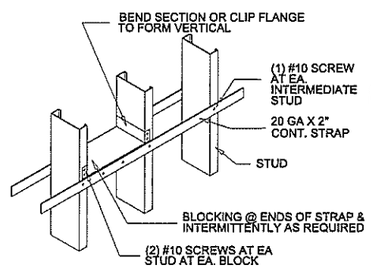


5 HORIZ. BRACING CONNECTION STRAPS BOTH SIDES OF WALL

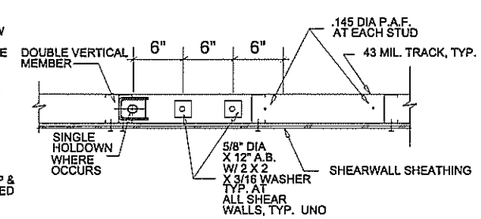


7 SHD'S AT SHEAR WALL

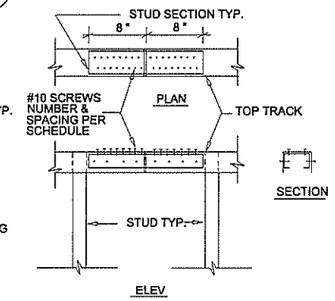


9 TOP TRACK SPLICE

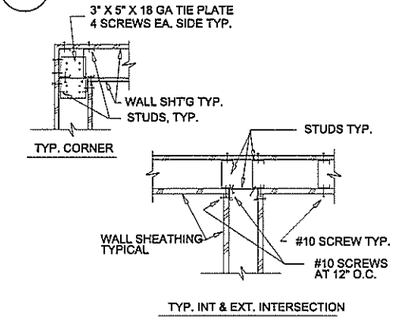


12 WALL CORNERS TYPICAL

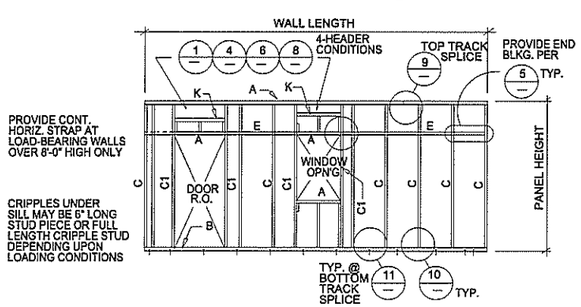


3

| SCHEDULE | | | |
|---|---|---|---|
| MARK | DESCRIPTION | QTY. | SIZE (*) |
| A | TOP TRACK | – | 350T125-43 OR 550T125-43 |
| B | BOTTOM TRACK | – | 350T125-43 OR 550T125-43 |
| C | STUD (BEARING) | – | 350S162-33 OR 550S162-33 |
| C1 | DOUBLE STUD | SEE SCHED. ON PLAN | |
| D | L HEADER | SEE SCHED. ON PLAN | |
| E | STRAP | SEE SCHED. ON PLAN | |
| F | STRAP | – | 2" X 20 GA. |
| G | BLOCKING | – | 350T125-33 OR 550T125-33 |
| H | HEADER TRACK | – | 350T125-33 OR 550T125-33 |

NOTES:

- MEMBER SIZES SHOWN IN THIS DETAIL ARE TYPICAL EXCEPT AS OTHERWISE SHOWN ON THE PLANS OR SPECIFIC PANEL ELEVATIONS.

ALL STUDS SHALL BE SPACED AT 24" O.C. EXCEPT AS SHOWN OTHERWISE AND AS NOTED BELOW.

LOAD BEARING STUDS SHALL BE SPACED SO AS TO FALL DIRECTLY UNDER ROOF JOISTS OR UNDER FLOOR JOISTS.

WHERE DOUBLE STUDS ARE REQUIRED ON SECOND FLOOR TO SUPPORT GIRDERS OR BEAMS, LIKE STUDS SHALL BE PROVIDED IN WALL BELOW FOR CONTINUOUS SUPPORT TO CONCRETE, U.N.O.

0.145 HILTI SHOT #X-ZF 52P8S36 AT MAX. 12" FROM EACH END OF WALL AND AT EACH STUD OR COLUMN EXTERIOR @ BEARING WALL. 12" O.C. MAX INTERIOR @ NON-BEARING WALL 12" O.C. MAX.

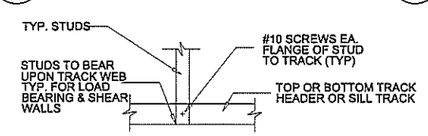


TYPICAL STUD CONNECTION

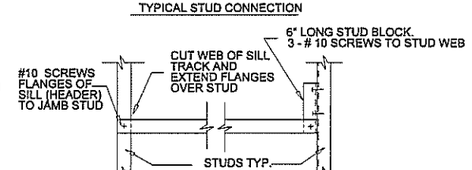


TYPICAL SILL TRACK CONNECTION

10 STUD & TRACK CONNECTIONS

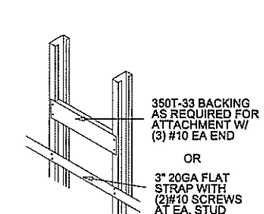


13 HORIZ BACKING CONNECTION


Craig D. Williams
Architecture
Interiors
Planning
Project
Management

295 Neva Street
Sebastopol, CA
95472

(707) 823-2724
CASpAccess@gmail.com



COPYRIGHT AND CONDITIONAL RIGHT OF USE:
Drawings, specifications and all ideas, designs, and arrangements indicated on these drawings and specifications are and shall remain the property of Craig Williams, architect and are intended to be used in connection with the specific project only. No part shall be copied or disclosed to others or otherwise be used in connection with any other work or project other than the specified scope of work for which they have been prepared without the prior written consent of the architect. There shall be no changes or deviations from these drawings or the accompanying specifications without the prior written consent of the Architect - the design professional in responsible charge.

THESE DRAWINGS ARE INSTRUMENTS OF SERVICE THE PROPERTY OF CRAIG D. WILLIAMS, ARCHITECT, COPYRIGHT © 2013-2016

Visual contact with these plans and specifications shall constitute conclusive evidence of acceptance of these restrictions.


CRAIG D. WILLIAMS

LICENSED ARCHITECT CRAIG DOUGLAS WILLIAMS No. C026642 REN. 10-31-17 STATE OF CALIFORNIA

08.30.2016

NOT FOR CONSTRUCTION UNLESS SIGNED BY THE ARCHITECT AND STAMPED APPROVED BY THE AUTHORITY HAVING JURISDICTION

AGENCY APPROVALS

ACCESSIBILITY UPGRADES
IVES POOL
AND POOL HOUSE
7400 WILLOW STREET
SEBASTOPOL, CA

PROJECT NUMBER: 082515.00
DATE: 30 AUGUST, 2016
DRAWN BY: CW
CHECKED BY: CW
REVISIONS:

MTL FMG
STRUCTURAL
DETAILS

**S1.2**


© THESE DRAWINGS ARE INSTRUMENTS OF SERVICE AND ARE THE SOLE PROPERTY OF DAVID WILLIAMS ARCHITECT. ANY USE WITHOUT WRITTEN CONSENT IS PROHIBITED.



Aug 31, 2016 - 12:45pm cwilliams C:\Documents and Settings\cwilliams\Desktop\CLIENTS\SEBASTOPOL CITY\IVES\CD-S1.2.DWG

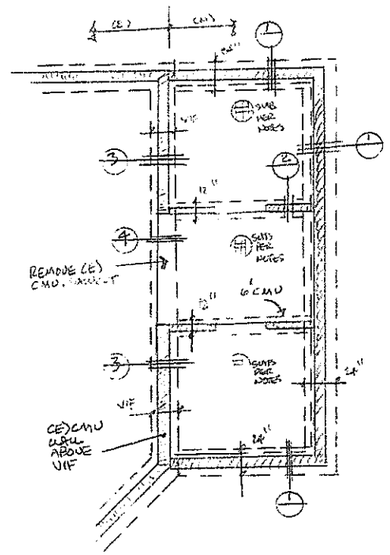


## FOUNDATION PLAN

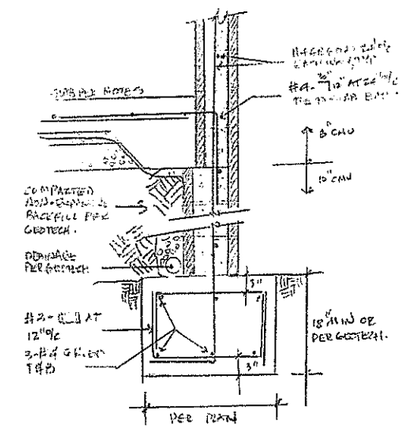


1 TYPICAL NEW FOOTING AT EXTERIOR CMU WALL

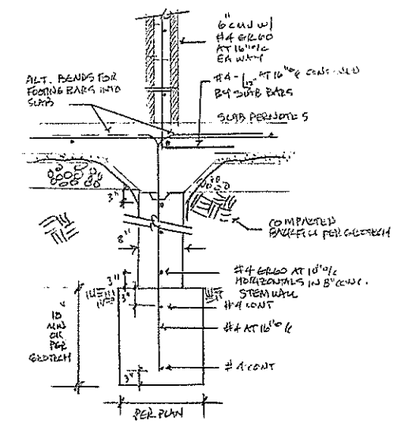


2 TYPICAL NEW FOOTING AT INTERIOR CMU WALL

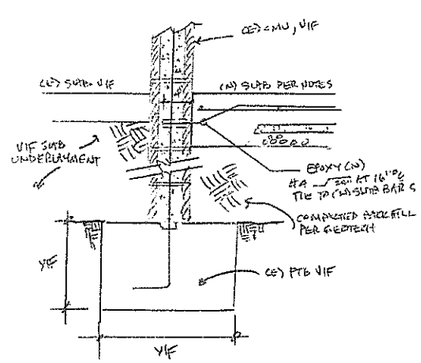


3 TYPICAL (N) SLAB AT (E) CMU WALL

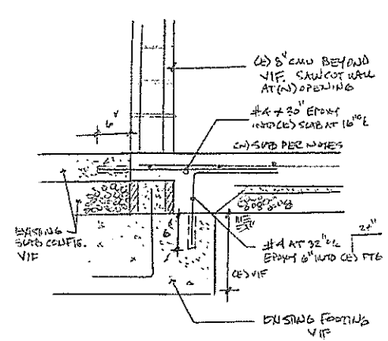


4 SLAB AT (N) WALL OPENING


Craig D. Williams
Architecture
Interiors
Planning
Project
Management

295 Neva Street
Sebastopol, CA
95472

(707) 823-2724
CASpAccess@gmail.com



COPYRIGHT AND CONDITIONAL RIGHT OF USE

Drawings, specifications and all lines, designs, and arrangements indicated on these drawings and specifications are and shall remain the property of Craig Williams, architect and are intended to be used in connection with this specific project only. No part shall be copied or disclosed to others or otherwise be used in connection with any other work or project other than this specified scope of work for which they have been prepared without the prior written consent of the architect. There shall be no changes or deviations from these drawings or the accompanying specifications without the prior written consent of the Architect - the design professional in responsible charge.

THESE DRAWINGS ARE INSTRUMENTS OF SERVICE THE PROPERTY OF CRAIG D. WILLIAMS, ARCHITECT, COPYRIGHT © 2015-2016

Visual contact with these plans and specifications shall constitute conclusive evidence of acceptance of these restrictions.


CRAIG D. WILLIAMS

LICENSED ARCHITECT CRAIG DOUGLAS WILLIAMS No. C026642 REN. 10-31-17 STATE OF CALIFORNIA

08302016

NOT FOR CONSTRUCTION UNLESS SIGNED BY THE ARCHITECT AND STAMPED APPROVED BY THE AUTHORITY HAVING JURISDICTION

AGENCY APPROVALS

ACCESSIBILITY UPGRADES
IVES POOL
AND POOL HOUSE
7400 WILLOW STREET
SEBASTOPOL, CA

PROJECT NUMBER:
082515.00
DATE:
30 AUGUST, 2016
DRAWN BY:
CW
CHECKED BY:
CW
REVISIONS:

STRUCTURAL
FOUNDATION
PLAN & DETAILS

**S1.3**


© THESE DRAWINGS ARE INSTRUMENTS OF SERVICE AND ARE THE SOLE PROPERTY OF CRAIG WILLIAMS ARCHITECT. ANY USE WITHOUT WRITTEN CONSENT IS PROHIBITED.



Aug 31, 2016 - 12:34pm cwilliams C:\Documents and Settings\cwilliams\Desktop\CLIENTS\SEBASTOPOL CITY\IVES\CD-S1.3.DWG

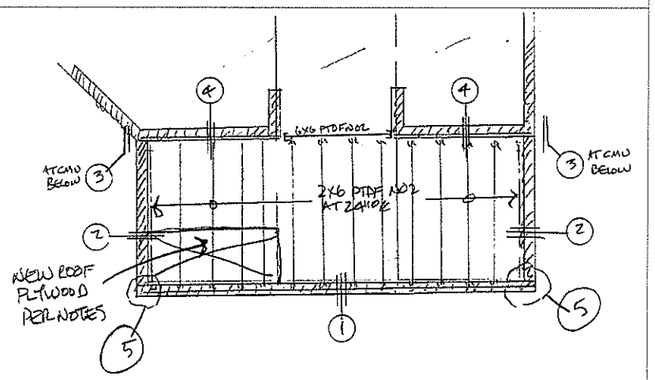


## ROOF FRAMING PLAN

1

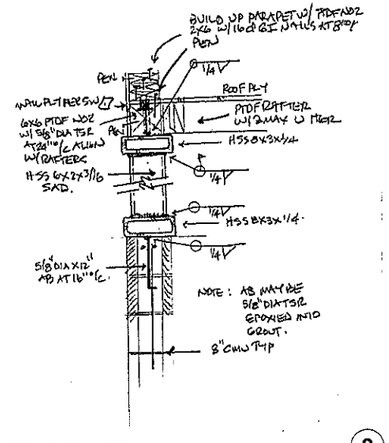


2

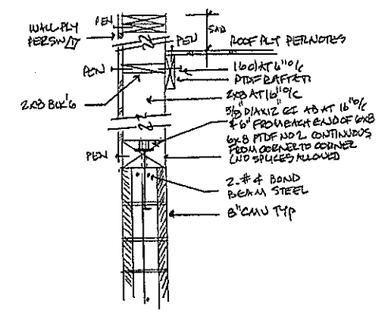


3

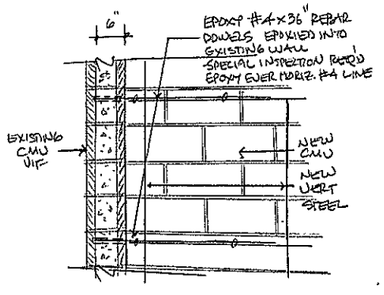


4

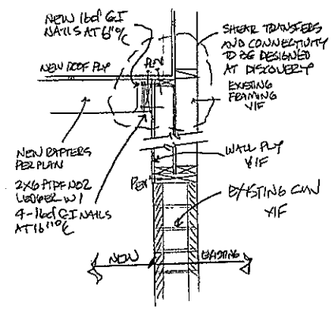


5

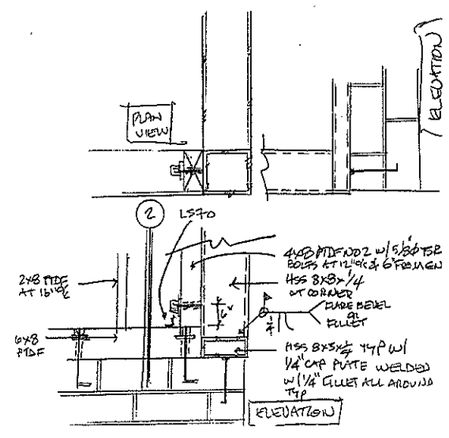



Craig D. Williams
Architecture
Interiors
Planning
Project
Management

295 Neva Street
Sebastopol, CA
95472

(707) 823-2724
CASpAccess@gmail.com



COPYRIGHT AND CONDITIONAL RIGHT OF USE

Drawings, specifications and all ideas, designs, and arrangements indicated on these drawings and specifications are and shall remain the property of Craig Williams, architect and are intended to be used in connection with this specific project only. No part shall be copied or disclosed to others or otherwise be used in connection with any other work or project other than the specified scope of work for which they have been prepared without the prior written consent of the architect. There shall be no changes or deviations from these drawings or the accompanying specifications without the prior written consent of the Architect - the design professional in responsible charge.

THESE DRAWINGS ARE INSTRUMENTS OF SERVICE THE PROPERTY OF CRAIG D. WILLIAMS, ARCHITECT, COPYRIGHT © 2015-2016

Visual contact with these plans and specifications shall constitute conclusive evidence of acceptance of these restrictions.


CRAIG D. WILLIAMS

LICENSED ARCHITECT CRAIG DOUGLAS WILLIAMS No. C026642 REN. 10-31-17 STATE OF CALIFORNIA

08302016

NOT FOR CONSTRUCTION UNLESS SIGNED BY THE ARCHITECT AND STAMPED APPROVED BY THE AUTHORITY HAVING JURISDICTION

AGENCY APPROVALS

# ACCESSIBILITY UPGRADES IVES POOL AND POOL HOUSE

7400 WILLOW STREET
SEBASTOPOL, CA

PROJECT NUMBER:
082515.00
DATE:
30 AUGUST, 2016
DRAWN BY:
CHECKED BY:
CW
REVISIONS:

STRUCTURAL WALL AND ROOF DETAILS

**S1.4**


© THESE DRAWINGS ARE INSTRUMENTS OF SERVICE AND ARE THE SOLE PROPERTY OF CRAIG WILLIAMS ARCHITECT. ANY USE WITHOUT WRITTEN CONSENT IS PROHIBITED.



Aug 31, 2016 - 12:40pm cwilliams C:\Documents and Settings\cwilliams\Desktop\CLIENTS\SEBASTOPOL CITY\WES\CD-S1.4.DWG

# PLAN SET NOTES

1. THESE PLANS ARE THE COPYRIGHT PROTECTED INTELLECTUAL PROPERTY OF CRAIG D. WILLIAMS, ARCHITECT OF RECORD, AND ARE NOT TO BE USED, IN WHOLE OR IN PART, FOR ANY OTHER PURPOSE THAN FOR THIS PROJECT, AND AT THE LOCATIONS SHOWN HEREIN, WITHOUT THE EXPRESS WRITTEN PERMISSION OF THE ARCHITECT OF RECORD. THE ARCHITECT AND HIS CONSULTANTS, THEIR EMPLOYEES, AGENTS AND ASSIGNS SHALL BE INDEMNIFIED AND HELD HARMLESS FROM ANY AND ALL CLAIMS ARISING OUT OF, OR RELATED TO, SUCH UNAUTHORIZED USE. AUTHORIZATION IS NOT GIVEN TO ANY CITY EMPLOYEE OR ASSIGN IN ANY CAPACITY WHATSOEVER TO GIVE DIRECTION TO CONTRACTORS OR OTHERS TO DEVIATE FROM THE PLANS AS APPROVED BY THE AUTHORITY HAVING JURISDICTION. THE AHJ ASSUMES ALL LIABILITY FOR ANY SUCH UNAUTHORIZED DIRECTION AND SHALL COMPENSATE OWNER AND ARCHITECT FOR ANY CONSEQUENCES ARISING DIRECTLY OR INDIRECTLY OUT OF SUCH UNAUTHORIZED DIRECTION WHETHER ORAL OR WRITTEN. THE AHJ AGREES AND IS BOUND TO TIMELY CONVEY ANY INFORMATION REGARDING DEVIATIONS FROM APPROVED PLANS TO THE ARCHITECT OF RECORD.
2. THE ORIGINAL OF THESE DRAWING SHEETS MEASURE 24"x36". IF THE SHEET SIZE IN USE DIFFERS IN SIZE FROM THE ORIGINAL THEN THE SCALE, WHERE NOTED, IS NO LONGER ACCURATE.
3. BUILDING INSPECTOR NOTE: ACCEPT NO INK OR PENCIL CORRECTIONS TO THESE PRINTS. ALL CHANGES SHALL BE MADE TO THE ORIGINALS BY THE ORIGINAL PREPARER [CRAIG D. WILLIAMS, ARCHITECT OR AUTHORIZED CONSULTANTS] ONLY. THE ARCHITECT OF RECORD SHALL BE HELD HARMLESS FOR ANY AND ALL CHANGES NOT IN ACCORD WITH THIS REQUIREMENT.
4. ALL USERS OF THESE DRAWINGS AGREE BY USING SAID DRAWINGS TO HOLD CRAIG D. WILLIAMS, ARCHITECT HARMLESS FOR ANY AND ALL WORK THAT DOES NOT CONFORM TO ALL REQUIREMENTS AND MOST STRINGENT STANDARDS OF THE AMERICANS WITH DISABILITIES ACT, AMERICANS WITH DISABILITIES ACT ACCESSIBILITY GUIDELINES, CALIFORNIA BUILDING CODES IN FORCE, APPLICABLE LOCAL ORDINANCES, AND ACCEPTED INDUSTRY STANDARDS OF PRACTICE.
5. NOTIFY ARCHITECT A MINIMUM OF 48 HOURS PRIOR TO SCHEDULING AGENCY INSPECTIONS.
6. NO PORTION OF THE WORK REQUIRING A SHOP DRAWING OR SAMPLE SUBMISSION SHALL BE COMMENCED UNTIL THE SUBMISSION HAS BEEN APPROVED BY THE ARCHITECT. ALL SUCH PORTIONS OF THE WORK SHALL BE IN ACCORDANCE WITH AGENCY APPROVED CONSTRUCTION DOCUMENTS, SHOP DRAWINGS AND SAMPLES.

# DESIGN TEAM


ARCHITECT OF RECORD: (site accessibility this project only)
CRAIG D. WILLIAMS, ARCHITECT OF RECORD C-26642
CERTIFIED ACCESS SPECIALIST -DSA / CASP-005
295 NEVA STREET STREET
SEBASTOPOL, CA 95472
(707) 823-2724 (OFFICE)
(707) 400-6325 (CELL)
caspaccess@gmail.com

ENGINEER OF RECORD:
MARK LEVEL
7106 BODEGA AVENUE
SEBASTOPOL, CA 95472
(707) 829-8439

T-24 ENERGY ANALYSIS:
SOL DATA
2235 CHALLENGER WAY, STE 130
SANTA ROSA, CA 95407
(707) 545-4440

SOILS ANALYSIS:
PATRICK J. CONWAY ASSOCIATES, P.E.
600 MARTIN AVENUE, STE 210
ROHNERT PARK, CA 94928
(707) 584-4804

OWNER:
CITY OF SEBASTOPOL


# APPLICABLE CODES

CONSTRUCTION OF THIS PROJECT SHALL BE IN ACCORDANCE WITH THE CALIFORNIA MODIFIED VERSION (TITLE 24, 2013 EDITION W/ 1 JUNE, 2015 SUPPLEMENT ) OF THE FOLLOWING CODES INCORPORATED HEREIN BY REFERENCE AS IF REPEATED IN FULL. NOTHING IN THESE CONSTRUCTION DOCUMENTS SHALL BE INTERPRETED AS REPRESENTING A DEVIATION FROM OR AS INTENDING TO RESULT IN CONDITIONS NOT MEETING OR EXCEEDING THE MOST STRINGENT REQUIREMENTS OF ANY APPLICABLE STANDARDS:

## BUILDING CODES AND STANDARDS

- 2013 CALIFORNIA BUILDING STANDARDS, ADMINISTRATIVE CODE (PART 1, TITLE 24, CCR)
- 2013 CALIFORNIA BUILDING CODE, VOLUMES 1, 2 AND 3 (PART 2, TITLE 24, CCR) (2012 EDITION INTERNATIONAL BUILDING CODE WITH 2013 CALIFORNIA AMENDMENTS)
- 2013 CALIFORNIA ELECTRICAL CODE (PART 3, TITLE 24, CCR) (2012 EDITION NATIONAL ELECTRICAL CODE WITH 2013 CALIFORNIA AMENDMENTS)
- 2013 CALIFORNIA MECHANICAL CODE (PART 4, TITLE 24, CCR) (2012 EDITION IAMPO UNIFORM MECHANICAL CODE WITH 2013 CALIFORNIA AMENDMENTS)
- 2010 CALIFORNIA ENERGY CODE (PART 6, TITLE 24, CCR)
- 2013 CALIFORNIA PLUMBING CODE (PART 5, TITLE 24, CCR) (2012 EDITION IAPMO UNIFORM PLUMBING CODE WITH 2013 CALIFORNIA AMENDMENTS)
- 2013 EDITION OF CALIFORNIA ENERGY CODE
- 2013 CALIFORNIA FIRE CODE (PART 9, TITLE 24, CCR) (2012 EDITION INTERNATIONAL FIRE CODE CODE WITH 2010 CALIFORNIA AMENDMENTS)
- 2013 CALIFORNIA REFERENCED STANDARDS CODE (PART 12, TITLE 24, CCR) TITLE 19, CCR, PUBLIC SAFETY, STATE FIRE MARSHAL REGULATIONS
- HEALTH AND SAFETY CODE (HSC), SECTION 13145
- THE MOST STRINGENT OF THE 2010 EDITION OF THE AMERICANS WITH DISABILITIES ACT (ADA) AND 2010 ADAS / 2013 TITLE 24, CBC CHAPTER 11B, C.C.R.
- ADA/ABA AS PUBLISHED IN THE FEDERAL REGISTER ON JULY 26, 2010
- OCCUPATIONAL HEALTH AND SAFETY CODES, CAL OSHA.
- LOCAL / REGIONAL MUNICIPAL ORDINANCES AND ANY AMENDMENTS TO APPLICABLE CODES AND REGULATIONS, INCORPORATED BY REFERENCE.

# ADA

THE 2010 AMERICANS WITH DISABILITIES ACT STANDARDS FOR ACCESSIBLE DESIGN, THE INTERNATIONAL BUILDING CODE - AS AMENDED BY STATE AND LOCAL GOVERNMENT ENTITIES, (IBC - CBC) AND AMERICANS NATIONAL STANDARDS INSTITUTE ANSI A117.1, EACH AS AMENDED, APPLY TO THIS PROJECT AND ARE INCORPORATED IN THESE PLANS BY REFERENCE, WITH THE MOST RESTRICTIVE PROVISION APPLYING. LOCAL AUTHORITIES ARE NOT REQUIRED TO ENFORCE FEDERAL REGULATIONS, HOWEVER, UNLESS SPECIFICALLY OTHERWISE STATED, NOTHING ON THE DRAWINGS IS TO BE CONSTRUED AS REQUIRING OR PERMITTING WORK THAT IS CONTRARY TO THE MOST RESTRICTIVE STANDARD ESTABLISHED BY ANY REFERENCED REGULATIONS WHICH MAY BE APPLICABLE TO THIS PROJECT. CONTRACTORS ARE REQUIRED TO CONSTRUCT ALL WORK IN STRICT ACCORDANCE WITH ALL STATE AND FEDERAL REGULATIONS, THE MOST RESTRICTIVE GOVERNING THE WORK OF THIS PROJECT.

# NATIONAL REFERENCE STANDARDS

REFERENCE STANDARDS BELOW ARE HEREWITH INCORPORATED AS IF STATED IN FULL IN THESE CONSTRUCTION DOCUMENTS

ACI - AMERICAN CONCRETE INSTITUTE
ACI 117-90

ASD (AISC) MANUAL OF STEEL CONSTRUCTION, LATEST ADOPTED EDITION.

ASTM - AMERICAN SOCIETY OF TESTING MATERIALS
ASTM - E1155-87

ASPHALT INSTITUTE, "THE ASPHALT HANDBOOK" AND "ASPHALT PAVEMENT MAINTENANCE", LATEST ADOPTED EDITION.

ANSI 117.1, LATEST ADOPTED EDITION.

UL - UNDERWRITER LABORATORIES

OCCUPATIONAL HEALTH AND SAFETY ADMINISTRATION
FEDERAL AND STATE STANDARDS

# IMPORTANT NOTICE

*UNDERGROUND SERVICE ALERT*

SECTIONS 4216 - 4217 OF THE CALIFORNIA GOVERNMENT CODE REQUIRES A DIGALERT IDENTIFICATION NUMBER BE ISSUED BEFORE A "PERMIT TO EXCAVATE" WILL BE VALID. FOR YOUR DIGALERT I.D. NUMBER CALL UNDERGROUND SERVICE ALERT TOLL FREE 1-800-422-4133 A MINIMUM OF TWO (2) WORKING DAYS BEFORE COMMENCING EXCAVATION.

*CALL BEFORE YOU DIG*
*CALL: TOLL FREE*
*1-800-422-4133*

TWO WORKING DAYS BEFORE DIGGING

# ABBREVIATIONS

| | |
|---|---|
| & | AND |
| ∠ | ANGLE |
| @ | AT |
| ℄ | CENTERLINE |
| Ø | DIAMETER |
| FL | FLOOR LINE |
| PL | PROPERTY LINE |
| # | POUND OR NUMBER |
| A.B. | ANCHOR BOLT |
| A.B.A. | ARCHITECTURAL BARRIERS ACT |
| A.C.P. | ASPHALT CONCRETE PAVING / PAVEMENT |
| A/C | AIR CONDITIONING |
| ACOUS. | ACOUSTIC |
| A.C.T. | ACOUSTICAL TILE |
| A.D. | AREA DRAIN |
| A.D.A. | AMERICANS WITH DISABILITIES ACT |
| A.D.A.A.G. | AMERICANS WITH DISABILITIES ACT GUIDELINES |
| ADJ. | ADJUSTABLE |
| AGG. | AGGREGATE |
| AL. | ALUMINUM |
| ALT. | ALTERNATE |
| A.P.L. | ASSUMED PROPERTY LINE |
| A.P.T. | ACCESSIBLE PATH OF TRAVEL |
| APPROX. | APPROXIMATE |
| ARCH. | ARCHITECT |
| ASPH. | ASPHALT |
| BD. | BOARD |
| BITUM. | BITUMINOUS |
| BLDG. | BUILDING |
| BLK. | BLOCK |
| BLKG. | BLOCKING |
| BM. | BENCH MARK or BEAM |
| BOT. | BOTTOM |
| BRG. | BEARING |
| BRK. | BRICK |
| BRZ. | BRONZE |
| BTWN. | BETWEEN |
| B.U.R. | BUILT-UP ROOFING |
| CAB. | CABINET |
| CARP. | CARPET |
| C.B. | CATCH BASIN |
| CEM. | CEMENT |
| CER. | CERAMIC |
| CER.T. | CERAMIC TILE |
| C.I. | CAST IRON |
| CIR. | CIRCLE |
| C.J. | CONSTRUCTION JOINT |
| CLG. | CEILING |
| CLG.J. | CEILING JOIST |
| CLKG. | CAULKING |
| CLO. | CLOSET |
| CLR. | CLEAR |
| CLS. | CLOSURE |
| C.M.U. | CONCRETE MASONRY UNIT |
| CNTR. | COUNTER |
| C.O. | CLEAN OUT |
| COL. | COLUMN |
| COMB. | COMBINATION |
| COMP. | COMPOSITION |
| CONC. | CONCRETE |
| CONN. | CONNECTION |
| CONST. | CONSTRUCTION |
| CONT. | CONTINUOUS |
| CONV.O. | CONVECTION OVEN |
| CTR. | CENTER |
| C.W. | COLD WATER |
| DET. | DETAIL |
| DF. | DOUGLAS FIR |
| D.F. | DRINKING FOUNTAIN |
| DIA. | DIAMETER |
| DIAG. | DIAGONAL |
| DIM. | DIMENSION |
| DISP. | DISPOSAL |
| DIV. | DIVISION |
| DN. | DOWN |
| D.O. | DOOR OPENING |
| DR. | DOOR |
| D.S. | DOWN SPOUT |
| D.T. | DRAIN TILE |
| D.W. | DISHWASHER |
| DWR. | DRAWER |
| (E) | EXISTING |
| E. | EAST |
| EA. | EACH |
| E.E. | EACH END |
| E.F. | EXHAUST FAN |
| E.J. | EXPANSION JOINT |
| ELEC. | ELECTRICAL |
| ELEV. | ELEVATION |
| E.N. | EDGE NAIL |
| ENCL. | ENCLOSURE |
| EQUIV. | EQUIVALENT |
| E.S. | EACH SIDE |
| E.V.A. | EMERGENCY VEHICLE ACCESS |
| E.W. | EACH WAY |
| EXP. | EXPANSION |
| EXP.B. | EXPANSION BOLT |
| EXPO. | EXPOSURE |
| EXT. | EXTERIOR |
| F. | FACE |
| F.A. | FIRE ALARM |
| F.B. | FACE BRICK |
| F.BD. | FIREBOARD |
| F.BELL | FIRE BELL |
| F.B.O. | FURNISHED BY OTHERS |
| F.D. | FLOOR DRAIN |
| FDN. | FOUNDATION |
| F.E. | FIRE EXTINGUISHER |
| F.E.C. | FIRE EXTINGUISHER CABINET |
| F.F. | FINISH FLOOR |
| F.G. | FINISH GRADE |
| FGL. | FIBERGLASS |
| F.H. | FIRE HYDRANT |
| F.H.M.S. | FLAT HEAD MACHINE SCREW |
| F.HORN | FIRE HORN |
| F.H.S. | FIRE HOSE STATION |
| F.H.W.S. | FLAT HEAD WOOD SCREW |
| FIN. | FINISH |
| FIXT. | FIXTURE |
| F.J. | FLOOR JOIST |
| F.L. | FLOOR LINE |
| FLASH. | FLASHING |
| FLR. | FLOOR |
| F.N. | FACE NAIL |
| F.O.B. | FACE OF BUILDING |
| F.O.C. | FACE OF CONCRETE |
| F.O.F. | FACE OF FINISH |
| F.O.M. | FACE OF MASONRY |
| F.O.S. | FACE OF STUD |
| F.R. | FIRE RETARDANT |
| FTG. | FOOTING |
| FUT. | FUTURE |
| GA. | GAUGE |
| GALV. | GALVANIZED |
| G.B. | GRAB BAR |
| G.D. | GARBAGE DISPOSAL |
| G.E. | GRATE ELEVATION |
| G.I. | GALVANIZED IRON |
| GL. | GLASS |
| GL.B. | GLUE LAMINATED BEAM |
| GND. | GROUND |
| GR. | GRADE |
| G.S.M. | GALVANIZED SHEET METAL |
| GYP.BD. | GYPSUM BOARD |
| H.B. | HOSE BIB |
| H.C. | HOLLOW CORE |
| HDR. | HEADER |
| HDWD. | HARDWOOD |
| HDWE. | HARDWARE |
| HGT. | HEIGHT |
| H.M. | HOLLOW METAL |
| HORIZ. | HORIZONTAL |
| H.P. | HIGH POINT |
| HR. | HOUR |
| HTG. | HEATING |
| H.V.A.C. | HEATING, VENTILATION & AIR CONDITIONING |
| H.W. | HOT WATER |
| I.D. | INSIDE DIAMETER |
| INSUL. | INSULATION |
| INT. | INTERIOR |
| INV. | INVERT |
| JAN. | JANITOR |
| J.H. | JOIST HANGER |
| JST. | JOIST |
| JT. | JOINT |
| KIT. | KITCHEN |
| LAB. | LABORATORY |
| LAM. | LAMINATE |
| LAV. | LAVATORY |
| L.B. | LAG BOLT |
| L.H. | LEFT HAND |
| L.L. | LIVE LOAD |
| L.P. | LOW POINT |
| LT. | LIGHT |
| MAT. | MATERIAL |
| MAX. | MAXIMUM |
| M.B. | MACHINE BOLT |
| M.C. | MEDICINE CABINET |
| MECH. | MECHANICAL |
| MED. | MEDIUM |
| MEMB. | MEMBRANE |
| MFG. | MANUFACTURER |
| MH. | MANHOLE |
| MIN. | MINIMUM |
| MIR. | MIRROR |
| MISC. | MISCELLANEOUS |
| M.O. | MASONRY OPENING |
| MOD. | MODULAR |
| M.R. | MOISTURE RESISTANT |
| M.T. | METAL THRESHOLD |
| MTL. | METAL |
| (N) | NEW |
| N. | NORTH |
| NAT. | NATURAL |
| N.I.C. | NOT IN CONTRACT (NOT PART OF DSA APPROVAL) |
| NO. | NUMBER |
| NOM. | NOMINAL |
| N.T.S. | NOT TO SCALE |
| O/ | OVER |
| O.A. | OVERALL |
| OBS. | OBSCURE |
| O.C. | ON CENTER |
| O.D. | OUTSIDE DIAMETER |
| O.F. | OVERFLOW |
| OFF. | OFFICE |
| O.F.S. | OUTSIDE FACE OF STUD |
| O.H.W.S. | OVAL HEAD WOOD SCREW |
| OPP. | OPPOSITE |
| P. | PAINT |
| P.C.F. | POUNDS PER CUBIC FOOT |
| P.D.F. | POWDER DRIVEN FASTENER (SEE P.D.P. ALSO) |
| P.D.P. | POWDER DRIVEN PINS |
| P.E.N. | PANEL EDGE NAILING |
| PERF. | PERFORATED |
| PL. | PLATE |
| P.LAM. | PLASTIC LAMINATE |
| PLAS. | PLASTER |
| P.L.F. | POUNDS PER LINEAR FOOT |
| PLYWD. | PLYWOOD |
| P.M.F. | PRESSED METAL FRAME |
| PR. | PAIR |
| PROP. | PROPERTY |
| P.S.F. | POUNDS PER SQUARE FOOT |
| P.S.I. | POUNDS PER SQUARE INCH |
| P.STA. | PULL STATION |
| PT. | POINT |
| P.T.D. | PAPER TOWEL DISPENSER |
| P.T.D.F. | PRESSURE TREATED DOUGLAS FIR |
| PTN. | PARTITION |
| P.T.R. | PAPER TOWEL RECEPTACLE |
| P.V.C. | POLYVINYL-CHLORIDE |
| Q.T. | QUARRY TILE |
| RAD. | RADIUS |
| R.B. | RUBBER BASE |
| R.C.P. | REINFORCED CONCRETE PIPE |
| R.D. | ROOF DRAIN |
| RDWD. | REDWOOD |
| REF. | REFERENCE |
| REFR. | REFRIGERATOR |
| REINF. | REINFORCING |
| RESIL. | RESILIENT |
| R.H. | ROOF HATCH |
| R.H.M.S. | ROUND HEAD METAL SCREW |
| R.H.W.S. | ROUND HEAD WOOD SCREW |
| RM. | ROOM |
| R.O. | ROUGH OPENING |
| R.W.L. | RAIN WATER LEADER |
| S. | SOUTH |
| S.A.D. | SEE ARCHITECTURAL DRAWINGS |
| S.BLKG. | SOLID BLOCKING |
| S.C. | SOLID CORE |
| S.C.D. | SEE CIVIL DRAWINGS |
| S.D. | STORM DRAIN |
| S.DISP. | SOAP DISPENSER |
| SEAL. | SEALANT |
| SECT. | SECTION |
| S.E.D. | SEE ELECTRICAL DRAWINGS |
| SHR. | SHOWER |
| SHT. | SHEET |
| SHTG. | SHEATHING |
| SIM. | SIMILAR |
| SL. | SLIDING |
| S.L.D. | SEE LANDSCAPE DRAWINGS |
| S.M.D. | SEE MECHANICAL DRAWINGS |
| S.P. | SOUNDPROOF |
| SPEC. | SPECIFICATION |
| SQ. | SQUARE |
| SQ. FT. | SQUARE FOOT (FEET) |
| S.S. | SANITARY SEWER |
| S.S.D. | SEE STRUCTURAL DRAWINGS |
| STA. | STATION |
| STD. | STANDARD |
| STL. | STEEL |
| S. STL. | STAINLESS STEEL |
| STG. | STORAGE |
| STRUC. | STRUCTURAL |
| SUSP. | SUSPENDED |
| T.B. | TACKBOARD |
| T.&B.OT. | TOP AND BOTTOM |
| TEL. | TELEPHONE |
| TEMP. | TEMPERED |
| TER. | TERRAZZO |
| T&G. | TONGUE AND GROOVE |
| THK. | THICK |
| T.J. | TOOL JOINT |
| T.N. | TOE NAIL |
| T.O.C. | TOP OF CURB |
| T.O.P. | TOP OF PAVEMENT |
| T.O.PL. | TOP OF PLATE |
| T.O.W. | TOP OF WALL |
| T.P.D. | TOILET PAPER DISPENSER |
| TRN. | TRANSOM |
| T.S. | TUBE STEEL |
| T.V. | TELEVISION |
| TYP. | TYPICAL |
| UNF. | UNFINISHED |
| U.O.N. | UNLESS OTHERWISE NOTED |
| UR. | URINAL |
| V.C.T. | VINYL COMPOSITION TILE |
| VERT. | VERTICAL |
| VEST. | VESTIBULE |
| V.G. | VERTICAL GRAIN |
| V.I.F. | VERIFY IN FIELD |
| V.T. | VINYL TILE |
| V.T.R. | VENT TO ROOF |
| V.W.C. | VINYL WALL COVERING |
| W. | WEST |
| W/ | WITH |
| W.C. | WATER CLOSET |
| WD. | WOOD |
| WDW. | WINDOW |
| W.F. | WASH FOUNTAIN |
| W.H. | WATER HEATER |
| W/O | WITHOUT |
| W.O. | WHERE OCCURS |
| W.P. | WATER PROOF |
| W.R. | WATER RESISTANT |
| WT. | WEIGHT |
| W.W.F. | WELDED WIRE FABRIC |
| YD. | YARD |
| O.F.O.I. | OWNER FURNISH OWNER INSTALL |
| O.F.C.I. | OWNER FURNISH CONTRACTOR INSTALL |
| C.F.C.I. | CONTRACTOR FURNISH CONTRACTOR INSTALL |
| C.F.O.I. | CONTRACTOR FURNISH OWNER INSTALL |

# SYMBOLS

- GRID LINE INDICATION
- ROOM IDENTIFICATION — OFFICE: ROOM NAME; A101: ROOM NUMBER; A 4: FINISH SCHEDULE INFORMATION
- INTERIOR ELEVATION — DASH INDICATES NO ELEVATION
- SECTION — A: SECTION NUMBER; A5.2: SECTION SHEET
- DETAIL — 23: DETAIL NUMBER; A7.2: DETAIL SHEET
- EXTERIOR ELEVATION — 3: ELEVATION NUMBER; A7.0: ELEVATION SHEET
- DOOR NUMBER — REFER TO DOOR SCHEDULE
- WINDOW TYPE — REFER TO WINDOW SCHEDULE
- FINISH COLOR DESIGNATION — REFER TO SPECIFICATIONS
- WALL TYPE INDICATOR — REFER TO WALL SCHEDULE
- WORK POINT (OR CONTROL OR DATUM POINT)
- MATCH LINE
- REVISION IDENTIFICATION
- REVISION CLOUD — INDICATES APPROXIMATE AREA(S), LOCATION(S) AND ITEMS REVISED

NOTE: NOT ALL SYMBOL DESIGNATIONS ARE NECESSARILY SHOWN OR OCCUR IN THIS PROJECT

# MATERIALS

- ACOUSTICAL TILE (SECTION)
- BRICK OR C.M.U. (SECTION)
- CEMENT PLASTER (ELEVATION)
- CEMENT PLASTER W/ WIRE LATH (SECTION)
- CEMENT PLASTER W/ EXPANDED LATH (SECTION)
- CERAMIC TILE (PLAN & ELEVATION)
- CONCRETE (SECTION)
- CONCRETE (PLAN)
- CONCRETE MASONRY UNITS (PLAN & SECTION)
- EARTH (SECTION)
- FINISH CARPENTRY (ELEVATION & SECTION)
- GYPSUM BOARD (SECTION)
- INSULATION, BATT (PLAN & SECTION)
- INSULATION, RIGID (PLAN & SECTION)
- METAL (SECTION)
- POROUS FILL (SECTION)
- PLYWOOD (SECTION)
- WOOD, CONTINUOUS (SECTION)
- WOOD, BLOCKING (SECTION)

NOTE: NOT ALL MATERIALS DESIGNATIONS ARE NECESSARILY SHOWN OR OCCUR IN THIS PROJECT

# SITE AND BUILDING BARRIER REMOVAL AND ACCESSIBILITY UPGRADES
## 7400 WILLOW STREET
## SEBASTOPOL, CALIFORNIA

# PROJECT DESCRIPTION

1. THE PROJECT SCOPE IN THESE CONSTRUCTION DOCUMENTS CONSISTS ONLY OF THE CONSTRUCTION OF SPECIFIC AND LIMITED DISABILITY ACCESS IMPROVEMENTS AS DEFINED AND DESCRIBED IN CURRENT FEDERAL AND CALIFORNIA STATE DISABILITY ACCESS STANDARDS. THE SCOPE AND EXTENT OF ACCESSIBILITY IMPROVEMENTS IS LIMITED ONLY TO THE SCOPE AND EXTENT DEFINED AND DESCRIBED IN THESE DOCUMENTS FOR ONLY THOSE ELEMENTS SCHEDULED TO BE MODIFIED. THE AHJ SHALL HAVE NO AUTHORITY TO COMPEL ANY ACCESSIBILITY IMPROVEMENTS BEYOND THOSE THAT ARE DEFINED AND DESCRIBED IN THESE DOCUMENTS. THE IMPROVEMENTS SCHEDULED IN THESE PLANS ARE THOSE THE OWNER HAS DEEMED READILY ACHIEVABLE AND CONSTITUTE SUBSTANTIVE IMPROVEMENTS TO ACCESS WHICH THE AHJ HAS NO AUTHORITY TO DENY, NOR TO CUASE ANY GREATER DEGREE OR MANNER OF IMPROVEMENT OTHER THAN THAT SHOWN FOR THE PURPOSES OF IMPROVING SUCH ACCESS TO THE DEGREE SHOWN. FULL COMPLIANCE WITH THE STRICTEST INTERPRETATION OF ALL ACCESSIBILITY STANDARDS IS NOT INTENDED FOR ALL AREAS NOR FOR ALL ASPECTS OF ACCESSIBILITY AT THE SITE. BY APPROVING THESE PLANS AHJ RECOGNIZES THE FOREGOING AND UNDERSTANDS THAT ACCESSIBILITY DEFICIENCIES EXIST AT THE SITE OF THE WORK, HOWEVER, UNLESS SPECIFICALLY INCLUDED IN THESE DOCUMENTS, THESE CONDITIONS OF NON-COMPLIANCE, IF AND WHERE PRESENT AT ANY TIME, ARE EXCLUDED FROM THE SCOPE OF SERVICES AND SCOPE OF WORK INCLUDED HEREIN. THE DEGREE OF TECHNICAL COMPLIANCE TO BE IMPLEMENTED FOR THE LIMITED INCLUDED ELEMENTS IN THIS PROJECT ARE INTENDED TO COMPLY WITH SAID STANDARDS <u>ONLY</u> TO THE EXTENT TECHNICALLY FEASIBLE, STRUCTURALLY PRACTICABLE AND TO THE EXTENT THAT SUCH WORK IS READILY ACHEIVABLE, DOES NOT RESULT IN AN UNDUE HARDSHIP OR FINANCIAL BURDEN. THE AHJ RECOGNIZES AND AGREES THAT THE OWNER CANNOT AND WILL NOT BE LAWFULLY COMPELLED BY THE AHJ TO UNDERTAKE VOLUNTARY UPGRADES TO ACCESSIBILITY BEYOND THAT WHICH IS VOLUNTARY.

   THE WORK MORE SPECIFICALLY DESCRIBED IN GREATER DETAIL IN THESE CONSTRUCTION DOCUMENTS, GENERALLY INCLUDES THE FOLLOWING:

   A. THIS PROJECT PROPOSES ACCESSIBLE PARKING UPGRADES CONSITING OF SAW CUTTING AND SELECTIVE DEMOLITION AND REMOVAL OF PORTIONS OF EXISTING AC PAVEMENT AND DETERIORATED CONDITIONS OF SAME, NEW AC PAVEMENT OVERLAY, NEW STRIPING AND PAVEMENT MARKINGS AT ACCESSIBLE PARKING SPACES, RELOCATION OF EXISTING AND PROVISION OF NEW PARKING SPACE WHEEL STOPS, ACCESSIBLE PARKING AND ASSOCIATED PARKING SIGNS.

   B. PATH OF TRAVEL UPGRADES ASSOCIATED WITH PROVISION OF ACCESSIBLE PARKING CONSISTING OF SAWCUTTING AND SELECTIVE DEMOLITION OF PAVED WALKING SURFACES, PROVISION OF A ACCESSIBLE WALKS AND DOOR LANDINGS, AND PROVISION OF DIRECTIONAL WAY FINDING SIGNS.

   C. BUILDING ADDITION TO ACHEIVE IMPROVED ACCESSIBLE TOILET ROOM AND SHOWER ROOM FACILITIES.

   D. PROVISION OF ONE WHEELCHAIR ACCESSIBLE SINGLE OCCUPANT TOILET COMPARTMENT AND ROLL-IN SHOWER FACILITIES FOR MEN AND WOMEN, SELECTIVE DEMOLITION AND RECONFIGURATION OF NON-BEARING PARTITION WALLS ALONG WITH ASSOCIATED REROUTING OF INFRASTRUCTURE AND PROVISION OF NEW FINISHES, FIXTURES, EQUIPMENT AND ACCESSORIES COMMENSURATE THEREWITH AND AS REQUIRED TO IMPROVE ACCESSIBILITY AT EXISTING TOILET AND SHOWER ROOMS. PROVISION OF ACCESSIBLE CHANGING AREA AND BENCHES.
2. CONTRACTORS SHALL BE RESPONSIBLE FOR BEING FAMILIAR WITH THESE DOCUMENTS INCLUDING ALL CONTRACT REQUIREMENTS AND THE EXISTING SITE PRIOR TO SUBMITTING BID. ALL CONTRACTORS ARE RESPONSIBLE TO PERFORM A SITE INSPECTION PRIOR TO BID.

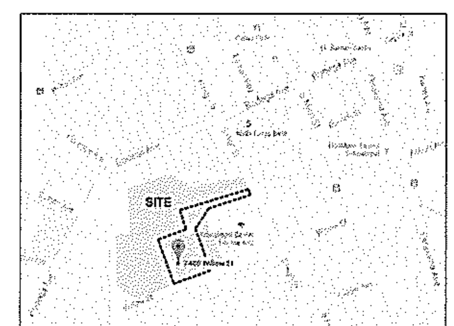


VICINITY MAP — NORTH NOT TO SCALE

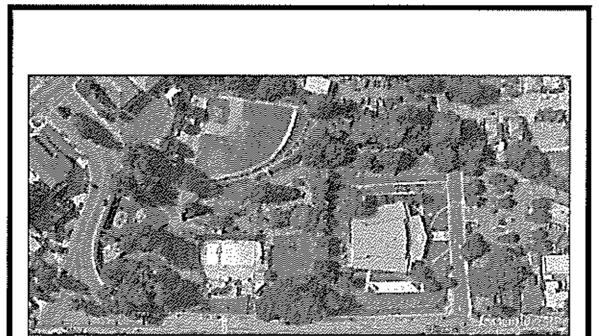

AERIAL MAP — NORTH NOT TO SCALE

# SHEET INDEX

## ARCHITECTURAL - SITE ACCESS COMPLIANCE ONLY


| | |
|---|---|
| T-0.1 | TITLE SHEET |
| T-0.2 | PROJECT NOTES |
| T-0.3 | PROJECT NOTES |
| T-0.4 | PROJECT NOTES |
| T-0.5 | PROJECT NOTES |
| T-0.6 | PROJECT NOTES |
| T24-0.1 | TITLE 24 ENERGY REQUIREMENTS |
| T24-0.2 | TITLE 24 ENERGY REQUIREMENTS |
| T24-0.3 | TITLE 24 ENERGY REQUIREMENTS |
| T24-0.4 | TITLE 24 ENERGY REQUIREMENTS |
| A1.0 | REFERENCE SITE PLAN - NOTES |
| A1.1 | BUILDING DEMOLITION PLAN |
| A1.2 | BUILDING FLOOR PLAN |
| A3.0 | SITE DETAILS & NOTES |
| A3.1 | SITE DETAILS & NOTES |
| A3.2 | SITE DETAILS & NOTES |
| A3.3 | PROJECT DETAILS & NOTES |
| A3.4 | PROJECT DETAILS & NOTES |
| A3.5 | PROJECT DETAILS & NOTES |
| A3.6 | PROJECT DETAILS & NOTES |
| A3.7 | PROJECT DETAILS & NOTES |
| A3.8 | PROJECT DETAILS & NOTES |
| A3.9 | PROJECT DETAILS & NOTES |
| A3.10 | PROJECT DETAILS & NOTES |
| A3.11 | PROJECT DETAILS & NOTES |
| A3.12 | PROJECT DETAILS & NOTES |
| EC1.0 | ENVIRONMENTAL CONTROLS |
| EC1.1 | ENVIRONMENTAL CONTROLS |


## STRUCTURAL


| | |
|---|---|
| S0.0 | STANDARD STRUCTURAL NOTES |
| S0.1 | STANDARD STRUCTURAL NOTES |
| S1.0 | STANDARD STRUCTURAL NOTES |
| S1.1 | METAL FRAMING STRUCTURAL DETAILS |
| S1.2 | WOOD FRAMING STRUCTURAL DETAILS |
| S1.3 | STRUCTURAL FOUNDATION PLAN AND DETAILS |
| S1.4 | STRUCTURAL WALL AND ROOF PLAN AND DETAILS |


SCOPE DOCUMENTS: THESE DRAWINGS INDICATE THE GENERAL SCOPE OF THE PROJECT IN TERMS OF ARCHITECTURAL DESIGN CONCEPT ONLY. THE CONTRACTOR SHALL FURNISH ALL ITEMS, INCIDENTALS AND APPURTENANCES AND ALL LABOR REQUIRED AND COORDINATED FOR THE PROPER EXECUTION AND COMPLETION OF THE WORK IN COMPLIANCE WITH ALL APPLICABLE FEDERAL, STATE AND LOCAL STANDARDS, CODES AND MUNICIPAL ORDINANCES. DECISIONS OF THE OWNER AS TO THE ITEMS OF WORK INCLUDED WITHIN THE SCOPE OF THESE DOCUMENTS SHALL BE FINAL AND BINDING ON THE CONTRACTOR AND THE AHJ.

Drawings and/or specifications and/or calculations for the items listed in the index other than those designated as ARCHITECTURAL as may occur have been prepared by other design professionals or consultants who are licensed and/or authorized to prepare such drawings in this state. These documents have have been examined by me for general design intent only and the Architect of Record places his / her reasonable reliance upon consultants plans and calculations as being in substantial compliance with the appropriate requirements of the the CBC, Title 24, California Code of Regulations

The items listed below or attached are acceptable for incorporation into the construction of this project for which I am the individual designated to be in general responsible charge (or for which I have been delegated responsibility for this portion of the work).

The Site of the Work, the subject of these construction documents, has been personally inspected by me, a Division of the State Architect Certified Access Specialist, and has been found to exhibit conditions that do not comply with construction-related accessibility standards. These construction documents are intended to address some and not all such non-complying conditions.

Signature of Architect/ Date 08302016

| Craig D. Williams, Architect<br>Name, Title | 10-31-17<br>C-26642<br>License No. / Exp.Date | 09-29-17<br>CASp 005 | 12-09-19<br>ICC# 5405912 |
|---|---|---|---|

THIS IS A COMPLETE SET OF ACCESS COMPLIANCE CONSTRUCTION DOCUMENTS - PLANS. THESE PLANS ADDRESS, TO THE LIMITED EXTENT INCLUDED, ACCESS COMPLIANCE ISSUES <u>ONLY</u> AND DO <u>NOT</u> ADDRESS BUILDING OR SITE STRUCTURAL, MECHANICAL, ELECTRICAL, LIGHTING, COMMUNICATIONS, SECURITY AND DATA, PLUMBING, FIRE AND LIFE SAFETY, MOISTURE AND ENVELOPE, STORMWATER DRAINAGE, SUBSURFACE CONDITIONS, CIVIL ENGINEERING OR SURVEYING, SOILS OR GEOTECHNICAL ENGINEERING OR EVALUATION, PAVEMENT SECTION DESIGN, UTILITIES OF ANY KIND, AREAS WITHIN ANY TENANT SPACES, LANDSCAPING OR OTHER ITEMS / ELEMENTS. THE SCOPE OF SERVICES DO NOT INCLUDE AN ASSESSMENT CONDITIONS PRESENT AT THE EXISTING BUILDING OR OF ANY INFRASTRUCTURE, UTILITIES, OR FOR SAFETY, OR THE PRESENCE OF ANY HAZARDOUS MATERIALS OR FOR ANYDETERIORATED OR SUBSTANDARD CONDITIONS, OR THE SAFETY OR FITNESS FOR USE OF THE BUILDING, THE SITE OR ANY OF ITS COMPONENTS.

# PROJECT NOTES

1. A COPY OF 2013 CBC, PARTS 1 AND 2, TITLE 24, CCR SHALL BE AVAILABLE TO THE CONTRACTOR ON THE JOB SITE AT ALL TIMES.
2. ALL CHANGE ORDERS AND ADDENDA TO BE SIGNED BY THE ARCHITECT AND OWNER AND APPROVED BY THE JURISDICTIONAL AGENCIES HAVING AUTHORITY OVER THIS PROJECT. CHANGE ORDERS ARE NOT VALID UNTIL APPROVED BY JURISDICTIONAL AGENCY.
3. THE INTENT OF THE DRAWINGS AND SPECIFICATIONS IS TO PROVIDE ACCESSIBILITY UPGRADES, AS NECESSARY TO THE EXISTING FACILITY WITHIN THE SCOPE OF WORK AREA IDENTIFIED (SPECIFIC AREA OF ALTERATION). THE INTENT IS TO SELECTIVELY REMOVE STRUCTURAL BARRIERS TO PERSONS WITH PHYSICAL DISABILITIES TO THE EXTENT THAT IT IS READILY ACHEIVABLE (AS DETERMINED BY OWNER) AND TO PROVIDE FACILITIES THAT IMPROVE ACCESSIBILITY, TO THE EXTENT TECHNICALLY FEASIBLE, TO REPAIR OR MODIFY EXISTING PAVEMENT SURFACES, PROVIDE UPGRADES TO ACCESSIBLE PARKING WITH ACCOMPANYING ACCESSIBLE SIGNAGE AND PAVEMENT MARKINGS, AND WITHIN THE AREA OF SPECIFIC ALTERATION, AN IMPROVED ACCESSIBLE PATH OF TRAVEL FROM THE PROPOSED ON-SITE ACCESSIBLE PARKING FACILITIES LEADING TO AND CONNECTING WITH THE EXISTING PEDESTRIAN SIDEWALK WITHIN THE PUBLIC RIGHT-OF-WAY, AND COMMENSURATE DIRECTIONAL SIGNAGE ALONG PORTIONS OF THE PATH OF TRAVEL LEADING TO BUILDING ENTRANCES; AND IMPROVMENTS TO PUBLIC RESTROOM FACILITIES. SEE 2013 CBC SECTION 202.4 EXCEPTIONS 5 & 6.
4. WORK INCLUDES, WITHOUT LIMITATION, SELECTIVE DEMOLITION, ALL SITE WORK, MATERIALS AND LABOR AS PART OF THE WORK TO BE PERFORMED AND COMPLETED IN ACCORDANCE WITH THE LATEST ADOPTED EDITION OF TITLE 24, CCR, WITH AMENDMENTS (SEE REFERENCED CODES AND STANDARDS), THE 2010 ADAS, 2013 CBC, AND ANSI 117.1.
5. SHOULD ANY DESIGN, FIELD CONDITIONS OR CONSTRUCTION DEVELOP NOT COVERED BY THESE CONTRACT DOCUMENTS WHEREIN FINISHED WORK WILL NOT COMPLY WITH SAID STANDARDS AND REGULATIONS, THE CONTRACTOR SHALL NOTIFY IN WRITING THE OWNER AND ARCHITECT IMMEDIATELY. A WRITTEN CHANGE ORDER DETAILING AND SPECIFYING ANY WORK TO BE MODIFIED SHALL BE TIMELY SUBMITTED TO AND APPROVED BY THE OWNER, ARCHITECT AND THE JURISDICTIONAL AGENCIES HAVING AUTHORITY BEFORE PROCEEDING WITH ANY AFFECTED WORK.
6. SCOPE DOCUMENTS: THESE DRAWINGS, THE SPECIFICATIONS, AND CONTRACT DOCUMENTS INDICATE THE GENERAL SCOPE OF THE PROJECT IN TERMS OF ARCHITECTURAL DESIGN CONCEPT AND INTENT. THE DIMENSIONS APPLICABLE TO THE WORK, THE MAJOR ELEMENTS OF ACCESSIBILITY. IN ACCORDANCE WITH THE SCOPE INDICATED AND DESCRIBED, THE CONTRACTOR SHALL PROVIDE, FURNISH, INSTALL, COMPLETE, TEST AND PLACE INTO SATISFACTORY SERVICE ALL ITEMS, ASSEMBLIES, SYSTEMS, FIXTURES, EQUIPMENT AND EACH THEIR APPURTENANCES AND INCIDENTALS AS NECESSARY FOR THE PROPER EXECUTION AND COMPLETION OF THE WORK TO BE FULLY COMPLIANT WITH ALL APPLICABLE STANDARDS, CODES, REGULATIONS AND ORDINANCES. THE CONTRACTOR SHALL WARRANT THE WORK, WITHOUT LIMITATION, AS BEING CONSISTENT WITH THE DESIGN INTENT, CONFORM TO APPLICABLE CODES AND REGULATIONS AND BE FREE FROM DEFECT AND FIT FOR PURPOSE.
7. THE 2010 ADA AND LATEST US DOJ ADOPTED ADAAG (2004) IS INCORPORATED IN THESE CONSTRUCTION DOCUMENTS BY REFERENCE. THE 2013 EDITION CALIFORNIA BUILDING CODE ACCESSIBILITY COMPLIANCE STANDARDS, TITLE 24, CALIFORNIA CODE OF REGULATIONS IS ALSO INCORPORATED BY REFERENCE IN THE CONSTRUCTION DOCUMENTS. NOTHING IN THESE PLANS IS INTENDED TO DEVIATE SO AS TO RESULT IN A LESSER STANDARD OF PROTECTION OF THE CIVIL RIGHTS OF PERSONS WITH DISABILITIES. WHERE A DISCREPANCY ARISES, THE MOST STRINGENT REGULATION SHALL APPLY.
8. THESE PLANS HAVE BEEN PREPARED BY CRAIG WILLIAMS, A DIVISION OF THE STATE ARCHITECT CERTIFIED ACCESS SPECIALIST, CASP-005 AND A CALIFORNIA REGISTERED ARCHITECT LIC.No.C26642. THE SITE HAS BEEN INSPECTED BY THE CASP AND THE PUBLIC ACCOMMODATIONS (TITLE III) ARE SUBJECT TO THE PROTECTIONS AFFORDED UNDER SENATE BILL 1608 AND SENATE BILL 1186. CONTRACTORS SHALL BE RESPONSIBLE FOR CONSTRUCTING THIS PROJECT IN STRICT CONFORMANCE WITH THE MOST STRINGENT PROVISIONS OF ALL APPLICABLE CONSTRUCTION-RELATED ACCESSIBILITY STANDARDS.
9. THERE ARE AREAS, FEATURES, AND EXISTING CONSTRUCTION-RELATED ELEMENTS THAT HAVE BEEN OBSERVED AT THE TIME OF SITE INSPECTION TO EXHIBIT CONDITIONS OF NON-COMPLIANCE WITH APPLICABLE ACCESSIBILITY STANDARDS. THESE OTHER CONDITIONS ARE NOT WITHIN THE SCOPE OF WORK FOR THIS PROJECT. THIS PROJECT ENTAILS THE PROVISION OF ON-SITE ACCESSIBLE PARKING FACILITIES, ASSOCIATED SIGNS AND THE PROVISION OF CERTAIN WAYFINDING SIGNAGE ALONG THE PEDESTRIAN PATH OF TRAVEL LEADING TO THE EXISTING BUILDING PUBLIC ENTRANCES. 2013 CBC SECTION 202.4 EXCEPTIONS 5 & 6.
10. CRAIG WILLIAMS ASSUMES NO LIABILITY WHATSOEVER FOR ANY EXISTING SITE CONDITIONS OR THOSE REMAINING AS A RESULT OF THE SCOPE OF WORK PERFORMED, WHETHER COMPLETED OR NOT, ARISING OUT OF ANY AND ALL CONDITIONS OF NON-COMPLIANCE WITH STATE AND FEDERAL ACCESSIBILITY STANDARDS OR STATE BUILDING STANDARDS, OR LOCAL ORDINANCES APPLICABLE TO THE PROJECT SITE. THE OWNER, ITS TENANTS, AGENTS AND ASSIGNS INDIVIDUALLY AND COLLECTIVELY RELEASE, INDEMNIFY, HOLD HARMLESS, WILL DEFEND AND COMPENSATE CRAIG WILLIAMS FOR HIS OWN DEFENSE, INCLUDING ALL COSTS AND ATTORNEY'S FEES AND LEGAL DEFENSE FOR AND FROM ANY AND ALL CLAIMS.


Craig D. Williams
Architecture
Interiors
Planning
Project
Management

295 Neva Street
Sebastopol, CA
95472

(707) 823-2724
CASpAccess@gmail.com


SET No.


COPYRIGHT AND CONDITIONAL RIGHT OF USE
Drawings, specifications and all ideas, designs, and arrangements indicated on these drawings and specifications are and shall remain the property of Craig Williams, architect and are intended to be used in connection with this specific project only. No part shall be copied or disclosed to others or otherwise be used in connection with any other work or project other than the specified scope of work for which they have been prepared without the prior written consent of the architect. There shall be no changes or deviations from these drawings or the accompanying specifications without the prior written consent of the Architect - the design professional in responsible charge.

THESE DRAWINGS ARE INSTRUMENTS OF SERVICE THE PROPERTY OF CRAIG D. WILLIAMS, ARCHITECT, COPYRIGHT © 2015-2016

Visual contact with these plans and specifications shall constitute conclusive evidence of acceptance of these restrictions.


CRAIG D. WILLIAMS

LICENSED ARCHITECT — CRAIG DOUGLAS WILLIAMS — No. C026642 — REN. 10-31-17 — STATE OF CALIFORNIA

08302016

NOT FOR CONSTRUCTION UNLESS SIGNED BY THE ARCHITECT AND STAMPED APPROVED BY THE AUTHORITY HAVING JURISDICTION

THIS SET ISSUED FOR

- ■ CLIENT REVIEW — 21 AUGUST 2016
- ☐ PLAN CHECK -
- ☐ BACK CHECK -
- ☐ CONSTRUCTION / PERMIT -
- ☐ REVISION -

THIS SET NOT FOR CONSTRUCTION UNLESS SIGNED BY THE ARCHITECT AND STAMPED APPROVED BY APPLICABLE JURISDICTIONS HAVING PERMITTING AUTHORITY

VERIFY WITH ARCHITECT THE LATEST APPROVED REVISION OF THESE PLANS. USE ONLY STAMPED, APPROVED AND WET SIGNED DOCUMENTS, LATEST APPROVED REVISION FOR CONSTRUCTION.

AGENCY APPROVALS

ACCESSIBILITY UPGRADES
IVES POOL
AND POOL HOUSE
7400 WILLOW STREET
SEBASTOPOL, CA


© THESE DRAWINGS ARE INSTRUMENTS OF SERVICE AND ARE THE SOLE PROPERTY OF CRAIG WILLIAMS ARCHITECT; ANY USE WITHOUT WRITTEN CONSENT IS PROHIBITED.


PROJECT NUMBER:
082515.00
DATE:
30 AUGUST, 2016
DRAWN BY:
CW
CHECKED BY:
CW
REVISIONS:

TITLE SHEET

**T0.1**

PLAN CHECK / PERMIT No.

## GENERAL SITE NOTES

THE LOCAL FIRE AUTHORITY HAVING JURISDICTION SHALL BE CONSULTED BY CONTRACTOR REGARDING ACCESS WAYS, GATES IN TEMPORARY FENCING, ACCESS FOR FIRE DEPARTMENT PUMPER CONNECTIONS, PORTABLE FIRE EXTINGUISHERS, AND FIRE PROTECTION DURING CONSTRUCTION AND FOR SUCH CONDITIONS THAT ARE REQUIRED UPON COMPLETION OF CONSTRUCTION.

PROPERTY LINES, LOCATION OF BUILDINGS, UTILITIES AND ANY OTHER EXISTING SITE CONDITIONS AND IMPROVEMENTS, WHEN SHOWN, ARE A SCHEMATIC REPRESENTATION OF APPROXIMATE LOCATIONS AND ARE BASED ON INFORMAL FIELD OBSERVATIONS. CONTRACTOR SHALL VERIFY ALL CONDITIONS IN THE FIELD (VIF). CONTRACTOR SHALL ALSO V.I.F. ALL DIMENSIONS AND BE RESPONSIBLE FOR SAME. CONSULT WITH THER CITY'S ARCHIVAL INFORMATION BEFORE BIDDING AND PROCEEDING WITH ANY WORK IN AFFECTED AREAS.

## ACCESSIBILITY NOTES

1. ALL WORK SHALL CONFORM TO THE 2010 AMERICANS WITH DISABILITIES ACT AND 2013 CALIFORNIA ACCESSIBILITY STANDARDS WITH ADOPTED AMENDMENTS, CBC TITLE 24, C.C.R. WITH THE MOST STRINGENT REGULATION GOVERNING THE WORK. THIS PROJECT INCLUDES, WITHOUT LIMITATION, ACCESSIBLE PARKING, PORTIONS OF ACCESSIBLE PATHS OF TRAVEL AT WALKWAYS AND AT SELECT DOOR ENTRY LANDINGS, SIGNS AND WAYFINDING. THE CONTRACTOR SHALL PROVIDE FOR CONTINUOUS COMPLIANCE W/ ACCESSIBILITY FOR AREAS AND BUILDINGS TO REMAIN OPERATIONAL DURING THE COURSE OF WORK. THE CONTRACTOR SHALL VERIFY THAT THE COMPLETED WORK COMPLIES IN EVERY REGARD TO THE MOST STRINGENT REQUIREMENTS OF ALL APPLICABLE STATE AND FEDERAL CONSTRUCTION-RELATED ACCESSIBILITY STANDARDS.
2. NOTE: CERTAIN AREAS AND WALKS AT THIS SITE HAVE BEEN EXCLUDED FROM THE SCOPE OF WORK IN THIS CONTRACT. THE AREAS NOT IN CONTRACT HAVE BEEN OBSERVED TO EXHIBIT ELEMENTS OR CONDITIONS NOT NECESSARILY IN FULL COMPLIANCE WITH ACCESSIBILITY STANDARDS. SUCH ISSUES ARE BEING ADDRESSED IN A REASONABLY TIMELY MANNER CONSISTENT WITH THE ENTITY'S ADA OBLIGATIONS AND WILL BE INCLUDED IN REMEDIATION WORK SCHEDULED IN THE FUTURE.
3. A CERTIFIED ACCESS SPECIALIST SURVEY WAS PERFORMED AT THIS SITE. NOT ALL BARRIERS ARE, HOWEVER, NECESSARILY SHOWN, NOTED OR RECORDED IN THESE CONTRACT DOCUMENTS. THIS PROJECT IS LIMITED TO ADDRESSING ONLY THOSE ITEMS SHOWN AND OR NOTED ON THESE CONSTRUCTION PLANS AND DETAILS.
4. WHERE WORK REQUIRES CLOSURE OR RENDERING AN EXISTING ACCESSIBLE PATH OF TRAVEL NON-ACCESSIBLE, PROVIDE AN ALTERNATE TEMPORARY ACCESSIBLE PATH OF TRAVEL THAT COMPLIES WITH APPLICABLE REGULATIONS. TEMPORARY SHORT TERM (LESS THAN ONE DAY DURATION) NON-COMPLYING CONDITIONS ARE PERMISSIBLE. NOTIFY CITY'S AUTHORIZED REPRESENTATIVE AND ALL AFFECTED PARTIES AND OBTAIN WRITTEN AUTHORIZATION FROM CITY'S AUTHORIZED REPRESENTATIVE PRIOR TO CREATING NON-ACCESSIBLE FACILITIES WITHOUT APPROPRIATE AND SUFFICIENT ALTERNATE ACCESSIBLE PATH OF TRAVEL.
5. WHERE A DISCREPANCY OCCURS BETWEEN THESE NOTES OR PROJECT SPECIFICATIONS AND ANY APPLICABLE OR REFERENCED STANDARDS INCLUDING ALL APPLICABLE CODES AND REGULATIONS, THE MOST STRINGENT SHALL APPLY. DO NOT CONTINUE WITH ANY AFFECTED WORK UNLESS AND UNTIL RESOLVING SUCH DISCREPANCY TO THE SATISFACTION OF THE CITY'S AUTHORIZED REPRESENTATIVE, ARCHITECT AND AHJ.
6. SEE ACCESSIBLE PATH OF TRAVEL NOTES AND DETAIL 2 THIS SHEET AND ON SHEET A1.0.
11. CONTRACTOR IS RESPONSIBLE FOR COORDINATING WORK TO COMPLY WITH THE MOST STRINGENT STATE AND FEDERAL CONSTRUCTION RELATED ACCESSIBILITY STANDARDS
12. WAYFINDING, DIRECTIONAL AND INFORMATIONAL SIGNS AT THIS SITE AND BUILDING SHALL BE ACCESSIBLE AND SHALL BE PROVIDED IN COMPLIANCE WITH SECTION 703, 2013 CBC. CONTRACTOR SHALL PROVIDE TO ARCHITECT MANUFACTURER'S CUT SHEETS AND SUBMITTAL FOR ALL SIGNS INCLUDED IN THE SCOPE OF WORK IN THIS PROJECT AND INDICATED IN THESE CONSTRUCTION DOCUMENTS. MANUFACTURER SHALL INCLUDE IN THEIR SUBMITTAL A STATEMENT SIGNED BY THEIR REPRESENTATIVE AUTHORIZED TO BIND THE COMPANY THAT ALL SIGNS PROVIDED MEET OR EXCEED THE MOST STRINGENT STANDARDS OF BOTH STATE AND FEDERAL REGULATIONS.

## GENERAL ACCESSIBILITY NOTES

THE STATE OF CALIFORNIA DELEGATES TO THE LOCAL MUNICIPALITY THE AUTHORITY TO ENSURE COMPLIANCE WITH TITLE 24, PART 2 OF THE CALIFORNIA CODE OF REGULATIONS. THESE NOTES INDICATE SPECIFIC AREAS OF TITLE 24, PART 2 WHICH MAY BE APPLICABLE TO THIS PROJECT. THE CONTRACTOR SHALL BE RESPONSIBLE FOR COMPLETING WORK AT THIS FACILITY TO BE IN FULL COMPLIANCE WITH BOTH CALIFORNIA STATE AND FEDERAL REGULATIONS CONTAINED IN THE AMERICANS WITH DISABILITIES ACT (ADA). WHERE THE ADA REQUIREMENTS EXCEED THOSE CONTAINED IN TITLE 24, PART 2, IT IS THE CONTRACTOR'S RESPONSIBILITY TO ENSURE COMPLIANCE WITH THE ADA, AS THE LOCAL MUNICIPALITY
IS NOT DELEGATED THE AUTHORITY TO PLAN REVIEW OR INSPECT PROJECTS FOR ADA COMPLIANCE.

THE DESIGN DOCUMENTS SUBMITTED FOR THIS PROJECT SHALL BE REVIEWED FOR COMPLIANCE WITH THE STATE OF CALIFORNIA BUILDING STANDARDS AS MODIFIED AND ADOPTED BY THE LOCAL MUNICIPALITY.

## GENERAL CONDITIONS

1. BEFORE SUBMITTING A PROPOSAL, BIDDERS SHALL EXAMINE THE CONTRACT, THE DRAWINGS, THE SPECIFICATIONS, AND OTHER CONTRACT DOCUMENTS. BIDDERS SHALL VISIT THE SITE OF THE PROPOSED WORK AND SHALL FULLY INFORM THEMSELVES OF ALL CONDITIONS IN AND ABOUT THE WORK SITE, THE BUILDING OR BUILDINGS, IF ANY, AND ANY WORK THAT MAY HAVE BEEN DONE THEREON. SUBMISSION OF PROPOSAL SIGNIFIES CAREFUL EXAMINATION OF THE SITE, CONTRACT DOCUMENTS AND COMPLETE UNDERSTANDING OF THE NATURE, EXTENT AND LOCATION OF WORK TO BE PERFORMED.
2. SUBMISSION OF A PROPOSAL SIGNIFIES THAT THE GENERAL CONTRACTOR HAS REVIEWED THE CONTRACT DOCUMENTS INCLUDING ALL ADDENDA EXHAUSTIVELY THUS ENSURING THAT THEIR PROPOSAL COVERS ALL SCOPE INDICATED. RESPONSIBILITY FOR DIVISION OF WORK INTO TRADE DIVISIONS IS THE SOLE RESPONSIBILITY OF THE GENERAL CONTRACTOR. TRADE SCOPE MAY BE INDICATED AT ANY LOCATION IN THESE DOCUMENTS REGARDLESS OF DISCIPLINE TITLE. IF AN ITEM IS NOT COVERED OR IS EXCLUDED IN A SUBCONTRACTOR'S BID TO THE GENERAL CONTRACTOR, THE GENERAL CONTRACTOR SHALL PROVIDE ACCEPTABLE MEANS BY WHICH THE ITEM IS INCLUDED AS PART OF THE PROPOSAL.
3. ALL SLOPES SHOWN ON THIS PLAN WERE DESIGNED AT OR BELOW MAXIMUMS ALLOWED BY THE CALIFORNIA BUILDING CODE (CBC-2013) AND THE AMERICANS WITH DISABILITY ACT STANDARDS FOR ACCESSIBLE DESIGN (ADAS-2010) IN ORDER TO ALLOW FOR CONSTRUCTION TOLERANCES. IT IS THE CONTRACTOR'S RESPONSIBILITY TO FAMILIARIZE THEMSELVES WITH CBC/ ADAS AND IN THE EVENT THAT A DESIGN QUESTION SHOULD ARISE, OR A FIELD CONDITION PRESENT ITSELF THAT IS DIFFERENT THAN SHOWN ON THESE PLANS, WORK IN AFFECTED AREAS SHOULD CEASE AND THE ARCHITECT BE TIMELY NOTIFIED IN WRITING OF DETAILS OF SAID CONDITIONS SO THAT AN ACCEPTABLE SOLUTION CAN BE DETERMINED.
4. THE CONTRACTOR IS ADVISED TO CAREFULLY CHECK ALL PHASES OF WORK RELATING TO CBC/ADAS ACCESSIBILITY FOR THIS PROJECT. SINCE THE CODE DOES NOT ALLOW FOR A CONSTRUCTION TOLERANCE, ANY CONSTRUCTION THAT EXCEEDS MAXIMUM OR MINIMUM DIMENSIONS AND SLOPES AS CALLED OUT BY CONSTRUCTION-RELATED ACCESSIBILITY STANDARDS ARE THE SOLE RESPONSIBILITY OF THE CONTRACTOR AND ARE SUBJECT TO REJECTION BY THE CITY'S AUTHORIZED REPRESENTATIVE AND MAY BE REQUIRED TO BE TIMELY REMOVED AND REPLACED.
5. SINCE THE DESIGN PROFESSIONAL CANNOT CONTROL THE EXACT METHODS OR MEANS USED BY THE GENERAL CONTRACTOR OR THEIR SUB-CONTRACTOR DURING GRADING AND/OR CONSTRUCTION OF THE PROJECT, THE ARCHITECT / ENGINEER ASSUMES NO RESPONSIBILITY FOR FINAL ACCEPTANCE OF CBC/ADAS RELATED ITEMS.

## NORMAL WORKING HOURS

1. NORMAL WORKING HOURS ARE DEFINED AS THE TIME FROM 7:30 A.M. TO 4:00 P.M., MONDAY THROUGH FRIDAY, EXCLUDING LEGAL HOLIDAYS. THE CONTRACTOR SHALL NOT WORK ON THE PROJECT OUTSIDE NORMAL WORKING HOURS, UNLESS PRIOR APPROVAL IS OBTAINED FROM THE CITY OR WHEN SPECIFICALLY REQUIRED BY THE CITY. WORK OUTSIDE NORMAL WORKING HOURS WILL ONLY BE ALLOWED IF A CITY INSPECTOR IS AVAILABLE. THE CONTRACTOR SHALL PAY THE CITY FOR THE COST OF OVERTIME FOR CITY INSPECTION PERFORMED OUTSIDE OF NORMAL WORKING HOURS PER CITY STANDARD PROVISIONS.
2. EXCEPTION TO THE ABOVE WILL BE CONSIDERED ONLY WHEN, IN THE OPINION OF CITY'S AUTHORIZED REPRESENTATIVE, CONSTRUCTION DURING NORMAL CONSTRUCTION HOURS WOULD INCONVENIENCE THE PUBLIC AND NEIGHBORING RESIDENTS AND BUSINESSES MORE THAN WORKING OUTSIDE OF THESE HOURS. EXCEPTIONS WILL NOT BE GRANTED MERELY TO EXPEDITE THE CONSTRUCTION WORK.
3. NOTIFY ADJACENT PROPERTIES: CONTRACTOR SHALL NOTIFY THE ADJACENT SITE OPERATORS AND OWNERS IN WRITING DESCRIBING THE NATURE OF THE WORK, SCHEDULE OF THE WORK, WHEN PARKING WILL BE PROHIBITED (IF ANY), HOW AND WHEN ACCESS MAY BE AFFECTED, NATURE AND DURATION OF UTILITY INTERRUPTIONS AND WHO TO ALL AT THE CONTRACTOR'S OFFICE IF THEY HAVE QUESTIONS ABOUT THE WORK. THE CITY AND OWNER, PRIOR TO ITS DISTRIBUTION, MUST APPROVE THE NOTICE. THE CONTRACTOR MUST DISTRIBUTE THE NOTICE TO THE ADJACENT RESIDENCES AND BUSINESSES AT LEAST SEVEN DAYS PRIOR TO THE START OF THE CONSTRUCTION WORK. DURING THIS PROJECT, THE WORK AREA, PARKING PROHIBITION AND CONDITIONS AFFECTING ACCESS AND ANY OTHER REQUIREMENTS AND SCHEDULE SHALL BE DIVIDED UP INTO SMALLER, MORE MANAGEABLE AREAS ACCORDING TO WRITTEN AGREEMENT OF SCHEDULE AND RELATED CONDITIONS BETWEEN CITY'S AUTHORIZED REPRESENTATIVE AND CONTRACTOR. IN THE EVENT THE PARKING PROHIBITION OR ACCESS ENCUMBRANCES SCHEDULE CHANGES AFTER THE NOTIFICATION, CONTRACTOR SHALL POST A NEW NOTICE OF THE REVISED SCHEDULE AT LEAST 48 HOURS IN ADVANCE OF CONSTRUCTION.

## CONSTRUCTION TOLERANCES

1. ALL SLOPES SHOWN ON THIS PLAN WERE DESIGNED AT OR BELOW MAXIMUMS ALLOWED BY THE CALIFORNIA BUILDING CODE (CBC-2013) AND THE AMERICANS WITH DISABILITY ACT STANDARDS FOR ACCESSIBLE DESIGN (ADAS-2010) IN ORDER TO ALLOW FOR CONSTRUCTION TOLERANCES. IT IS THE CONTRACTOR'S RESPONSIBILITY TO FAMILIARIZE THEMSELVES WITH CBC/ ADAS AND IN THE EVENT THAT A DESIGN QUESTION SHOULD ARISE, OR A FIELD CONDITION PRESENT ITSELF THAT IS DIFFERENT THAN SHOWN ON THESE PLANS, WORK SHOULD CEASE AND THE ARCHITECT BE TIMELY NOTIFIED SO THAT AN ACCEPTABLE SOLUTION CAN BE DETERMINED.
2. THE CONTRACTOR IS ADVISED TO CAREFULLY CHECK ALL PHASES OF WORK RELATING TO CBC/ADAS ACCESSIBILITY FOR THIS PROJECT. SINCE THE CODE DOES NOT ALLOW FOR A CONSTRUCTION TOLERANCE, ANY CONSTRUCTION THAT EXCEEDS MAXIMUM OR MINIMUM DIMENSIONS AND SLOPES AS CALLED OUT BY CONSTRUCTION STANDARDS ARE SUBJECT TO REJECTIONS BY THE CITY'S AUTHORIZED REPRESENTATIVE AND MAY BE REQUIRED TO BE TIMELY REMOVED AND REPLACED.
3. SINCE THE DESIGN PROFESSIONAL CANNOT CONTROL THE EXACT METHODS OR MEANS USED BY THE GENERAL CONTRACTOR OR THEIR SUB-CONTRACTOR DURING GRADING AND CONSTRUCTION OF THE PROJECT. THE ARCHITECT / ENGINEER ASSUMES NO RESPONSIBILITY FOR FINAL ACCEPTANCE OF CBC/ADAS RELATED ITEMS.

## LIMITS OF CONSTRUCTION

1. CONFINE OPERATIONS TO AREAS WITHIN CONSTRUCTION WORK LIMITS AS DEFINED BY THE CITY'S AUTHORIZED REPRESENTATIVE.
2. WHERE CONSTRUCTION LIMITS SHOWN ON DRAWINGS EXTEND TO PROPERTY LINE, KEEP SIDEWALKS AND ROADWAYS IN THE PUBLIC RIGHT-OF-WAY FREE OF EQUIPMENT, MATERIALS, AND STOCKPILES.
3. THE LIMITS OF WORK MAY FROM TIME TO TIME BE MODIFIED TO ALLOW FOR THE ORDERLY PROGRESS OF THE WORK, THE ONGOING BUSINESS OPERATIONS OF OWNER'S BUSINESS TENANTS AT THE SITE AND PUBLIC ACCESS.
4. THE LIMITS OF WORK SHALL NOT EXTEND TO WITHIN ANY BUILDING.
5. THE LIMITS OF WORK SHALL NOT EXTEND TO OR OCCUR WITHIN THE PUBLIC RIGHT-OF-WAY UNLESS AN ENCROACHMENT PERMIT HAS FIRST BEEN SECURED FROM AGENCY HAVING JURISDICTION.
6. THE LIMITS OF THE WORK SHALL NOT AT ANY TIME OBSTRUCT OR HINDER ACCESSIBLE PATHS OF TRAVEL, PUBLIC ACCESS, OR EMERGENCY ACCESS. ENSURE ALTERNAT ROUTES AND ACCESS IS PROVIDED AND MAINTAINED AS NECESSARY FOR THE DURATION OF CONSTRUCTION.

## WORKMANSHIP

1. ALL CONTRACTORS AND SUBCONTRACTORS SHALL BE LICENSED IN ACCORDANCE WITH THE LAWS OF THE STATE OF CALIFORNIA AND THE UNITED STATES.
2. EXECUTE ALL WORK IN WORKMANLIKE MANNER AND COMPLY WITH LATEST INDUSTRY AND REFERENCED STANDARDS. FINISHED WORK SHALL PRESENT NEAT APPEARANCE AND BE COMPLETE.
3. THE CONTRACTOR SHALL FURNISH PROPER SUPERVISION ON THE JOB.
4. ALL WORK ACCOMPLISHED AND ALL MATERIALS FURNISHED UNDER THESE IMPROVEMENT STANDARDS SHALL BE SUBJECT TO THE INSPECTION AND APPROVAL OF CITY AGENCIES HAVING AUTHORITY. SUCH INSPECTION AND APPROVAL OF WORK AND MATERIALS SHALL NOT RELIEVE THE CONTRACTOR OF ANY OF HIS OR HER OBLIGATIONS TO COMPLETE THE WORK SPECIFIED ACCORDING O APPLICABLE STANDARDS. WORK AND MATERIALS NOT MEETING THESE REQUIREMENTS SHALL BE MADE GOOD AND UNSUITABLE WORK AND MATERIALS SHALL BE REJECTED.
5. THE CITY AGENCIES HAVING AUTHORITY SHALL HAVE ACCESS TO THE WORK AT ALL TIMES AND SHALL BE FURNISHED EVERY REASONABLE FACILITY FOR ASCERTAINING THAT THE METHODS, MATERIALS AND WORKMANSHIP ARE IN ACCORDANCE WITH THE REQUIREMENTS AND INTENT OF THESE IMPROVEMENT STANDARDS. THE CONTRACTOR OR HIS AUTHORIZED AGENT SHALL BE IN CHARGE OF AND RESPONSIBLE FOR ALL PHASES OF WORK WHILE IT IS IN PROGRESS.
6. CITY AGENCIES SHALL BE NOTIFIED AND CONTACTED BY THE CONTRACTOR AT LEAST FORTY-EIGHT (48) HOURS PRIOR TO BEGINNING ANY OF THE FOLLOWING STAGES OF WORK AND SHALL BE NOTIFIED WHEN EACH OF THE STAGES HAS BEEN COMPLETED, AND SUBSEQUENT STAGES SHALL NOT BE BEGUN WITHOUT APPROVAL OF THE CITY AGENCY. SHOULD THE CONTRACTOR FAIL TO SO NOTIFY AND CONTACT THE CITY AGENCY, THE COST OF ALL SUBSEQUENT INSPECTION AND TESTING NECESSARY TO ASCERTAIN IF THE WORK HAS MET ALL THE SPECIFIED REQUIREMENTS SHALL BE BORN BY THE CONTRACTOR OR THE WORK SHALL NOT BE APPROVED. ADDITIONALLY, THE DESIGN PROFESSIONAL SHALL BE REIMBURSED BY CONTRACTOR FOR ADDITIONAL WORK AS NECESSITATED BY CONTRACTOR'S FAILURE TO NOTIFY ACCORDING TO THESE PROVISIONS.

## PROTECTION

1. PROVIDE ALL NECESSARY COVERING, SHIELDING, SCREENING REQUIRED TO PROTECT ADJACENT CONSTRUCTION AND PROPERTY FROM DAMAGE DURING THE WORK OF THIS CONTRACT.
2. PROVIDE ALL FENCING AND BARRICADES REQUIRED TO PREVENT MATERIALS AND LABOR FORCES FROM DAMAGING EXISTING SITE AND INTERIOR AREAS DURING CONSTRUCTION.
3. PROTECT EXISTING LANDSCAPING AND IRRIGATION SYSTEMS FROM DAMAGE DURING CONSTRUCTION.
   A. PROVIDE BARRIERS, TREE FENCING AND TEMPORARY IRRIGATION WHERE NECESSARY.
   B. COORDINATE ALL SITE OPERATIONS WITH REGARD FOR EXISTING LANDSCAPING.
   C. REMOVAL OF PLANTS AND TURF MATERIALS SHOULD NOT BE NECESSARY IN THIS PROJECT.
   D. THE CONTRACTOR IS RESPONSIBLE FOR EXECUTING ALL SUCH WORK WHETHER OR NOT IT IS SPECIFIED.
4. ALL AVAILABLE RECORDS OF THE CITY AND UTILITY COMPANIES INVOLVED SHOULD BE INVESTIGATED BY THE CONTRACTOR. UTILITIES, SUBSTRUCTURES AND UNDERGROUND CONDITIONS ARE NOT SHOWN IN THESE PLANS. THE CONTRACTOR SHALL EXERCISE EXTREME CARE DURING EXCAVATION AND DURING THE COURSE OF THE PROJECT TO PREVENT DAMAGE TO EXISTING UNDERGROUND AND ABOVE GROUND UTILITIES AND IMPROVEMENTS. IT SHALL BE THE RESPONSIBILITY OF THE CONTRACTOR TO LOCATE ALL SUBSTRUCTURES WHETHER SHOWN ON THE PLANS OR NOT, AND PROTECT THEM FROM DAMAGE. THE CONTRACTOR SHALL BEAR THE TOTAL EXPENSE OF REPAIR OR REPLACEMENT OF SAID SUBSTRUCTURE BY THIS OPERATION IN CONNECTION WITH THE PROSECUTION OF THIS WORK. REPAIR AND RESTORATION SHALL BE TO THE SATISFACTION OF THE CITY'S AUTHORIZED REPRESENTATIVE OF SAID IMPROVEMENT. IF TIMELY REPAIR IS NOT PERFORMED, CITY'S AUTHORIZED REPRESENTATIVE MAY CONTRACT SEPARATELY FOR REPAIRS AND CHARGE THE CONTRACTOR.
5. THE CONTRACTOR SHALL BE LIABLE TO THE PROPERTY OWNER FOR ALL DAMAGE TO OWNER'S AND OWNER'S TENANTS PROPERTY RESPECTIVELY RESULTING FROM THE PERFORMANCE OF THIS CONTRACT. CONTRACTOR SHALL BE ENTIRELY RESPONSIBLE FOR THE CARE AND PROTECTION OF THE BUILDINGS AND PLANTER BEDS ADJACENT TO WORK AREAS. PROTECT EXISTING LANDSCAPING MATERIALS, TREES, APPURTENANCES, IRRIGATION SYSTEMS, SITE IMPROVEMENTS AND STRUCTURES UNLESS OTHERWISE INDICATED TO BE REMOVED.

## CUTTING, PATCHING AND REPAIRING

1. GENERAL:
   A. UNLESS SPECIFICALLY DESIGNATED OTHERWISE, EXISTING WORK, CUT, ALTERED, OR REVISED TO ACCOMMODATE NEW WORK, SHALL BE PATCHED TO DUPLICATE UNDISTURBED ADJACENT FINISHES, COLORS, TEXTURES AND PROFILES; NEW WORK IN EXISTING PORTIONS SHALL ALSO BE FINISHED TO MATCH ADJACENT EXISTING WORK UNLESS NOTED OTHERWISE.
   B. WHERE ALTERATION OR CONSTRUCTION WORK DISTURBS EXISTING ADJACENT FINISHES, REPLACE WITH LIKE FINISH MATCHING APPEARANCE, QUALITY, AND PERFORMANCE.
   C. SHOULD ANY EXISTING FINISH TO BE MATCHED BE "OUT-OF-PRODUCTION" OR OTHERWISE UNAVAILABLE MATERIAL, OBTAIN ARCHITECT'S SPECIFIC APPROVAL OF ANY SUBSTITUTION.
   D. FOR PATCHING, PROVIDE MATERIALS WHOSE INSTALLED PERFORMANCE WILL EQUAL OR SURPASS THAT OF EXISTING MATERIALS. FOR EXPOSED SURFACES, PROVIDE OR FINISH MATERIALS TO VISUALLY MATCH EXISTING ADJACENT SURFACES TO THE FULLEST EXTENT POSSIBLE.
   E. MATERIALS, ARTICLES, AND EQUIPMENT FURNISHED BY THE CONTRACTOR FOR INCORPORATION INTO THE WORK SHALL BE NEW. WHEN THE CONTRACT REQUIRES THAT MATERIALS, ARTICLES OR EQUIPMENT BE FURNISHED, BUT THE QUALITY OF KIND THEREOF IS NOT SPECIFIED, THE CONTRACTOR SHALL FURNISH MATERIALS, ARTICLES OR EQUIPMENT AT LEAST EQUAL TO THE KIND OR QUALITY OR BOTH OF SIMILAR MATERIALS, ARTICLES OR EQUIPMENT WHICH ARE SPECIFIED.
2. EXAMINATION AND PREPARATION:
   A. CONTRACTOR IS RESPONSIBLE FOR EXAMINING ALL AREAS, SURFACES, EXISTING AND NEW CONSTRUCTION PRIOR TO THE INSTALLATION OF ANY SUBSEQUENT CONSTRUCTION OR MATERIALS TO DETERMINE WHETHER THESE AREAS ARE READY TO RECEIVE SUBSEQUENT CONSTRUCTION.
   B. EXAMINE SUBSTRATES AND CONDITIONS FOR COMPLIANCE WITH MANUFACTURER'S WRITTEN REQUIREMENTS INCLUDING, BUT NOT LIMITED TO, SURFACES THAT ARE SOUND, LEVEL, AND PLUMB; SUBSTRATES WITHIN INSTALLATION TOLERANCES; SURFACES THAT ARE SMOOTH, CLEAN, AND FREE OF DELETERIOUS SUBSTANCES; AND APPLICATION CONDITIONS WITHIN ENVIRONMENTAL LIMITS. DO NOT PROCEED WITH INSTALLATION UNTIL UNSATISFACTORY CONDITIONS HAVE BEEN CORRECTED.
   C. INSTALLATION OF WORK OVER ANY SUBSTRATE BY ANY PERSONNEL REPRESENTS ACCEPTANCE OF THAT SUBSTRATE BY THE TRADE INSTALLING OVER SUBSTRATE.
   D. PREPARE SUBSTRATES AND ADJOINING SURFACES ACCORDING TO MANUFACTURER'S WRITTEN INSTRUCTIONS, INCLUDING, BUT NOT LIMITED TO, THE APPLICATION OF FILLERS AND PRIMERS.
3. INSTALLATION:
   A. CONTRACTOR IS RESPONSIBLE FOR MEANS AND METHODS AND THE PROPER INSTALLATION OF ALL MATERIALS, SYSTEMS, EQUIPMENT AND COMPONENTS.
   B. CONTRACTOR SHALL PROVIDE ADEQUATE INSPECTION, OBSERVATION, SUPERVISION AND MANAGEMENT AS NECESSARY TO INSURE THAT ALL SUCH COMPONENTS ARE INSTALLED IN A WORKMANLIKE MANNER, PROPERLY PER MANUFACTURERS' INSTRUCTIONS; IN ACCORDANCE WITH INDUSTRY STANDARDS AND APPLICABLE REGULATIONS.
   C. COMPLY WITH MANUFACTURER'S WRITTEN INSTRUCTIONS FOR INSTALLATION. APPLY FASTEN, ANCHOR EACH PRODUCT SECURELY IN PLACE, ACCURATELY LOCATED AND ALIGNED. CLEAN EXPOSED SURFACES AND PROTECT FROM DAMAGE. IF APPLICABLE, PREPARE SURFACES FOR FIELD FINISHING.
   D. CONTRACTOR SHALL INSURE THAT ALL MATERIALS, PRODUCTS AND ASSEMBLIES ARE INSTALLED ACCORDING TO THE FOLLOWING:
      i. TRUE, LEVEL, PLUMB AND SECURELY ATTACHED.
      ii. PROPERLY ALIGNED WITH SUBSTRATE, ADJACENT CONSTRUCTION AND RELATED PRODUCTS AND ASSEMBLIES.
      iii. FLUSH ALIGNED WITH AND CONFORM TO ADJACENT MATERIALS WHERE INDICATED.
      iv. MATERIALS, PRODUCTS AND ASSEMBLIES SHALL NOT BE INSTALLED DAMAGED, WARPED, DEFLECTED, DISTORTED, BENT, DENTED, SCRATCHED, SMUDGED, FINGERPRINTED, SMEARED, BINDING, JAMMED, TWISTED, FORCED, LOOSE, HANGING, OUT OF ALIGNMENT, UNANCHORED, STABLE, FIT FOR PURPOSE AND SUITABLE TO FULFILL THE DESIGN INTENT, ETC.
4. INCIDENTALS AND APPURTENANCES ASSOCIATED WITH CUTTING AND PATCHING:
   A. CONTRACTOR IS RESPONSIBLE FOR ALL INCIDENTAL ASPECTS OF THE WORK WHICH MAY REQUIRE CUTTING AND PATCHING BUT WHICH DO NOT SPECIFICALLY APPEAR ELSEWHERE IN THE DOCUMENTS.
   B. CONTRACTOR SHALL PROVIDE ALL INCIDENTAL OR REQUIRED CUTTING AND PATCHING OF MATERIALS, ASSEMBLIES AND COMPONENTS NOT COVERED EXPLICITLY OR IMPLICITLY IN OTHER SECTIONS OF THESE SPECIFICATIONS.
   C. WHERE INCIDENTAL CUTTING AND PATCHING IS REQUIRED FOR THE PROPER INSTALLATION OF A SPECIFIC ITEM OR PIECE OF EQUIPMENT (INCLUDING UTILITY COVERS, GRADE BOXES, EMBEDDED ITEMS, RELOCATION OF UTILITIES, INSTALLATION OF SLEEVES, PIPING, DUCTWORK, CONDUIT, ETC.), ALL SUCH CUTTING AND PATCHING IS CONSIDERED TO BE SPECIFIED AS A PART OF THE SECTION REQUIRING THE CUTTING AND PATCHING.
   D. CONTRACTOR IS RESPONSIBLE FOR ALL INCIDENTAL REPAIRS THAT MAY BE REQUIRED AS PART OF NORMAL OR DEFICIENT CONSTRUCTION OPERATIONS NOT COVERED ELSEWHERE IN THESE SPECIFICATIONS. THE CONTRACTOR IS RESPONSIBLE FOR EXECUTING ALL SUCH WORK WHETHER OR NOT IT IS SPECIFIED IN THESE DOCUMENTS.

## VERIFICATION OF CONDITIONS

1. VERIFICATION OF EXISTING CONDITIONS:
   A. USE OF EXISTING CONDITIONS DATA AS MAY BE INCLUDED OR IMPLIED IN THESE DOCUMENTS OR AS PROVIDED BY THE CITY'S AUTHORIZED REPRESENTATIVE OR OTHERS CONVEYS ACCEPTANCE AND AS SUCH DOES NOT RELIEVE THE CONTRACTOR FROM RESPONSIBILITY TO PERFORM AND COMPLETE THE WORK ACCORDING WITH THE SCOPE AND INTENT PROVIDED IN THESE DOCUMENTS AND REFERENCED STANDARDS, REGULATIONS AND CODES.
   B. CONTRACTORS, PRIOR TO BIDDING, SHALL VISIT THE SITE OF THE WORK AND FAMILIARIZE THEMSELVES THOROUGHLY WITH ALL EXISTING CONDITIONS AT THE SITE AND ITS IMPROVEMENTS.
   C. CONTRACTORS SHALL VERIFY LOCATIONS OF CONCEALED CONDITIONS THAT MAY AFFECT THE WORK PRIOR TO COMMENCING WORK IN AREAS AFFECTED.
   D. PROCEEDING WITH WORK SHALL INDICATE CONTRACTOR'S ACCEPTANCE OF SUCH CONDITIONS.
   C. DISCREPANCIES OR CONDITIONS THAT WOULD RENDER THE WORK NOT IN COMPLIANCE WITH APPLICABLE REGULATIONS OR THOSE THAT WOULD RESULT IN FINISHED WORK NOT IN ACCORDANCE WITH THE DESIGN INTENT HEREIN DESCRIBED SHALL BE IMMEDIATELY BROUGHT TO THE ATTENTION OF THE ARCHITECT IN WRITING.
2. VERIFICATION OF GRADES AND SLOPES:
   A. THE CONTRACTOR SHALL BE RESPONSIBLE FOR VERIFICATION OF ALL FINAL CONCRETE AND ASPHALT CONCRETE ELEVATIONS FOR NEW AND REPAIRED PAVED AREAS, FLATWORK, SIDEWALKS, RAMPS, LANDINGS, ETC. ALL NEW AND REPAIRED WALKS, SIDEWALKS, CROSSWALKS, CURB RAMPS, PEDESTRIAN RAMPS, LANDINGS, ETC. SHALL BE IN COMPLIANCE WITH THE MOST RESTRICTIVE PROVISIONS OF BOTH CALIFORNIA AND FEDERAL CONSTRUCTION-RELATED ACCESSIBILITY STANDARDS. ANY DISCREPANCIES SHALL BE REPORTED TO THE OWNER'S REPRESENTATIVE AND THE CONSULTING ARCHITECT PRIOR TO CONSTRUCTION. FAILURE TO DO SO DOES NOT RELIEVE THE CONTRACTOR FROM THE RESPONSIBILITY TO CORRECT ANY NON-COMPLYING CONSTRUCTION.
   B. VERIFY FINAL GRADES IN AND AROUND PARKING AREAS, DRAINAGE WAYS, DRAINAGE INLETS, FLATWORK, WALKS, SIDEWALKS, DOOR AND GATE LANDINGS AND APPROACHES, CURB RAMPS, CROSS WALKS AND ADJUST AREA CONFIGURATION, SLOPES, ELEVATIONS AND RAMP LENGTHS TO ACCOMMODATE REQUIRED SLOPES FOR ACCESSIBILITY AND PROPER DRAINAGE.
   C. THE FOLLOWING ARE MAX/MIN. GUIDELINES:
      i. ACCESSIBLE CURB RAMPS: SLOPE 8.33% (1:12) MAX. USE 7.5% OR LESS TO ACCOUNT CONSTRUCTION TOLERANCES. REFER TO DRAWINGS.
      ii. ACCESSIBLE CURB RAMP WIDTH: 4'-0" MINIMUM. REFER TO DRAWINGS.
      iii. ACCESSIBLE SIDEWALKS/FLATWORK OR PATH OF TRAVEL IN ONE DIRECTION: MAX. SLOPE 5% (1:20). MATCH EXISTING WIDTH (4'-0" MINIMUM). REFER TO DRAWINGS.
      iv. CROSS SLOPE (PERPENDICULAR TO PREDOMINANT DIRECTION OF TRAVEL): 2.0% MAX. (1:50). USE 1.5% OR LESS TO ACCOUNT FOR CONSTRUCTION TOLERANCES. REFER TO DRAWINGS. E. APPROACHES AND LANDINGS AT DOORS AND GATES: 2.0% MAX. (1:50). USE 1.5% OR LESS TO ACCOUNT FOR CONSTRUCTION TOLERANCES. REFER TO DRAWINGS.
   D. ALL EXISTING DRAINAGE COURSES ON THE PROJECT SITE MUST CONTINUE TO FUNCTION, ESPECIALLY DURING STORM CONDITIONS. PROTECTIVE MEASURES AND TEMPORARY DRAINAGE PROVISIONS MUST BE USED TO PROTECT ADJOINING PROPERTIES DURING GRADING OPERATIONS.
3. FIELD VERIFICATION OF DIMENSIONS:
   A. CONTRACTOR IS RESPONSIBLE TO ACHIEVE ALL DIMENSIONAL AND LOCATION INTENTIONS REPRESENTED ANYWHERE IN THE CONTRACT DOCUMENTS. CONTRACTOR SHALL PROVIDE ADEQUATE OBSERVATION AND SUPERVISION TO ENSURE THAT ALL INSTALLERS AND LABOR FORCES ADHERE TO LOCATION REQUIREMENTS SHOWN IN THE DOCUMENTS.
   B. CONTINUALLY CHECK AND COMPARE DIMENSIONS AT THE SITE WITH THOSE SHOWN ON THE DRAWINGS. IMMEDIATELY BRING DISCREPANCIES TO THE ATTENTION OF THE ARCHITECT IN WRITING.
   C. MARK ON SHOP DRAWINGS, PRIOR TO SUBMISSION TO THE ARCHITECT, ALL RELEVANT FIELD DIMENSIONS AND NOTE ANY CONFLICTS WITH THE SUBMITTED MATERIAL.
   E. THE CONTRACTOR SHALL MARK ALL REPAIR AREAS. A STRING LINE OR STRAIGHT EDGE SHOULD BE USED TO MARK STRAIGHT LINES AROUND THE REPAIR AREA. THE LINES SHOULD BE MARKED WITH SPRAY PAINT SO THEY ARE EASILY VISIBLE WHEN SAWING THE PAVEMENT. REPAIR AREAS SHOULD BE MARKED TO FORM A SQUARE OR RECTANGLE WITH AT LEAST 12 INCHES BEYOND THE DISTRESSED AREA. THE CONTRACTOR SHALL MEET WITH THE CITY'S AUTHORIZED REPRESENTATIVE AND REVIEW ALL REPAIR AREAS FOR OWNER'S WRITTEN APPROVAL. A SITE PLAN MARK-UP SIGNED BY CITY'S AUTHORIZED REPRESENTATIVE AND CONTRACTOR SHALL BE USED AS THE BASIS OF REPAIR SCOPE. PHOTOGRAPHS SHOULD ALSO BE USED TO DOCUMENT SCOPE AREAS.

## NOTIFICATION AND COORDINATION

1. NOTIFY UTILITY OWNERS: CONTRACTOR SHALL NOTIFY ALL PUBLIC OR PRIVATE UTILITY OWNERS 48 HOURS PRIOR TO COMMENCEMENT OF WORK ADJACENT TO ANY UTILITY THAT MAY BE AFFECTED BY THE WORK.
2. NOTIFY UTILITY USERS: CONTRACTOR SHALL NOTIFY IN WRITING ALL AFFECTED PARTIES 48 HOURS PRIOR TO COMMENCEMENT OF WORK WHICH MAY INTERRUPT A UTILITY DURING THE COURSE OF THE WORK. UTILITY INTERRUPTION SHALL BE REASONABLY AVOIDED AND KEPT TO A MINIMUM. UTILITY INTERRUPTIONS ARE NOT ALLOWED OVERNIGHT, OVER WEEKENDS OR HOLIDAYS UNLESS NOT WITHIN THE REASONABLE CONTROL OF THE CONTRACTOR.
3. COORDINATION WITH OTHER AGENCIES: THE CONTRACTOR SHALL BE RESPONSIBLE FOR COORDINATING INSPECTION PERFORMED BY OTHER GOVERNMENTAL AGENCIES, AS PRESCRIBED IN THEIR PERMITS AND APPROVALS.
4. COORDINATION WITH OTHER CONTRACTORS: WHERE TWO OR MORE CONTRACTORS ARE WORKING IN THE SAME AREA, EACH SHALL CONDUCT THEIR OPERATIONS IN SUCH A MANNER AS NOT TO CAUSE ANY UNNECESSARY DELAY OR HINDRANCE TO THE OTHER. WHERE CONFLICTS CANNOT BE AVOIDED, THE CITY'S AUTHORIZED REPRESENTATIVE WILL DETERMINE WHICH CONTRACTORS HAVE CONSTRUCTION PRIORITY OVER THE OTHER CONTRACTORS AND THE TERMS OF SUCH CONSTRUCTION PRIORITY.

5. COORDINATION OF TRADES AND MATERIALS:
   EXAMINATION AND PREPARATION
   A. CONTRACTOR IS RESPONSIBLE FOR EXAMINING ALL AREAS, SURFACES, EXISTING AND NEW CONSTRUCTION PRIOR TO THE INSTALLATION OF ANY SUBSEQUENT CONSTRUCTION OR MATERIALS TO DETERMINE WHETHER THESE AREAS ARE READY TO RECEIVE SUBSEQUENT CONSTRUCTION.
   B. EXAMINE SUBSTRATES AND CONDITIONS FOR COMPLIANCE WITH MANUFACTURER'S WRITTEN REQUIREMENTS INCLUDING, BUT NOT LIMITED TO, SURFACES THAT ARE SOUND, LEVEL, AND PLUMB; BASE COURSE, EXISTING SURFACES, SUBSTRATES WITHIN INSTALLATION TOLERANCES; SURFACES THAT ARE SMOOTH, CLEAN, AND FREE OF DELETERIOUS SUBSTANCES; AND APPLICATION CONDITIONS WITHIN ENVIRONMENTAL LIMITS. DO NOT PROCEED WITH INSTALLATION UNTIL UNSATISFACTORY CONDITIONS HAVE BEEN CORRECTED.
   C. INSTALLATION OF WORK OVER ANY BASE CONDITION, SUBSTRATE OR EXISTING CONDITION BY ANY PERSONNEL REPRESENTS ACCEPTANCE OF THAT BASE CONDITION, SUBSTRATE OR EXISTING CONDITION BY THE TRADE INSTALLING OVER THAT BASE CONDITION, SUBSTRATE OR EXISTING CONDITION.
   D. PREPARE BASE CONDITIONS, SUBSTRATES AND OTHER SURFACES ALONG WITH THEIR ADJOINING SURFACES ACCORDING TO MANUFACTURER'S WRITTEN INSTRUCTIONS, INCLUDING, BUT NOT LIMITED TO, THE REMOVAL OF SUBSTANDARD CONDITIONS, AND THE PREPARATION OF SURFACES ADEQUATE AND COMPATIBLE TO RECEIVE NEW WORK AND REPAIRS. APPLICATION OF FILLERS, PRIMERS AND APPURTENANCES REQUIRED BY INDUSTRY STANDARDS AND MANUFACTURER'S INSTALLATION INSTRUCTIONS.
   E. CONTRACTOR IS RESPONSIBLE TO INSURE THAT ALL CONSTRUCTION SEQUENCES OCCUR OVER AREAS THAT HAVE BEEN COMPLETED AND ARE PHYSICALLY CAPABLE OF ACCEPTING SUBSEQUENT CONSTRUCTION.
   F. CONTRACTOR IS REQUIRED TO INSURE THAT ALL FABRICATORS, INSTALLERS AND LABOR FORCES PREPARE WORK IN PROPER SEQUENCE AND METHOD TO ACHIEVE COMPLETED WORK OF QUALITY AND DURABILITY INTENDED BY THE CONTRACT DOCUMENTS.
   G. CONTRACTOR IS RESPONSIBLE FOR SCHEDULING AND OBTAINING APPROVAL FROM AGENCY INSPECTOR FOR WORK THAT WILL BE COVERED BY SUBSEQUENT CONSTRUCTION.
   H. CONTRACTOR IS RESPONSIBLE FOR COORDINATION OF THE PHYSICAL LOCATION OF COMPONENTS PROVIDED AND INSTALLED BY VARIOUS TRADES.
   I. COORDINATION SHALL BE BASED ON THE UNDERSTANDING OF EACH TRADE OF THE REQUIREMENTS FOR CLEARANCES, ACCESS, AND FUNCTIONAL CHARACTERISTICS OF OTHER ITEMS. INSTALLATION BY ANY TRADE SHALL IN NO WAY LIMIT THE FUNCTIONAL PERFORMANCE OF ANY OTHER ITEM.
   J. CONTRACTOR SHALL INSURE THAT INSTALLATION LOCATIONS OF TRADE ITEMS DO NOT CONFLICT WITH THE ITEMS OF OTHER TRADES AND DO NOT PREVENT THE INSTALLATION OF ITEMS FROM OTHER TRADES AS REQUIRED BY THESE DOCUMENTS.
   K. CONTRACTOR IS RESPONSIBLE FOR THE RELOCATION AND REINSTALLATION OF ANY ITEM INSTALLED WITHOUT REGARD FOR THE SUBSEQUENT INSTALLATION OF WORK BY ANOTHER TRADE.
   L. FOR CONFLICTS BASED ON CONFLICTS IN THESE DOCUMENTS, THE CONTRACTOR SHALL NOTIFY THE ARCHITECT REQUESTING RESOLUTION. FOR ALL OTHER CONFLICTS BASED ON ERRONEOUS INSTALLATION BY A TRADE, THE CONTRACTOR SHALL TAKE CORRECTIVE ACTION SO AS NOT TO DELAY THE PROGRESS OF THE WORK AT NO ADDITIONAL COST.

## DUST CONTROL

1. AT ALL TIMES DURING CONSTRUCTION AND UNTIL FINAL COMPLETION AND ACCEPTANCE OF THE WORK, THE CONTRACTOR SHALL PREVENT THE FORMATION OF AN AIRBORNE DUST NUISANCE IN SUCH A MANNER THAT IT WILL CONTAIN DUST PARTICLES TO THE IMMEDIATE SURFACE OF THE WORK PER SECTION 5-10 OF THE CALTRANS STANDARD PROVISIONS. THE CONTRACTOR SHALL PERFORM SUCH TREATMENT WITHIN TWO HOURS AFTER NOTIFICATION BY THE CITY THAT AN AIRBORNE NUISANCE EXISTS.
2. THE CITY'S AUTHORIZED REPRESENTATIVE OR CITY ENGINEER MAY REQUIRE THE SUBMITTAL OF A DUST PREVENTION AND CONTROL PLAN FOR GRADING AND CONSTRUCTION AS DEEMED NECESSARY. AT THE VERY MINIMUM THE FOLLOWING CONDITIONS CONCERNING THE CONTROL OF GRADING AND CONSTRUCTION DUST SHALL BE ADHERED TO, AS WELL AS FOLLOWING BAY AREA AIR QUALITY MANAGEMENT DISTRICT AND NORTHERN SONOMA COUNTY AIR POLLUTION CONTROL DISTRICT REQUIREMENTS WITH REGARDS TO FUGITIVE DUST.
2. FUGITIVE DUST EMISSIONS SHALL BE CONTROLLED TWENTY-FOUR (24) HOURS A DAY, SEVEN (7) DAYS A WEEK, WHETHER OR NOT THERE IS CURRENT ACTIVITY ON THE SITE. THERE SHALL BE A 24-HOUR CONTACT NAME AND PHONE NUMBER FOR THE PERSON RESPONSIBLE FOR ENSURING THE CONTROL OF FUGITIVE DUST, WHETHER OR NOT THERE IS CURRENT ACTIVITY AT THE SITE.
3. DUST CONTROL MEASURES SHALL INCLUDE, BUT ARE NOT LIMITED TO THE APPLICATION OF SUCH MEASURES AS WATER OR DUST PALLIATIVES, THE INSTALLATION OF WIND FENCING, AND THE TREATMENT OF STAGING AREAS.
4. WHEN AN ENTIRE PROJECT IS GRADED AND THE SUBSEQUENT CONSTRUCTION ON THE SITE IS TO BE COMPLETED IN PHASES, THE PORTION OF THE SITE NOT UNDER CONSTRUCTION SHALL BE TREATED WITH CHEMICAL STABILIZERS, OR PLANT MATERIALS AND AN IRRIGATION SYSTEM.
5. IF THE IMPORTING OR EXPORTING OF SOIL IS NECESSARY, DUST CONTROL SHALL INCLUDE PROCEDURES FOR THE CONTROL OF DUST RESULTING FROM THE LOADING, TRANSPORTATION AND UNLOADING OF SOIL FROM, TO OR WITHIN THE PROJECT AREA AND ON PUBLIC ROADWAYS.
6. ALL DEMOLITION, GRADING, EXCAVATION, GRINDING AND CUTTING OPERATIONS THAT GENERATE EXCESSIVE DUST SHALL CEASE IF WIND VELOCITIES EXCEED 25 MPH, THE SITE SHALL BE KEPT REGULARLY WATERED TO MITIGATE BLOWING DUST FOR THE DURATION OF THE HIGH WINDS.

## SITEWORK

1. CONTACT USA: CONTRACTOR SHALL CONTACT USA (UNDERGROUND SERVICE ALERT) AT (800) 642-2444 AT LEAST 2 WORKING DAYS BUT NOT MORE THAN 14 DAYS PRIOR TO COMMENCING EXCAVATION WORK TO VERIFY EXISTING UNDERGROUND UTILITIES, PER CHAPTER 3.1, DIVISION 5, TITLE 1 OF THE GOVERNMENT CODE.
2. PROVIDE AND MAINTAIN ACCESS TO FIRE HYDRANTS, FREE OF OBSTRUCTIONS.
3. AT ALL TIMES DURING THE COURSE OF CONSTRUCTION BUSINESS OPERATORS AND OWNER SHALL HAVE REASONABLE ACCESS TO THEIR PREMISES. BUSINESS INTERRUPTIONS SHALL BE COORDINATED IN ADVANCE WITH ALL AFFECTED PARTIES AND SCHEDULED TO MINIMIZE DISRUPTION OF ONGOING BUSINESS ACTIVITIES. NOTICES, SCHEDULE AND AGREEMENTS SHALL BE IN WRITING. ACCESS SHALL BE REASONABLY PROVIDED BY CONTRACTOR TO AFFORD PATRONS AND VISITORS ACCESS IN COMPLIANCE WITH STATE AND FEDERAL ACCESSIBILITY STANDARDS.
4. THE CONTRACTOR WILL BE RESPONSIBLE FOR ALL VEHICLE AND PEDESTRIAN TRAFFIC CONTROL OR REROUTING AS IS NECESSARY TO CARRY OUT THE REQUIRED WORK AND ACHIEVE THE FINISHED PRODUCTS REQUIRED IN THE CONTRACT.
5. ALL WORK SHALL BE PLANNED AND CARRIED OUT SO THAT THERE WILL BE THE LEAST POSSIBLE INCONVENIENCE TO EXISTING BUSINESS OPERATIONS, THE PUBLIC, AND TRAFFIC SHALL NOT BE UNREASONABLY DELAYED. DRIVEWAY ACCESS SHALL BE MAINTAINED TO THE PROPERTY AT ALL TIMES. SEQUENCE DEMOLITION AND CONSTRUCTION ACTIVITIES TO ALLOW OWNER AND BUSINESS TENANTS THE OPERATIONAL ABILITY TO CONTINUE ONGOING OPERATIONS.
6. GARBAGE ROUTE OPERATIONS: FOR ANY ON-SITE WORK ON OR ADJACENT TO GARBAGE AND RECYCLING COLLECTION ROUTES, THE CONTRACTOR SHALL ALLOW GARBAGE TRUCKS TO SAFELY PASS THROUGH THE CONTRACTOR'S SITE AT ALL TIMES, UNLESS AN EXCEPTION IS GRANTED BY THE CITY. IN THE ALTERNATIVE, GARBAGE AND RECYCLING CONTAINERS CAN BE TEMPORARILY RELOCATED TO APPROVED ON-SITE LOCATIONS AS COORDINATED IN ADVANCE WITH OWNER'S ON-SITE BUSINESS TENANTS.
7. BUSINESS OPERATIONS: FOR ANY ON-SITE WORK ON OR ADJACENT TO EXISTING BUSINESS TENANT SPACES, CONTRACTOR'S WORK SHALL NOT INTERFERE WITH TRUCK DELIVERY OPERATIONS NECESSARY FOR TENANT'S NORMAL OPERATIONS. COORDINATE ALL CONSTRUCTION WORK IN ADVANCE WITH OWNER'S ON-SITE BUSINESS TENANTS SO AS TO NOT UNDULY INTERFERE WITH TRUCK DELIVERIES TO TENANT BUSINESSES.

## CONSTRUCTION WASTE

CONSTRUCTION WASTE MANAGEMENT AND DISPOSAL

1. THE WORK SHALL BE ACCOMPLISHED GIVING REASONABLE CONSIDERATION TO THE MOST ENVIRONMENTALLY CONSCIOUS WORK FEASIBLE WITHIN THE LIMITS OF THE CONSTRUCTION SCHEDULE, CONTRACT SUM, AND AVAILABLE MATERIALS, EQUIPMENT, AND PRODUCTS.
2. PARTICIPATE IN PROMOTING EFFORTS OF OWNER AND THE COMMUNITY TO CONDUCT THE WORK AND PROVIDE WORK PRODUCT IN AN ENERGY-EFFICIENT AND ENVIRONMENTALLY-SENSITIVE MANNER.
3. USE RECYCLED-CONTENT, TOXIC-FREE, AND ENVIRONMENTALLY-SENSITIVE MATERIALS AND EQUIPMENT WHEN POSSIBLE.
4. USE ENVIRONMENTALLY-SENSITIVE PROCEDURES.
5. PROTECT THE ENVIRONMENT, BOTH ON-SITE AND OFF-SITE, DURING DEMOLITION AND CONSTRUCTION OPERATIONS.
6. PREVENT ENVIRONMENTAL POLLUTION AND DAMAGE.
7. EFFECT OPTIMUM CONTROL OF SOLID WASTES BY USE OF RECYCLING AND APPROPRIATE ND LAWFUL LANDFILL DIVERSION METHODS.
8. COMPLY WITH LOCAL AND REGIONAL AIR/WATER QUALITY CONTROL STANDARDS.
9. COMPLY WITH LOCAL AND REGIONAL CONSTRUCTION WASTE AND DEBRIS REGULATIONS.

## HAZARDOUS MATERIALS

1. ALL WORK SHALL BE CONDUCTED IN A MANNER WHICH PREVENTS THE RELEASE OF HAZARDOUS MATERIALS OR HAZARDOUS WASTE TO THE SOIL OR GROUNDWATER, AND MINIMIZES THE DISCHARGE OF HAZARDOUS MATERIALS, HAZARDOUS WASTES, POLLUTED WATER AND SEDIMENTS TO ANY STORM DRAIN SYSTEM. CONTRACTOR IS RESPONSIBLE FOR PROVIDING AND MAINTAINING ADEQUATE PREVENTION METHODS AND SYSTEMS.
2. NOTIFICATION. IN DANGEROUS SITUATIONS, CALL 911: IF ANY DAMAGE OCCURS TO ANY FACILITY THAT RESULTS IN THE ESCAPE OF ANY FLAMMABLE, TOXIC OR CORROSIVE GAS OR LIQUID OR ENDANGERS LIFE, HEALTH OR PROPERTY, THE CONTRACTOR SHALL IMMEDIATELY CALL THE 911 EMERGENCY TELEPHONE NUMBER TO NOTIFY LOCAL PUBLIC SAFETY OFFICIALS; IMMEDIATELY NOTIFY ANYONE IN THE VICINITY THAT COULD BE AFFECTED AND THEN IMMEDIATELY THEREAFTER NOTIFY THE UTILITY CITY'S AUTHORIZED REPRESENTATIVE AND FACILITY OWNER.
3. NOTIFY CITY'S AUTHORIZED REPRESENTATIVE AND OWNER'S TENANTS ONE WEEK PRIOR TO ANY OPERATIONS THAT WILL INVOLVE FUMES OR NOISE, SUCH AS JACK HAMMERS AND PAVEMENT CUTTING TOOLS THAT MAT BE CONSIDERED A NUISANCE TO ONGOING BUSINESS OPERATIONS, THE PUBLIC AND TO NEIGHBORS.

## TEMPORARY FACILITIES & CONTROLS

1. THE CONTRACTOR MUST PROVIDE ALL TEMPORARY FACILITIES AND SERVICES REQUIRED TO COMPLETE THE WORK AND TO COMPLY WITH OSHA AND OTHER APPLICABLE REGULATIONS.
2. THE CONTRACTOR MUST MAINTAIN TEMPORARY FACILITIES IN A PROPER, SAFE, OPERATING AND SANITARY CONDITION FOR THE DURATION OF THIS CONTRACT. UPON COMPLETION OF THIS CONTRACT, ALL SUCH TEMPORARY WORK AND FACILITIES SHALL BE REMOVED IN THEIR ENTIRETY.
3. MAINTAIN TRAFFIC CONTROL DEVICES: TRAFFIC CONTROL THE SAFE MOVEMENT OF TRAFFIC THROUGH CONSTRUCTION AREAS DEPENDS UPON COMMUNICATING CONCISE AND PROPER INFORMATION TO THE PUBLIC BY SIGNS, BARRICADES, DELINEATORS, FLAGMEN AND WARNING LIGHTS. ALL SUCH DEVICES NECESSARY DURING CONSTRUCTION SHALL BE FURNISHED BY THE CONTRACTOR.
4. THE CONTRACTOR SHALL INSTALL AND MAINTAIN FENCES, BARRIERS, BARRICADES, ACCESSIBLE SAFETY MEASURES, LIGHTS AND SIGNS THAT ARE NECESSARY TO GIVE ADEQUATE WARNING TO AND PROVIDE FOR THE SAFETY OF THE PUBLIC AT ALL TIMES IN ACCORDANCE WITH THE CALIFORNIA DEPARTMENT OF TRANSPORTATION'S TRAFFIC CONTROL MANUAL. THE SIZE, SHAPE AND COLOR OF SUCH DEVICES AS SHOWN HEREIN SHALL BE AS REQUIRED BY THE STATE OF CALIFORNIA, DEPARTMENT OF TRANSPORTATION.
5. BARRIERS:
   A. PROVIDE BARRIERS TO PREVENT UNAUTHORIZED ENTRY TO CONSTRUCTION AREAS AND TO PROTECT EXISTING FACILITIES AND ADJACENT PROPERTIES FROM DAMAGE FROM CONSTRUCTION OPERATIONS AND DEMOLITION.
   B. PROVIDE PROTECTION FOR PLANTS DESIGNATED TO REMAIN. REPLACE DAMAGED PLANTS.
   C. PROTECT NON-OWNED VEHICULAR TRAFFIC, STORED MATERIALS, SITE, AND STRUCTURES FROM DAMAGE.
6. TRAFFIC CONTROL GENERAL TRAFFIC CONTROL:
   A. THE CONTRACTOR SHALL FURNISH AND PLACE, WITHOUT EXTRA COMPENSATION, ALL NECESSARY WARNING AND DIRECTION SIGNS TO MAINTAIN TRAFFIC AND SHALL PROVIDE SUCH PROTECTION TO NEW PAVEMENT, PAVEMENT MARKINGS, AND OTHER CONSTRUCTION UNTIL FULLY CURED/DRY/HARDENED ETC. AND PEDESTRIAN AND VEHICULAR TRAFFIC CAN CROSS SUCH ITEMS WITHOUT DAMAGE.
   B. THE CONTRACTOR SHALL PROVIDE AND MAINTAIN SUFFICIENT NOTICE SIGNS, FENCES, BARRICADES AND DIRECTIONAL SIGNS FOR DETOURS AND ACCESS AROUND THE WORK ZONE AND SUCH SHALL BE ADJUSTED THROUGHOUT THE COURSE OF CONSTRUCTION TO MAINTAIN SAFE AND ORDERLY ONGOING OPERATIONS. WORK AREAS SHALL BE BARRICADED, FENCED AND CONED AS APPROPRIATE AND SUFFICIENTLY ADEQUATE TO PROTECT WORKERS AND NEW WORK. SEQUENCE WORK SUCH THAT DISCRETE PORTIONS OF THE WORK CAN BE ACCOMPLISHED EFFICIENTLY AND EFFECTIVELY. ADEQUATE SPACE SHALL BE PROVIDED SO THAT AT A MINIMUM ONE ACCESS LANE OF PEDESTRIAN AND VEHICULAR TRAFFIC WITH APPROPRIATE CONTINUITY CAN BE MAINTAINED. ALL SIGNS AND CONES SHALL REMAIN IN PLACE UNTIL PEDESTRIAN AND VEHICULAR TRAFFIC CAN CROSS NEW WORK WITHOUT DEFORMATION, DAMAGE, TRACKING, DISCOLORATION OR OTHER DETRIMENTAL RESULTS.
   C. THE CONTRACTOR SHALL PLACE APPROPRIATE TRAFFIC CONTROL SIGNING AND BARRICADES FAR ENOUGH IN ADVANCE OF THE WORK TO INSURE THAT VEHICLES ARE NOT PARKED IN THE WORK AREA. THE CONTRACTOR WILL BE ALLOWED TO ONLY PROHIBIT PARKING FOR A MAXIMUM OF HALF THE PARKING CAPACITY AT A TIME FOR EACH SEGMENT OF WORK. AT NO TIME SHALL PEDESTRIAN OR VEHICULAR TRAFFIC BE UNDULY HAMPERED OR DELAYED BY THE WORK IN PROGRESS.
   D. THE CONTRACTOR SHALL SUBMIT FOR OWNER'S REVIEW AND APPROVAL A TRAFFIC CONTROL AND SEQUENCING PLAN IDENTIFYING CONTRACTOR'S OPERATIONS, ON-SITE EQUIPMENT AND MATERIAL STORAGE, LAY DOWN AREA, REFUSE BIN, AND PROVISIONS FOR ONGOING BUSINESS OPERATIONS OF OWNER'S TENANTS, PUBLIC PARKING AND SAFE PUBLIC ACCESS AND ACCESS TO THE SITE BY EMERGENCY VEHICLES AND EMERGENCY RESPONSE PERSONNEL. TRAFFIC CONTROL PLANS SHALL BE IN ACCORDANCE WITH THE CALIFORNIA MANUAL OF UNIFORM TRAFFIC CONTROL DEVICES (MUTCD), LATEST EDITION. THE CITY MAY ESTABLISH OTHER SUCH STANDARDS AND SPECIFICATIONS NECESSARY FOR THE PROPER CONSTRUCTION, SAFETY REQUIREMENTS, USE AND MAINTENANCE OF ENCROACHMENTS.
7. MAINTENANCE OF EQUIPMENT:
   A. ALL EQUIPMENT SHALL BE MAINTAINED IN GOOD ORDER PER THE STANDARD SPECIFICATIONS. SUBSTANDARD OR UNSUITABLE PAVING EQUIPMENT WILL NOT BE ALLOWED.
   B. NO MATERIAL OR EQUIPMENT SHALL BE STORED IN THE PUBLIC RIGHT-OF-WAY.
   C. INTERMITTENT MOVEMENT OF EQUIPMENT ASSOCIATED WITH COMPLETING OF THE WORK ACROSS THE PUBLIC RIGHT-OF-WAY DURING "NORMAL WORKING HOURS" IS ALLOWED.
   D. TRACKING OF MATERIALS, STAINS, OR OTHER DAMAGE TO SUCH AREAS SHALL BE PROMPTLY REPAIRED AND RESTORED TO THE SATISFACTION OF THE JURISDICTION.
8. MAINTENANCE OF WORK SITE:
   A. THE CONTRACTOR SHALL KEEP THE STREET AND WORK SITE CLEAN AND FREE FROM RUBBISH AND DEBRIS. THIS PROVISION REQUIRES PREVENTING SPILLAGE ON HAUL ROUTES, CLEANING UP SPILLAGE, SWEEPING ALL STREETS OF MUD, DIRT AND DEBRIS THAT ARE A RESULT OF THE CONTRACTOR'S WORK AND KEEPING THE WORK SITE IN A CLEAN AND NEAT APPEARANCE. ANY SPILLAGE ON HAUL ROUTES SHALL BE IMMEDIATELY REMOVED AND CLEANED UP.
   B. THE CONTRACTOR AT ALL TIMES MUST MAINTAIN GOOD HOUSEKEEPING PRACTICES TO REDUCE THE RISK OF FIRE DAMAGE. ALL SCRAP MATERIALS, RUBBISH AND TRASH MUST BE REMOVED DAILY FROM IN AND ABOUT THE SITE OF THE WORK AND THE CONTRACTOR MUST NOT PERMIT THEM TO BE SCATTERED ON ADJACENT AREAS.
   C. PROGRESS CLEANING AND WASTE REMOVAL A. MAINTAIN AREAS FREE OF WASTE MATERIALS, DEBRIS, AND RUBBISH. MAINTAIN SITE IN CLEAN AND ORDERLY CONDITION.
   D. COLLECT AND REMOVE WASTE MATERIALS, DEBRIS, AND RUBBISH FROM SITE PERIODICALLY AND DISPOSE OFF-SITE.
9. CONTRACTOR SHALL PREVENT TRACKING OF ASPHALT AND ASPHALTIC MATERIALS ONTO ADJACENT SURFACES TO REMAIN UNLESS THOSE SURFACES ARE SCHEDULED FOR REPAVING OR APPLICATION OF A SLURRY SEAL AS PART OF THE SCOPE OF WORK IN THIS PROJECT.
10. COST OF REPAIR, CLEANING OR OTHER SUITABLE REMEDIATION TO THE SATISFACTION OF THE CITY'S AUTHORIZED REPRESENTATIVE OF THE AFFECTED AREA SHALL BE THE RESPONSIBILITY OF THE CONTRACTOR.
11. PAVEMENT STRIPING DAMAGE: PAVEMENT STRIPING SCHEDULED TO REMAIN (ON AND OFF-SITE) THAT IS DAMAGED AS A RESULT OF THE CONTRACTOR'S OPERATIONS SHALL BE REPLACED IN KIND BY THE CONTRACTOR.
12. CLEANING SITE UPON NOTICE: WHEN ORDERED BY THE CITY OR THE OWNER, THE CONTRACTOR SHALL CLEAN UP THE WORK SITE WITHIN 24 HOURS AFTER RECEIVING SUCH NOTICE.

## STANDARDS, REGULATIONS & CODES

1. ALL WORK AND MATERIAL SHALL CONFORM TO THE REQUIREMENTS OF THE DRAWINGS AND SPECIFICATIONS, THE CALIFORNIA BUILDING CODE (2013), AMERICANS WITH DISABILITIES ACT ACCESSIBILITY GUIDELINES (2010) AND WITH LOCAL AND STATE ORDINANCES HAVING JURISDICTION, WHICHEVER IS MOST STRINGENT. NOTHING IN DRAWINGS OR SPECIFICATIONS SHALL BE CONSTRUED AS PERMITTING ANY VIOLATION OF APPLICABLE, PREVAILING RULES, STANDARDS, CODES, REGULATIONS AND REQUIREMENTS.
2. ALL WORK, MATERIAL, AND EQUIPMENT SHALL CONFORM TO THE CITY OF SUNNYVALE STANDARD PLANS AND SPECIFICATIONS, CONTRACT SPECIFICATIONS, CALTRANS STANDARD PLANS, AND MANUAL FOR TRAFFIC CONTROLS FOR CONSTRUCTION AND MAINTENANCE WORK ZONES.
3. REFER ALSO TO THE FOLLOWING CITY OF SUNNYVALE ZONING ORDINANCE: 20.36.070 - GENERAL PARKING REGULATIONS
4. THE CONTRACTOR SHALL COMPLY WITH THE PROVISIONS OF ALL PERMITS, LICENSES OR OTHER AUTHORIZATIONS APPLICABLE TO THE WORK WITH RESPECT TO THE CALIFORNIA ENVIRONMENTAL QUALITY ACT.
5. REQUIRED IMPROVEMENT WORK SHALL BE DONE IN ACCORDANCE WITH THE ABOVE APPLICABLE SECTIONS OF THESE IMPROVEMENT STANDARDS, LATEST EDITION. OTHER SPECIAL PROVISIONS PREPARED BY THE DESIGN PROFESSIONAL AND APPROVED BY THE CITY ENGINEER ALSO APPLY AS NECESSARY FOR THE SUCCESSFUL COMPLETION OF THE REQUIRED WORK. WHERE ANY DISCREPANCY OCCURS, THE MOST STRINGENT REGULATION OR STANDARD SHALL APPLY.


Craig D. Williams
Architecture
Interiors
Planning
Project
Management

295 Neva Street
Sebastopol, CA
95472
(707) 400-8325 (m)
(707) 823-2724 (o)
ArchWiseDesign@Gmail.com



Drawings, specifications and all ideas, designs, and arrangements indicated on these drawings and specifications are and shall remain the property of Craig Williams, architect and are intended to be used in connection with this specific project only. No part shall be copied or disclosed to others or otherwise be used in connection with any other work or project other than the specified work for which they have been prepared without the written consent of the architect. There shall be no changes or deviations from these drawings or the accompanying specifications without the written consent of the architect.

THESE DRAWINGS ARE INSTRUMENTS OF SERVICE AND ARE THE SOLE PROPERTY OF CRAIG D. WILLIAMS, ARCHITECT, COPYRIGHT © 2014-2015

Visual contact with these plans and specifications shall constitute conclusive evidence of acceptance of these restrictions.


CRAIG D. WILLIAMS
NOT FOR CONSTRUCTION UNLESS SIGNED BY THE ARCHITECT AND APPROVED BY JURISDICTIONS HAVING AUTHORITY

LICENSED ARCHITECT
CRAIG DOUGLAS WILLIAMS
No. C026642
REN. 10-31-17
STATE OF CALIFORNIA

08.21.2016

ACCESSIBILITY UPGRADES
IVES POOL
AND POOL HOUSE
7400 WILLOW STREET
SEBASTOPOL, CA

PROJECT NUMBER:
082515.00
DATE:
26 JULY, 2016
DRAWN BY:
CW
CHECKED BY:
CW
REVISIONS:

GENERAL NOTES
ACCESSIBILITY NOTES

**T0.2**


© THESE DRAWINGS ARE INSTRUMENTS OF SERVICE AND ARE THE SOLE PROPERTY OF CRAIG WILLIAMS ARCHITECT. ANY USE WITHOUT WRITTEN CONSENT IS PROHIBITED.

Aug 23, 2016 - 10:28am cwilliams C:\Documents and Settings\cwilliams\Desktop\CLIENTS\SEBASTOPOL CITY\IVES\CD-T0.2.dwg

# GENERAL NOTES

1. EXISTING UTILITIES: PURSUANT TO CALIFOIR NIA GOVERNMENT CODE SECTION 4216.6(a)(1)THE CONTRACTOR SHALL BE RESPONSIBLE FOR CONTACTING ALL UTILITY COMPANIES AND "DIG ALERT" (DIAL 811) TO LOCATE ALL EXISTING UTILITIES WITHIN THE CONSTRUCTION AREA PRIOR TO CONSTRUCTION. CONTRACTOR SHALL VERIFY THE HORIZONTAL AND VERTICAL LOCATION OF ALL EXISTING UTILITIES PRIOR TO COMMENCING CONSTRUCTION. THE CONTRACTOR SHALL BE RESPONSIBLE FOR PROTECTING ALL EXISTING UTILITIES DURING CONSTRUCTION AND RESETTING UTILITIES TO NEW GRADE AND SLOPE WITHIN THE LIMITS OF CONSTRUCTION.

2. SAFETY: THE CONTRACTOR SHALL BE RESPONSIBLE FOR COMPLYING WITH THE PROVISIONS OF THE CALIFORNIA OCCUPATIONAL SAFETY AND HEALTH (CalOSHA) TRENCH SAFETY/INDUSTRIAL SAFETY ORDERS AND INDUSTRY REQUIREMENTS. THE CONTRACTOR SHALL BE RESPONSIBLE FOR TAKING ALL NECESSARY PRECAUTIONS WHEN WORKING IN THE VICINITY OF AT GRADE UTILKITIES, UNDERGROUND UTILITIES AND OVERHEAD ELECTRIC CONDUCTORS AND EQUIPMENT / COMMUNICATION LINES.

3. MAINTENANCE OF TRAFFIC: CONTRACTOR SHALL PROVIDE THE OWNER WITH A WRITTEN MAINTENANCE OF TRAFFIC (MOT) PLAN, IN ACCORDANCE WITH THE AMERICAN TRAFFIC SAFETY SERVICES ASSOCIATION, PRIOR TO COMMENCING CONSTRUCTION.

4. ACCESS: THE CONTRACTOR SHALL BE RESPONSIBLE FOR MAINTAINING SAFE VEHICULAR AND PEDESTRIAN ACCESS AT ALL TIMES.

5. WARRANTY: ALL WORK, MATERIALS, OR EQUIPMENT SHALL BE WARRANTIED FOR A MINIMUM OF ONE YEAR, FROM THE DATE OF FINAL ACCEPTANCE BY THE OWNER, AGAINST DEFECTIVE MATERIALS AND/OR WORKMANSHIP. ALL WORK FOUND TO BE DEFECTIVE WILL BE REPLACED BY THE CONTRACTOR AT NO EXPENSE TO THE OWNER.

6. SHOP DRAWINGS: THE CONTRACTOR SHALL PROVIDE A MINIMUM OFTHREE (3) COPIES (OR MORE, IF REQUIRED) OF SHOP DRAWINGS, PRODUCT DATA, MATERIAL SPECIFICATIONS AND OTHER INFORMATION REGARDING CONSTRUCTION MATERIALS AND STRUCTURES AS REQUESTED BY THE ARCHITECT / ENGINEER OF RECORD OR THE AHJ. SHOP DRAWINGS MUST BE NEWLY PREPARED INFORMATION, DRAWN TO ACCURATE SCALE. STANDARD INFORMATION PREPARED WITHOUT SPECIFIC REFERENCE TO THE PROJECT WILL BE RETURNED TO THE CONTRACTOR WITHOUT REVIEW. SHOP DRAWINGS SHALL BE SUBJECT TO THE FOLLOWING:
   A. BY SUBMITTAL OF ANY SHOP DRAWING OR CATALOG DATA, BEARING AN APPROVAL STAMP, THE CONTRACTOR REPRESENTS THAT IT HAS DETERMINED AND VERIFIED ALL FIELD MEASUREMENTS, FIELD CONSTRUCTION CRITERIA, MATERIALS, DIMENSIONS, CATALOG NUMBERS AND SIMILAR DATA, OR WILL DO SO, AND THAT IT HAS CHECKED AND COORDINATED EACH ITEM WITH OTHER APPLICABLE APPROVED SHOP DRAWINGS AND THE CONTRACT REQUIREMENTS.
   B. SHOP DRAWINGS AND CATALOG DATA SUBMITTED WITHOUT THE CONTRACTOR'S STAMP OF APPROVAL WILL BE RETURNED TO THE CONTRACTOR WITHOUT REVIEW. APPROVAL OF SHOP DRAWINGS, SAMPLES, OR CATALOG DATA BY THE ENGINEER OF RECORD OR THE CITY OF LAKE WORTH SHALL NOT AUTHORIZE ANY DEVIATION FROM THE REQUIREMENTS OF THE CONTRACT DOCUMENTS.
   C. ANY PROPOSED SUBSTITUTE OR EQUAL TO THE THAT SHOWN ON THE CONTRACT DOCUMENTS SHALL BE ACCOMPANIED BY CALCULATIONS SUBSTANTIATING EQUIVALENCY. SHOP DRAWINGS WITH SUBSTITUTE MATERIALS NOT ACCOMPANIED BY CALCULATIONS WILL BE RETURNED WITHOUT REVIEW.
   D. THE CONTRACTOR SHALL CONFIRM COMPATIBILITY OF PIPE SLOPES AND INVERTS DURING THE SHOP DRAWING AND MATERIALS ORDERING PHASE OF THE PROJECT AND ADVISE THE ENGINEER OF RECORD IN WRITING OF ANY DISCREPANCIES.
   E. INDIVIDUAL SHOP DRAWINGS FOR ALL PRECAST STRUCTURES ARE REQUIRED. CATALOG LITERATURE WILL NOT BE ACCEPTED FOR PRECAST STRUCTURES.

7. FIELD REVIEWS: THE CONTRACTOR SHALL PROVIDE NOTIFICATION, 48 HOURS (MIN.), PRIOR TO ANY REQUIRED FIELD REVIEWS OR INSPECTIONS AND SHALL SUPPLY ALL NECESSARY EQUIPMENT, LABOR, AND MATERIALS FOR INSPECTION AND / OR TEST. ALL WORK SHALL BE OPEN AND SUBJECT TO REVIEW AND / OR INSPECTION BY AUTHORIZED PERSONNEL OF THE MUNICIPAL AUTHORITYAND THE ENGINEER / ARCHITECT OF RECORD.

8. DENSITY TESTING: THE CONTRACTOR SHALL BE RESPONSIBLE FOR OBTAINING ALL NECESSARY TESTING TO ENSURE THAT THE PROPER COMPACTION HAS BEEN ACHIEVED FOR ALL SUBGRADE, BASE MATERIAL, PIPE BASE MATERIAL, BACKFILL, AND ALL OTHER AREAS WHERE COMPACTION REQUIREMENTS ARE SPECIFIED. ALL TEST RESULTS SHALL BE SIGNED AND SEALED BY A CALIFORNIA LICENSED PROFESSIONAL ENGINEER AND COPIES SHALL BE PROVIDED TO THE ENGINEER OF RECORD AND THE MUNICIPAL AUTHORITY.

9. PERMITS: THE CONTRACTOR SHALL NOT COMMENCE CONSTRUCTION PRIOR TO RECEIPT OF ALL APPLICABLE PERMITS AND APPROVALS INCLUDING AN APPROVED MAINTENANCE OF TRAFFIC PLAN. THE CONTRACTOR SHALL ABIDE BY ALL APPLICABLE REQUIREMENTS OF THE PERMITS AND AGENCY APPROVALS.

10. EROSION CONTROL: ALL EROSION CONTROL MEASURES SHALL BE INSTALLED IN ACCORDANCE WITH CALTRANS AND THE NATIONAL POLLUTANT DISCHARGE ELIMINATION SYSTEM (NPDES) GENERAL PERMIT (IF APPLICABLE), AND THE STORMWATER POLLUTION PREVENTION PLAN (SWPPP). FILTER FABRIC, HAY BALES, OR FILTRATION BAGS SHALL BE INSTALLED IN EACH INLET THROUGHOUT THE CONSTRUCTION PERIOD. A SOIL TRACKING PREVENTION DEVICE (STPD) SHALL CONSTRUCTED AT ALL UNSTABILIZED CONSTRUCTION ACCESS POINTS.

11. STORM DRAINAGE: ALL STORM DRAINAGE PIPE JOINTS SHALL BE WRAPPED IN FILTER FABRIC PER CALTRANS AND MUNICIPAL STANDARDS. ALL DRAINAGE STRUCTURES SHALL CONFORM TO THE REQUIREMENTS OF CALTRANS STANDARD SPECIFICATIONS FOR ROAD AND BRIDGE CONSTRUCTION, LATEST EDITION. ALL GRATES SHALL BE SECURED TO THE STRUCTURES WITH AN EYEBOLT AND CHAIN. ALL STORM DRAINAGE SHALL BE FREE OF SILT AND SEDIMENT AT THE TIME OF FINAL ACCEPTANCE BY THE MUNICIPALITY.

12. DEWATERING: THE CONTRACTOR SHALL BE RESPONSIBLE FOR OBTAINING AND COMPLYING WITH ANY DEWATERING PERMITS AND/OR APPROVALS NECESSARY FOR CONSTRUCTION. NO WATER FROM DEWATERING MEASURES SHALL BE DISCHARGED OFF-SITE. ALL DISCHARGE SHALL BE CONTAINED IN ON-SITE SEDIMENT BASINS.

18. SIDEWALKS: ALL SIDEWALKS SHALL BE CONSTRUCTED TO MEET THE REQUIREMENTS OF THE AMERICANS WITH DISABILITIES ACT (ADA) THE CALIFORNIA BUILDING CODE, CHAPTER 11B - ACCESSIBILITY CODE FOR BUILDING CONSTRUCTION (CBC). ALL CURB RAMPS SHALL BE CONSTRUCTED IN ACCORDANCE WITH CALTRANS STANDARD DRAWINGS, THE ADA AND THE REQUIREMENTS OF THE CALIFORNIA BUILDING CODE. ALL WALKWAYS CROSSING VEHICULAR AREAS SHALL HAVE A DETECTABLE WARNING SURFACE (TRUNCATED DOMES) IN ACCORDANCE WITH CITED STANDARDS. ALL SIDEWALKS SHALL BE MEDIUM BROOM FINISHED WITH AN EVEN, DUSTLESS SURFACE AND SHALL BE FREE OF CRACKS AT TIME OF FINAL ACCEPTANCE BY THE MUNICIPALITY.

19. PAVEMENT: WHERE FULL-DEPTH PAVEMENT REPLACEMENT IS SPECIFIED, EXISTING BASEROCK MAY NOT BE RE-USED, HOWEVER IT MAY BE UTILIZED AS SUBGRADE STABILIZATION MATERIAL. ALL SUBGRADE SHALL BE FREE OF MUCK, ROOTS, UNDERBRUSH, VEGETATIVE MATTER, GARBAGE, TRASH, OR ANY OTHER UNSUITABLE MATERIALS. BASEROCK AND ASPHALT SHALL BE PLACED IN MULTIPLE LIFTS AND SHALL BE PLACED IN ACCORDANCE WITH THE APPLICABLE CALTRANS STANDARD SPECIFICATIONS FOR ROAD AND BRIDGE CONSTRUCTION, LATEST EDITION. FINAL LIFT OF ASPHALT SHALL PROVIDE A UNIFORM FINISH AND SHALL BE PLACED TO CORRECT MINOR IMPERFECTIONS IN THE FIRST LIFT AND TO PROVIDE POSITIVE DRAINAGE FOR THE VEHICULAR WAYS, PARKING AREAS, AND PEDESTRIAN FACILITIES.

20. SIGNING AND PAVEMENT MARKING: ALL PAVEMENT MARKINGS IN VEHICULAR WAYS SHALL BE THERMOPLASTIC. THERMOPLASTIC SHALL NOT BE INSTALLED ON PAVEMENT UNTIL A MINIMUM OF FIVE (5) CALENDAR DAYS AFTER THE FINAL LIFT OF ASPHALT HAS BEEN COMPLETED. BLUE REFLECTIVE PAVEMENT MARKERS (RPM) SHALL BE INSTALLED TO INDICATE THE LOCATION OF ALL FIRE HYDRANTS.

# GENERAL DEMOLITION NOTES

1. DEMOLITION NOTES ARE GUIDELINES. FIELD VERIFY SPECIFIC QUANTITIES AND LOCATIONS OF ALL ITEMS TO BE REMOVED PRIOR TO COMMENCEMENT OF THE WORK.

2. DEMOLITION KEYNOTES APPLY TO ALL ITEMS SHOWN DASHED, WHETHER OR NOT A KEY NOTE APPEARS ADJACENT TO EACH ITEM SHOWN.

3. DEMOLITION CONTRACTOR SHALL COORDINATE HIS WORK WITH OTHER CONTRACTORS FOR THE PURPOSE DETERMINING SCOPE AREAS, EXTENT, ANY REROUTING OF UTILITIES AND IRRIGATION, AND AS NEEDED TO PREPARE THE WORK FOR NEW CONSTRUCTION. IN ADDITION TO NEW WORK DESCRIBED IN THESE LANS, CONTRACTOR IS RESPONSIBLE FOR RESTORING CONDITIONS WHERE DEMOLITION REMOVES MORE THAN THAT NECESSARY AT NO ADDITIONAL COST TO THE OWNER.

4. REFER TO OTHER DRAWINGS AS OCCURS FOR ADDITIONAL DEMOLITION WORK NOT SHOWN HERE. REFER ALSO TO PLAN DRAWINGS FOR ADDITIONAL INFORMATION RELATING TO THE EXTENT OF DEMOLITION AS MAY BE REQUIRED TO PREPARE THE WORK FOR NEW CONSTRUCTION. REFER TO AND COORDINATE ALL DEMOLITION WORK WITH SEQUENCING OF TRADES AND FOR ADDITIONAL AREAS AND EXTENT OF DEMOLITION AS NECESSARY FOR THE PREPARATION FOR NEW WORK, AND FOR EQUIPMENT AND SYSTEMS THAT ARE INTENDED TO BE REMOVED OR TO REMAIN, AND FOR RELATED DEMOLITION WORK NOT SHOWN ON THESE DEMOLITION PLANS.

5. CAREFULLY REMOVE ITEMS SCHEDULED TO BE RELOCATED OR RE-USED. CLEAN AND REPAIR ITEMS TO FUNCTIONAL CONDITION ADEQUATE FOR INTENDED REUSE. REINSTALL ITEMS IN LOCATIONS INDICATED. COMPLY WITH SIMILAR INSTALLATION REQUIREMENTS FOR NEW MATERIALS AND EQUIPMENT. PROVIDE CONNECTIONS, SUPPORTS, AND MISCELLANEOUS MATERIALS NECESSARY TO MAKE ITEM FUNCTIONAL FOR USE INDICATED. TEMPORARILY RE-ROUTE, REMOVE OR LIFT EXISTING CONDUIT, WIRES, AND FIXTURES, NOT NOTED TO BE REMOVED AS NECESSARY TO INSTALL NEW WORK. CONTRACTOR SHALL PROTECT SUCH CONDUIT, WIRES, AND FIXTURES. AFTER NEW WORK AND FINISHES ARE INSTALLED AND COMPLETED, ALL CONDUITS, WIRES, AND FIXTURES SHALL BE REINSTALLED AND CONTRACTOR SHALL VERIFY THAT ALL SYSTEMS ARE OPERATIONAL.

6. ALL EXISTING ABANDONED PIPING, CONDUIT, WIRING, AND DUCTS NOT SCHEDULED TO REMAIN OR BE REUSED SHALL BE REMOVED COMPLETELY.

7. AT ALL WALLS, OR PORTIONS OF WALLS SCHEDULED TO BE REMOVED, INCLUDE RE-ROUTING OF INFRASTRUCTURE TO REMAIN AND THE DEMOLITION OF EXISTING MECHANICAL, PLUMBING, AND ELECTRICAL UTILITIES INCLUDED IN THE WALL BACK TO THEIR SOURCE.

8. ALL MOVABLE EQUIPMENT, FURNISHINGS, ETC. IN THE WORK AREA TO BE REMOVED BY THE OWNER PRIOR TO THE START OF CONSTRUCTION.

9. ANY WORK WHICH MAY EFFECT THE EXISTING FACILITIES NOT INCLUDED IN THE SCOPE OF THIS PROJECT SHALL BE COORDINATED WITH AND AUTHORIZED BY THE OWNER'S CONSTRUCTION MANAGER / REPRESENTATIVE. NOTIFY THE OWNER'S CONSTRUCTION MANAGER A MINIMUM OF 48 HOURS IN ADVANCE OF PROCEEDING WITH SUCH WORK.

10. AFTER DEMOLITION WORK IS COMPLETE, CONTRACTOR SHALL COORDINATE MEETING WITH OWNER'S CONSTRUCTION MANAGER TO REVIEW THE CONDITION OF ALL MATERIAL AND EQUIPMENT STORED FOR REUSE ON THIS PROJECT OR TO BE TURNED OVER TO THE OWNER.

11. THE DEMOLITION DRAWINGS ARE TO ASSIST THE CONTRACTOR IN THE GENERAL DETERMINATION OF THOSE ITEMS TO BE REMOVED AND RELOCATED. CONTRACTOR SHALL REVIEW ALL DRAWINGS, SPECIFICATIONS AND DOCUMENTS THAT ARE INCLUDED IN THE BID PACKAGE TO DETERMINE THE FULL EXTENT OF THE SCOPE OF WORK. THE CONTRACTOR SHALL REFER TO CONDITIONS AND INFORMATION DESCRIBED IN OTHER AREAS OF THE CONTRACT DOCUMENTS AND CONTAINED IN RECORD DOCUMENTS OF ORIGINAL CONSTRUCTION FOR THE SUBJECT FACILITIES.

12. INFORMATION PER ALL PIPING, DUCTING AND CONDUIT SHOWN ON THESE PLANS AND IN RECORD DOCUMENTS HAS BEEN PROVIDED BY THE OWNER AND IF SHOWN IS SHOWN SCHEMATICALLY FOR REFERENCE PURPOSES ONLY. NOT ALL CONDITIONS ARE NECESSARILY SHOWN OR NOTED. THE ARCHITECT DOES NOT WARRANT THE EXISTENCE, ACCURACY OR EXTENT OF SUCH ITEMS IF ASND WHERE SHOWN. VERIFY ALL CONDITIONS. RECORD DOCUMENTS OF EXISTING FACILITIES ARE AVAILABLE FOR REVIEW BY APPOINTMENT ONLY AT THE OWNER'S CONSTRUCTION MANAGER'S OFFICES FOR REVIEW BY CONTRACTORS.

13. THE CONTRACT DOCUMENTS MAY NOT REFLECT ALL EXISTING CONDITIONS ACCURATELY. THEY ARE INTENDED TO DEFINE THE SCOPE OF WORK. NOT ALL UNIQUE CONDITIONS HAVE BEEN IDENTIFIED. EXISTING ITEMS ARE SHOWN AS ACCURATELY AS POSSIBLE WITH THE INFORMATION AVAILABLE. ANY DISCREPANCIES OR DISCOVERIES OF UNFORESEEN CONDITIONS, AND ANY EXISTING CONDITIONS OBSERVED THAT ARE NOT INDICATED IN THE CONSTRUCTION DOCUMENTS AND WHICH WILL AFFECT THE DEMOLITION OR NEW CONSTRUCTION, SHALL BE BROUGHT TO THE ATTENTION OF THE ARCHITECT PRIOR TO COMMENCING WORK IN AFFECTED AREAS. VERIFY ALL EXISTING CONDITIONS AND UTILITIES IN THE FIELD. NOTIFY ARCHITECT OF ANY DISCREPANCIES THAT MAY OCCUR. IT SHALL BE THE CONTRACTOR'S RESPONSIBILITY TO IDENTIFY AND INFORM THE ARCHITECT IN WRITING OF ANY CONDITIONS NOT SHOWN IN CONTRACT DOCUMENTS WHICH AFFECT THE WORK.

14. ALL AREAS TO BE DEMOLISHED AS DESCRIBED HEREIN SHALL BE PREPARED FOR ALTERATION WORK DESCRIBED ELSEWHERE IN THESE PLANS, SPECIFICATIONS AND CONSTRUCTION DOCUMENTS. CONTRACTOR TO REVIEW ALL DOCUMENTS FOR OTHER DEMOLITION WORK AND SHALL COORDINATE ALL WORK.

15. DEMOLITION CONTRACTOR SHALL REVIEW ALL PLANS AND SPECIFICATIONS AND COORDINATE WITH OTHER TRADES TO DETERMINE SPECIAL REQUIREMENTS WHICH DEFINE THE SCOPE, EXTENT, CONFIGURATION, LOCATION AND ALIGNMENT OF COMPLETED DEMOLITION CONDITIONS.

16. CONDUCT A PRE-DEMOLITION MEETING AT THE PROJECT SITE BEFORE COMMENCING WITH DEMOLITION WORK. INSPECT AND DISCUSS CONDITION OF CONSTRUCTION TO BE SELECTIVELY DEMOLISHED. REVIEW DEMOLITION METHODS AND PROCEDURES. REVIEW PROTECTION MEASURES FOR EXISTING CONSTRUCTION AND BUILDING ENTRIES, AND OTHER BUILDING FACILITIES DURING DEMOLITION OPERATIONS. CONDUCT WALK-THROUGH WITH OWNER TO ESTABLISH BASELINE OF ACCEPTABLE STANDARDS OF ITEMS SCHEDULED FOR REUSE.

17. DEMOLITION / SAWCUT WORK FOR THIS PROJECT IS GENERALLY INDICATED ON THE DEMOLITION PLAN DRAWINGS. CONTRACTOR TO VERIFY ALL SAWCUT WORK WITH OTHER TRADES AND DISCIPLINES AS MAY BE SHOWN ELSEWHERE. CONTRACTOR SHALL INCLUDE ALL SUCH WORK, WHETHER INDICATED OR NOT, IN HIS/HER BID AND AS REQUIRED FOR A COMPLETE INSTALLATION OF ALL ELEMENTS, MATERIALS, ASSEMBLIES AND SYSTEMS INDICATED ON THE DRAWINGS.

18. COORDINATE EXTENT AND LOCATION AND NECESSITY TO RELOCATE, RESET, ADJUST OR RE-ROUTE ITEMS SUCH AS STORMWATER RUNOFF FACILITIES, AREA DRAINS, DRAINAGE AND RAIN WATER PIPING, IRRIGATION PIPING AND ASSOCIATED SLEEVES, ELECTRICAL, AND OTHER ELEMENTS AND INFRASTRUCTURE TO BE REMOVED OR RELOCATED AS REQUIRED TO RECEIVE NEW WORK PER PLAN. VERIFY ALL EXISTING SUCH ITEMS PRIOR TO COMMENCING DEMOLITION.

19. THE CONTRACTOR, AND SUBCONTRACTORS, ARE RESPONSIBLE FOR VISITING THE SITE TO OBSERVE THE EXTENT AND NATURE OF THE EXISTING CONDITIONS PRIOR TO SUBMITTING BIDS FOR THE WORK. ANY EXISTING CONDITIONS OBSERVED WHICH WILL AFFECT THE WORK NOT OTHERWISE INDICATED IN THESE DOCUMENTS SHALL IMMEDIATELY BE BROUGHT TO THE ATTENTION OF THE ARCHITECT AND OWNER.

20. ALL ITEMS SCHEDULED TO BE REMOVED AND NOT RELOCATED, TURNED OVER TO THE OWNER, OR SALVAGED ARE TO BE REMOVED FROM THE SITE, RECYCLED OR DISPOSED OF IN A MANNER COMPLYING WITH APPLICABLE REGULATIONS.

21. PROVIDE TEMPORARY SHORING / BRACING AS NECESSARY TO PROTECT EXISTING BUILDING COMPONENTS PRIOR TO RELATED WORK.

22. ALL SAW CUTS OF EXISTING CONDITIONS TO REMAIN SHALL BE ALIGNED, SMOOTH AND EVEN TO CONFORM TO AND RECEIVE NEW WORK SHOWN ELSEWHERE IN THE CONSTRUCTION DOCUMENTS.

23. PORTIONS OF BUILDING AND SITE WILL BE OCCUPIED DURING DEMOLITION, CONDUCT DEMOLITION SO THAT OCCUPANT'S NORMAL BUSINESS OPERATIONS WILL NOT BE DISRUPTED. PROVIDE NOT LESS THAN 72 HOURS NOTICE TO BUILDING OWNER AND OCCUPANTS OF ACTIVITIES THAT WILL AFFECT OCCUPANTS OPERATIONS. MAINTAIN ACCESS TO EXISTING WALKWAYS, CORRIDORS, AND OTHER ADJACENT OCCUPIED OR USED FACILITIES. DO NOT CLOSE OR OBSTRUCT WALKWAYS, CORRIDORS, OR OTHER OCCUPIED OR USED FACILITIES WITHOUT WRITTEN PERMISSION FROM AUTHORITIES HAVING JURISDICTION. MAINTAIN FIRE PROTECTION AND BUILDING SECURITY SYSTEM IN SERVICE DURING DEMOLITION OPERATIONS.

24. INSTALL SPECIFIED PROTECTIVE WRAP WHERE NECESSARY TO PROTECT EXISTING CONDITIONS PRIOR TO COMMENCING DEMOLITION WORK. ERECT AND MAINTAIN TEMPORARY PROTECTIONS, INCLUDING BRACING, BARRICADES, SIGNS, AND OTHER MEASURES AS REQUIRED BY CODES AND REGULATIONS. ERECT AND MAINTAIN DUSTPROOF PARTITIONS AND TEMPORARY ENCLOSURES TO LIMIT DUST AND DIRT MIGRATION AND TO SEPARATE AREAS FROM FUMES AND NOISE. PROTECT WALLS, CEILINGS, FLOORS, AND OTHER EXISTING FINISH TO REMAIN. COVER AND PROTECT FURNITURE, FURNISHINGS, AND EQUIPMENT NOT TO BE REMOVED.

25. ALL EXISTING SURFACES, WALLS, DOORS, WINDOWS, FRAMES, HARDWARE, ETC., NOT SHOWN TO BE REMOVED OR ALTERED SHALL REMAIN. PROTECT ALL EXPOSED SURFACES / MATERIALS / EQUIPMENT INDICATED TO REMAIN FROM DAMAGE DUE TO CONSTRUCTION ACTIVITY. SURFACES / MATERIALS / EQUIPMENT DAMAGED BY CONSTRUCTION ACTIVITIES SHALL BE REPAIRED BY THE CONTRACTOR AT NO ADDITIONAL COST TO THE OWNER. INSTALL GENERAL PROTECTION MATERIALS AS NECESSARY PRIOR TO COMMENCING DEMOLITION WORK. AFTER DEMOLITION WORK IS COMPLETE, CONTRACTOR SHALL MEET WITH OWNERS REPRESENTATIVE TO REVIEW THE CONDITION OF ALL MATERIAL AND EQUIPMENT STORED FOR REUSE ON THIS PROJECT OR BY THE DISTRICT ON A SEPARATE PROJECT.

26. WHERE DEMOLITION EXPOSES CONCEALED AREAS WHERE DETERIORATION OR CHANGED CONDITIONS ARE ENCOUNTERED THE CONTRACTOR SHALL IMMEDIATELY NOTIFY THE ARCHITECT IN WRITING THE LOCATION AND EXTENT OF SUCH CONDITIONS.

27. REPAIR DAMAGE TO ADJACENT CONSTRUCTION CAUSED BY SELECTIVE DEMOLITION AND RESTORE SURFACES INTENDED TO REMAIN. UNLESS OTHERWISE NOTED, USE REPAIR MATERIALS IDENTICAL TO EXISTING MATERIAL. PATCH WITH DURABLE SEAMS THAT ARE INVISIBLE AS POSSIBLE, WHERE PATCHING OCCURS IN A PAINTED SURFACE, APPLY PRIMER AND INTERMEDIATE PAINT COATS OVER PATCH AND APPLY FINAL PAINT COAT OVER ENTIRE UNBROKEN SURFACE CONTAINING PATCH, PROVIDE ADDITIONAL COATS UNTIL PATCH BLENDS WITH ADJACENT SURFACES.

28. EXISTING FIRE SAFETY, ALARM AND SPRINKLER SYSTEMS SHALL REMAIN OPERATIONAL THROUGHOUT THE COURSE OF THE PROJECT AND SHALL BE TESTED FOR SUCCESSFUL OPERATION AT THE COMPLETION OF WORK. NOTIFY OWNER'S REPRESENTATIVE AND OBTAIN ADVANCE AUTHORIZATION OF ANY TEMPORARY SHUT-DOWN OF EXISTING FIRE SAFETY AND/OR SPRINKLER SYSTEMS.

29. DO NOT ALLOW DEMOLISHED MATERIALS TO ACCUMULATE ON-SITE. STORAGE OR SALE OF REMOVED ITEMS ON-SITE IS NOT PERMITTED. DO NOT SOIL ADJACENT SURFACES OR OTHER BUILDING AREAS. LEGALLY DISPOSE OF REMOVED MATERIALS.

# SELECTIVE DEMOLITION

1. COMPLY WITH CODE OF FEDERAL REGULATIONS (CFR):
   29 CFR PART 1910 OCCUPATIONAL SAFETY AND HEALTH STANDARDS
   29 CFR PART 1926 SAFETY AND HEALTH REGULATIONS FOR CONSTRUCTION

2. CONTRACTOR SHALL VERIFY AND CHECK ALL AREAS TO BE DEMOLISHED, CUT AND PATCHED AND SHALL COORDINATE THE WORK OF THE VARIOUS TRADES INVOLVED FOR THE ORDERLY PROGRESS AND PROPER PROVISION OF THE WORK.

3. DO NOT CUT ANY STRUCTURAL MEMBERS, FOOTINGS, FOUNDATIONS OR OTHER BUILDING ELEMENTS.

4. CONTRACTOR OR CONTRACTOR'S DESIGNEE SHALL BE COMPETENT AND CAPABLE OF IDENTIFYING EXISTING AND PREDICTABLE HAZARDS IN THE SURROUNDINGS OR WORKING CONDITIONS THAT ARE UNSANITARY, HAZARDOUS, OR DANGEROUS TO THE PUBLIC OR EMPLOYEES, AND WILL TAKE PROMPT CORRECTIVE MEASURES TO ENSURE AND MAINTAIN SAFE WORKING CONDITIONS AND PROVIDE APPROPRIATE NOTIFICATIONS AND WARNINGS OF ANY CONDITIONS THAT ARE SUSPECT, QUESTIONABLE OR WOULD RESULT IN UNDUE EXPOSURE TO HAZARD OR RISK.

5. SUBMITTALS

   A. PROVIDE A SEQUENCE SCHEDULE INDICATING PROPOSED SEQUENCE OF OPERATIONS FOR SELECTIVE DEMOLITION WORK TO OWNER'S REPRESENTATIVE FOR REVIEW PRIOR TO START OF WORK. INCLUDE COORDINATION FOR PEDESTRIAN AND VEHICULAR TRAFFIC, PARKING, UTILITY SHUTOFF, CAPPING, AND CONTINUATION OF UTILITY SERVICES AS REQUIRED, TOGETHER WITH DETAILS FOR DUST AND NOISE CONTROL PROTECTION.
   B. PROVIDE DETAILED SEQUENCE OF DEMOLITION AND REMOVAL WORK TO ENSURE UNINTERRUPTED PROGRESS OF OWNER'S ON-SITE OPERATIONS. COORDINATE WITH OWNER'S CONTINUING OCCUPATION OF PORTIONS OF EXISTING BUILDING AND WITH OWNER'S PARTIAL OCCUPANCY OF COMPLETED NEW ADDITION.
   C. PHOTOGRAPHS OF EXISTING CONDITIONS OF STRUCTURE SURFACES, EQUIPMENT, AND ADJACENT IMPROVEMENTS THAT MIGHT BE MISCONSTRUED AS DAMAGE RELATED TO REMOVAL OPERATIONS. FILE WITH OWNER'S REPRESENTATIVE PRIOR TO START OF WORK.

6. PROJECT CONDITIONS:

   A. OWNER AND OWNERS BUSINESS TENANTS WILL OCCUPY PORTIONS OF THE SITE AND BUILDINGS IMMEDIATELY ADJACENT TO AREAS OF SELECTIVE DEMOLITION. CONDUCT SELECTIVE DEMOLITION WORK IN MANNER THAT WILL MINIMIZE NEED FOR DISRUPTION OF OWNER'S AND OWNER'S TENANTS NORMAL OPERATIONS. PROVIDE MINIMUM OF 72 HOURS ADVANCE NOTICE TO OWNER AND OWNER'S TENANTS OF DEMOLITION ACTIVITIES THAT WILL AFFECT OWNER'S AND OWNER'S TENANTS NORMAL OPERATIONS. NEITHER THE OWNER NOR THE DESIGN PROFESSIONAL ASSUME RESPONSIBILITY FOR ACTUAL CONDITION OF ITEMS, ELEMENTS OR FACILITIES TO BE DEMOLISHED.

7. PREPARATION:
   A. CONDUCT DEMOLITION OPERATIONS AND REMOVE DEBRIS IN MANNER TO ENSURE MINIMUM INTERFERENCE WITH ROADS, STREETS, WALKS, AND OTHER ADJACENT OCCUPIED OR USED FACILITIES.
   B. CONDUCT DEMOLITION OPERATIONS TO PREVENT INJURY TO PEOPLE AND DAMAGE TO ADJACENT BUILDINGS AND FACILITIES DESIGNATED TO REMAIN.
   C. PROVIDE PROTECTIVE MEASURES AS REQUIRED TO PROVIDE FREE AND SAFE PASSAGE TO AND FROM OCCUPIED PORTIONS OF THE SITE, FACILITIES BUILDINGS FOR THE PUBLIC AND PERSONS WITH DISABILITIES.
   D. PROVIDE TEMPORARY BARRICADES AND OTHER FORMS OF PROTECTION AS REQUIRED FOR SAFETY AND SECURITY.
   E. PROVIDE BARRIERS AND APPROPRIATE SIGNS MEETING REQUIREMENTS OF 29 CFR 1910 FOR SIZE AND COLOR WHERE NECESSARY TO RESTRICT PEDESTRIANS FROM WANDERING INTO CONSTRUCTION AREAS.
   F. CONDUCT SELECTIVE DEMOLITION OPERATIONS AND DEBRIS REMOVAL TO ENSURE MINIMUM EXTENT AND DURATION OF INTERFERENCE AND WITH ROADS, STREETS, WALKS, AND OTHER ADJACENT OCCUPIED OR USED FACILITIES.

8. DEMOLITION:

   A. GENERAL: PERFORM DEMOLITION WORK IN ACCORDANCE WITH 29 CFR 1926, WITH PARTICULAR ATTENTION TO REQUIREMENTS SET FORTH IN SUBPART T, "DEMOLITION".
   B. PERFORM WORK IN SAFE AND SYSTEMATIC MANNER.
   C. USE SUCH METHODS AS REQUIRED TO COMPLETE WORK INDICATED ON CONTRACT DRAWINGS AND MINIMIZE DISTURBANCE TO THE PUBLIC, NEIGHBORS, AND OF OWNER'S AND OWNER'S TENANTS NORMAL OPERATIONS.
   D. DEMOLISH AND REMOVE EXISTING CONSTRUCTION ONLY TO EXTENT REQUIRED, AND AS INDICATED IN CONTRACT DOCUMENTS.
   E. PROPERLY UTILIZE PROTECTIVE EQUIPMENT AND METHODS AT ALL TIMES.
   F. USE WATER AS NECESSARY TO LAY DUST WHEN CHIPPING, CORING, OR SAWING CONCRETE, MASONRY OR SIMILAR MATERIALS. WATER MUST BE CONTROLLED INSIDE BUILDINGS BY DAMMING, MOPPING OR VACUUMING. PREVENT WATER FROM ENTERING UNDERFLOOR ELECTRICAL DUCTS.
   G. COMPLETELY BACKFILL BELOW-GRADE AREAS AND VOIDS RESULTING FROM UTILITY REMOVAL AND OTHER DEMOLITION WORK.
   H. REMOVE TOOLS, EQUIPMENT AND DEMOLISHED MATERIALS FROM SITE UPON COMPLETION OF DEMOLITION WORK.
   I. MAINTAIN EXISTING UTILITIES INDICATED TO REMAIN IN SERVICE AND PROTECT THEM AGAINST DAMAGE DURING DEMOLITION OPERATIONS.
   J. DO NOT INTERRUPT UTILITIES SERVING OCCUPIED OR USED FACILITIES, EXCEPT WHEN AUTHORIZED IN WRITING BY AUTHORITIES HAVING JURISDICTION. PROVIDE TEMPORARY SERVICES DURING INTERRUPTIONS TO EXISTING UTILITIES, AS ACCEPTABLE TO GOVERNING AUTHORITIES.
   K. MAINTAIN FIRE PROTECTION SERVICES AND EMERGENCY ACCESS TO SITE AND FACILITIES DURING SELECTIVE DEMOLITION OPERATIONS.
   L. USE WATER SPRINKLING, TEMPORARY ENCLOSURES, AND OTHER METHODS TO LIMIT DUST AND DIRT MIGRATION. COMPLY WITH GOVERNING REGULATIONS PERTAINING TO ENVIRONMENTAL PROTECTION. DO NOT USE WATER WHEN IT MAY CREATE HAZARDOUS OR OBJECTIONABLE CONDITIONS SUCH AS ICE, FLOODING, RUNOFF, EROSION, SILTATION, POLLUTION OR CONDITIONS THAT IMPEDE OR RENDER UNSATISFACTORY CONDITIONS FOR THE ORDERLY PROGRESS OF THE WORK OR ANY CONDITIONS THAT INTERFERE WITH THE NORMAL OPERATIONS OF THE OWNER OR OWNER'S TENANTS.

9. PREPARATION:

   A. PROVIDE NECESSARY SHORING, BRACING, OR SUPPORT TO PREVENT MOVEMENT, SETTLEMENT, OR COLLAPSE OF AREAS TO BE DEMOLISHED AND ADJACENT FACILITIES TO REMAIN.
   B. CEASE OPERATIONS AND NOTIFY OWNER'S REPRESENTATIVE IMMEDIATELY IF SAFETY OF STRUCTURE OR ADJOINING ELEMENTS TO REMAIN APPEAR TO BE ENDANGERED. TAKE PRECAUTIONS TO SUPPORT STRUCTURE UNTIL DETERMINATION IS MADE FOR CONTINUING OPERATIONS. CONTRACTOR IS RESPONSIBLE TO DETERMINE AND MAINTAIN PROPER AND ADEQUATE SHORING AND PROTECTIONS.
   C. LOCATE, IDENTIFY, STUB OFF, AND DISCONNECT UTILITY SERVICES THAT ARE NOT INDICATED TO REMAIN.
   D. PROVIDE BYPASS CONNECTIONS AS NECESSARY TO MAINTAIN CONTINUITY OF SERVICE TO OCCUPIED AREAS OF BUILDING. PROVIDE MINIMUM OF 72 HOURS ADVANCE NOTICE TO OWNER IF SHUTDOWN OF SERVICE IS NECESSARY DURING CHANGEOVER.
   E. PROVIDE BYPASS CONNECTIONS OR INTERIM IRRIGATION FACILITIES AS NECESSARY TO MAINTAIN CONTINUITY OF IRRIGATION TO PLANT MATERIALS TO REMAIN.

10. MATERIAL OWNERSHIP:

   A. EXCEPT FOR ITEMS OR MATERIALS INDICATED TO BE REUSED, SALVAGED, OR OTHERWISE INDICATED TO REMAIN THE OWNER'S PROPERTY, DEMOLISHED MATERIALS SHALL BE BECOME THE CONTRACTOR'S PROPERTY AND SHALL BE REMOVED FROM THE SITE AND DISPOSED OF LAWFULLY.

11. DISPOSAL OF DEMOLISHED MATERIALS:

   A. GENERAL: PROMPTLY DISPOSE OF DEBRIS, RUBBISH, AND OTHER MATERIALS RESULTING FROM BUILDING SITE DEMOLITION OPERATIONS. TRANSPORT AND LEGALLY DISPOSE OFF SITE.
   B. IF CONTRACTOR ENCOUNTERS MATERIAL DURING REMOVAL THAT IS SUSPECTED TO BE POTENTIALLY HAZARDOUS STOP WORK IMMEDIATELY, TAKE ALL NECESSARY PRECAUTIONS TO PROTECT PERSONNEL AND THE PUBLIC, IMMEDIATELY NOTIFY OWNER AND APPROPRIATE PUBLIC AGENCY. IF HAZARDOUS MATERIALS ARE ENCOUNTERED DURING DEMOLITION OPERATIONS, COMPLY WITH APPLICABLE REGULATIONS, LAWS, AND ORDINANCES CONCERNING REMOVAL, HANDLING, AND PROTECTION AGAINST EXPOSURE OR ENVIRONMENTAL POLLUTION.
   C. DISCARDING, BURNING OR BURYING OF REMOVED MATERIALS IS NOT PERMITTED ON THE PROJECT SITE.

11. REPAIRS:

   A. REPAIR DEMOLITION PERFORMED IN EXCESS OF THAT REQUIRED.
   B. PROMPTLY REPAIR DAMAGES CAUSED TO ADJACENT FACILITIES BY DEMOLITION WORK.
   C. REPAIRS SHALL BE MADE TO THE SATISFACTION OF THE OWNER.

# SITE DEMOLITION NOTES

1. DEMOLITION AND CONSTRUCTION WORK MAY OCCUR AND SHALL BE CAREFULLY PERFORMED OVER THE TOP OF AND AROUND UTILITIES, TELEPHONE AND POWER SERVICES. CONTRACTOR SHALL WORK BY HAND IN ALL AREAS WHERE THESE SERVICES MIGHT BE HARMED BY LARGER, LESS PRECISE EQUIPMENT.

2. THE CONTRACTOR SHALL LOCATE AND CLEARLY MARK (AND THEN PRESERVE THESE MARKERS) FOR THE DURATION OF CONSTRUCTION OF ALL UTILITIES SUCH AS WATER, SEWAGE, STORM DRAIN, GAS, ELECTRIC, TELEPHONE, DATA, STREET LIGHT, SIGNAL LIGHT AND POWER FACILITIES THAT ARE IN OR NEAR THE AREA OF CONSTRUCTION.

3. CONTRACTOR'S BID IS TO INCLUDE ALL VISIBLE SURFACE AND ALL SUBSURFACE FEATURES IDENTIFIED TO BE REMOVED OR ABANDONED IN THESE DOCUMENTS.

4. PRIOR TO SUBMITTING A BID THE CONTRACTOR SHALL BE RESPONSIBLE FOR A SITE INSPECTION, AND BY SUBMITTING A BID FULLY ACKNOWLEDGE, EXISTING CONDITIONS AFFECTING THE WORK AND THE EXTENT OF THE DEMOLITION WORK.

5. THE CONTRACTOR SHALL BE RESPONSIBLE FOR OBTAINING ANY AND ALL PERMITS NECESSARY FOR ENCROACHMENT, GRADING, DEMOLITION, AND DISPOSAL OF SAID MATERIALS AS REQUIRED BY PRIVATE, LOCAL AND STATE JURISDICTIONS. THE CONTRACTOR SHALL PAY ALL FEES ASSOCIATED WITH THE DEMOLITION WORK.

6. CONTRACTOR SHALL PAY DISPOSAL FEES.

7. BACKFILL ALL DEPRESSIONS AND TRENCHES FROM DEMOLITION OF FOUNDATIONS AND UTILITIES TO THE SATISFACTION OF THE AGENCY HAVING AUTHORITY.

8. WITHIN LIMITS OF WORK, REMOVE CURBS, GUTTERS, LANDSCAPING, SIGNAGE, TREES, SHRUBS, ASPHALT, UNDERGROUND PIPES, ETC. AS INDICATED ON THE DRAWINGS AND AS NECESSARY TO ACCEPT NEW WORK INDICATED.

9. REMOVAL OF LANDSCAPING SHALL INCLUDE ROOTS AND ORGANIC MATERIALS TO THE SATISFACTION OF THE GEOTECHNICAL ENGINEER.

10. PRIOR TO BEGINNING DEMOLITION WORK ACTIVITIES, CONTRACTOR SHALL INSTALL EROSION CONTROL MEASURES OUTLINED IN THE EROSION CONTROL PLAN AND DETAILS.

11. CONTRACTOR SHALL BE RESPONSIBLE FOR DISPOSING ALL DEMOLITION MATERIALS, OR STORING AT DESIGNATED LOCATIONS SELECTED ITEMS IDENTIFIED BY OWNER'S REPRESENTATIVE FOR SALVAGE.

12. CONTRACTOR SHALL IMPLEMENT, ON AN ONGOING BASIS, BEST MANAGEMENT PRACTICES FOR THE PROJECT AND SITE INMPROVEMENTS. SEE SHEET A0.9.

WHERE A DISCREPANCY OCCURS BETWEEN GENERAL CONDITIONS OF THE CONTRACT, PROJECT SPECIFICATIONS, DETAILS AND THESE NOTES, THE MOST STRINGENT SHALL APPLY.

WHERE A DISCREPANCY OCCURS BETWEEN THESE NOTES OR PROJECT SPECIFICATIONS AND ANY APPLICABLE INDUSTRY STANDARDS OR REFERENCED STANDARDS INCLUDING ALL APPLICABLE CODES AND REGULATIONS, THE MOST STRINGENT SHALL APPLY.


Craig D. Williams
Architecture
Interiors
Planning
Project
Management

295 Neva Street
Sebastopol, CA
95472
(707) 400-8325 (m)
(707) 823-2724 (o)
ArchWiseDesign@Gmail.com



Drawings, specifications and all ideas, designs, and arrangements indicated on these drawings and specifications are and shall remain the property of Craig Williams, architect and are intended to be used in connection with this specific project only. No part shall be copied or disclosed to others or otherwise be used in connection with any other work or project other than the specified work for which they have been prepared without the written consent of the architect. There shall be no changes or deviations from these drawings or the accompanying specifications without the written consent of the architect.

THESE DRAWINGS ARE INSTRUMENTS OF SERVICE AND ARE THE SOLE PROPERTY OF CRAIG D. WILLIAMS, ARCHITECT, COPYRIGHT © 2014-2016

Visual contact with these plans and specifications shall constitute conclusive evidence of acceptance of these restrictions.


CRAIG D. WILLIAMS
NOT FOR CONSTRUCTION UNLESS SIGNED BY THE ARCHITECT AND APPROVED BY JURISDICTIONS HAVING AUTHORITY

LICENSED ARCHITECT
CRAIG DOUGLAS WILLIAMS
No. C026642
REN. 10-31-17
STATE OF CALIFORNIA

08-21-2016

ACCESSIBILITY UPGRADES
IVES POOL
AND POOL HOUSE
7400 WILLOW STREET
SEBASTOPOL, CA

PROJECT NUMBER:
082515.00
DATE:
26 JULY, 2016
DRAWN BY:
CW
CHECKED BY:
CW
REVISIONS:

GENERAL NOTES
ACCESSIBILITY NOTES

**T0.3**


© THESE DRAWINGS ARE INSTRUMENTS OF SERVICE AND ARE THE SOLE PROPERTY OF CRAIG WILLIAMS ARCHITECT. ANY USE WITHOUT WRITTEN CONSENT IS PROHIBITED.

# GENERAL PAVING NOTES

STANDARDS:
A. AGREGATES FOR BASE COURSE: COMPLY WITH SECTION 26 OF CLATRANS STANDARD SPECIFICATIONS, CLASS 2, 3/4-INCH MAXIMUM SIZE GRADATION.
B. AGREGATES FOR ASPHALTIC CONCRETE: COMPLY WITH SECTION 39 OF CLATRANS STANDARD SPECIFICATIONS, TYPE B, SIZE GRADATIONS AS INDICATED OR REQUIRED FOR PAVING CLASS AND APPLICATION.
C. BINDER COURSE: COMPLY WITH SECTION 39 OF CLATRANS STANDARD SPECIFICATIONS, 4.5 - 6 PERCENT OF ASPHALT CEMENT BY WEIGHT, 3/4-INCH MAXIMUM AGGREGATE (OR SIZED PER APPLICATION CLASS).
D. TOPPING COURSE: COMPLY WITH SECTION 39 OF CLATRANS STANDARD SPECIFICATIONS, 5 - 7 PERCENT OF ASPHALT CEMENT BY WEIGHT, 1/2-INCH MAXIMUM AGGREGATE (OR SIZED PER APPLICATION CLASS).
E. LIQUID ASPHALT: COMPLY WITH SECTION 93 OF CLATRANS STANDARD SPECIFICATIONS, MC-70, ASTM D2027.
F. ASPHALT EMULSIONS: COMPLY WITH SECTION 94 OF CLATRANS STANDARD SPECIFICATIONS, SS-1h.

1. ALL MATERIALS, WORKMANSHIP, AND CONSTRUCTION SHALL CONFORM TO THE COUNTY OF SONOMA STANDARD PLANS AND SPECIFICATIONS FOR PUBLIC IMPROVEMENTS.
2. THE LOCATION OF EXISTING UNDERGROUND UTILITIES AS SHOWN ON THESE PLANS ARE BASED ON THE BEST INFORMATION AVAILABLE; HOWEVER, THE COUNTY OF SONOMA, PROPERTY OWNER AND THE ARCHITECT ASSUME NO RESPONSIBILITY FOR THE ACCURACY OF THE INFORMATION SHOWN, OR FOR THE INADVERTENT OMISSION OF ANY SUCH INFORMATION. THE CONTRACTOR SHALL COOPERATE WITH ALL UTILITY COMPANIES AND OTHER CONTRACTORS WORKING WITHIN THE LIMITS OF THIS PROJECT.
3. THE CONTRACTOR SHALL SECURE ALL ENCROACHMENT PERMITS FROM THE COUNTY OF SONOMA AND ANY OTHER APPLICABLE AGENCIES.
4. THE CONTRACTOR SHALL SECURE A TRENCH PERMIT FROM THE CALIFORNIA DIVISION OF INDUSTRIAL SAFETY PRIOR TO EXCAVATION OF ANY TRENCH OVER FIVE FEET IN DEPTH.
5. UNDERGROUND SERVICE ALERT (USA): CALL TOLL FREE 800-842-2444 AT LEAST 48 HOURS PRIOR TO ANY EXCAVATION.
6. EXCEPT FOR CONSTRUCTION-RELATED ACCESSIBILITY STANDARDS AS GOVERNED BY THE AMERICANS WITH DISABILITIES ACT (2010), THE AMERICANS WITH DISABILITIES ACT ACCESSIBILITY GUIDELINES (2004), THE CALIFORNIA CODE OF REGULATIONS, TITLE 24, CALIFORNIA BUILDING CODE, THE PAVING IMPROVEMENTS AT THE SITE OF THE PROPOSED WORK SHALL BE CONSTRUCTED IN ACCORDANCE WITH THE STANDARD SPECIFICATIONS OF THE STATE OF CALIFORNIA, DEPARTMENT OF TRANSPORTATION, DIVISION OF HIGHWAYS, LATEST ADOPTED EDITION, WHICH SPECIFICATIONS ARE HEREINAFTER REFERRED TO AS THE STANDARD SPECIFICATIONS, AND ADDITIONALLY IN ACCORDANCE WITH ALL APPLICABLE MODIFICATIONS AND REVISIONS OF THE COUNTY OF SONOMA STANDARD PLANS; THE MOST STRINGENT REQUIREMENT SHALL APPLY.
7. ENGINEERED FILLS AND PADS SHALL BE COMPACTED TO A MINIMUM OF 90% RELATIVE COMPACTION PER ASTM SPECIFICATION D1557. ALL DRIVEWAY AND PARKING LOT GRADES SHALL BE COMPACTED TO A MINIMUM OF 95% RELATIVE COMPACTION PER ASTM SPECIFICATION D1557 AT THE UPPER 1 FT OF FINISHED SUBGRADE. ALL ROADWAY AND PARKING LOT GRADES ON ENGINEERED FILL SHALL BE COMPACTED TO A MINIMUM OF 95% RELATIVE COMPACTION PER ASTM SPECIFICATION D1557 AT THE UPPER 3 FT OF FINISHED SUBGRADE. IT IS RECOMMENDED THAT FIELD DENSITY TESTS BE COMPLETED BY OWNER FOR OWNER'S BENEFIT SUFFICIENT IN BOTH HORIZONTAL AND VERTICAL PLACEMENT TO PROVIDE REPRESENTATIVE TESTING OF ALL PLACED FILL. TESTING IN AREAS OF A CRITICAL NATURE SHOULD BE IN ADDITION TO THE NORMAL REPRESENTATIVE SAMPLINGS. EACH TEST, IF PERFORMED, SHALL BE IDENTIFIED WITH THE METHOD OF DETERMINING THE IN-PLACE DENSITY, SAND CONE OR DRIVE RING.
8. PAVEMENTS - GENERAL:
   A. ASPHALT CONCRETE (AC) SHALL CONFORM TO THE PROVISIONS IN SECTION 39, "ASPHALT CONCRETE," OF THE CALTRANS STANDARD SPECIFICATIONS, LATEST ADOPTED EDITION, THE PLANS AND THESE SPECIFICATIONS.
   B. PORTLAND CEMENT CONCRETE (PCC) SHALL CONFORM TO THE PROVISIONS IN SECTION 40" PORTLAND CEMENT CONCRETE PAVEMENT", OF THE CALTRANS STANDARD SPECIFICATIONS, LATEST ADOPTED EDITION, THE PLANS AND THESE SPECIFICATIONS.
8. PAVEMENT, CURB, GUTTER SHALL BE CONSTRUCTED TO THE FORM AND DIMENSIONS WHERE INDICATED ON THE PLANS AND WITHIN THE GRADE TOLERANCES SHOWN AND INDICATED ON THE PLANS AND REFERENCED STANDARDS.
9. WHERE CONCRETE IS REMOVED CONTRACTOR SHALL HAVE FIVE (5) CALENDAR DAYS MAXIMUM TO REPLACE CONCRETE IMPROVEMENTS:
   A. ALL EXISTING CURBS, GUTTERS, SIDEWALKS AND DRIVEWAYS THAT ARE TO BE RECONSTRUCTED SHALL BE SATISFACTORILY REPLACED WITHIN FIVE DAYS AFTER THEIR REMOVAL, UNLESS A PRIOR WRITTEN EXCEPTION BY THE OWNER IS GRANTED.
   B. ALL IMPROVEMENTS SHALL BE CONSTRUCTED IN ACCORDANCE WITH CALTRANS STANDARD SPECIFICATIONS, LATEST ADOPTED EDITION, AND COUNTY OF SONOMA, STANDARD DETAILS AND SPECIFICATIONS, LATEST ADOPTED EDITION (COUNTY STANDARDS).
   C. OTHER PUBLIC IMPROVEMENTS NOT DESCRIBED IN THE COUNTY STANDARDS SHALL BE CONSTRUCTED IN ACCORDANCE WITH THE LATEST EDITION OF THE STATE OF CALIFORNIA STANDARD SPECIFICATIONS (CALTRANS) AND IN CONFORMANCE WITH THE UTILITY OWNER'S REQUIREMENTS AND APPLICABLE DEPARTMENT OF PUBLIC WORKS STANDARDS.

# ASPHALTIC CONCRETE PAVEMENTS

ASPHALT CONCRETE SHALL BE PLACED ACCORDING TO THE DETAILS AND LOCATION SHOWN ON THE PLANS. WORK UNDER THIS ITEM SHALL CONFORM TO THE PROVISIONS IN SECTION 39, "HOT MIX ASPHALT" OF THE 2009 AMENDMENTS TO THE STATE STANDARD SPECIFICATIONS AND THESE TECHNICAL SPECIFICATIONS.

FULL DEPTH AC PAVEMENT REPAIR

1. FULL DEPTH BASE REPAIR THIS WORK SHALL CONSIST OF THE REMOVAL OF EXISTING PAVEMENT MATERIALS AND AT LEAST 1 INCH OF UNDERLYING MATERIALS, TO A MINIMUM DEPTH OF 5 INCHES, AND REPLACEMENT WITH COMPACTED ASPHALT CONCRETE.
2. ASPHALT CONCRETE FOR AC PAVEMENT FULL DEPTH BASE REPAIR SHALL CONFORM TO THE PROVISIONS IN SECTION 39, "HOT MIX ASPHALT" OF THE STATE STANDARD SPECIFICATIONS AND SECTION 9 "ASPHALT CONCRETE" OF THESE TECHNICAL SPECIFICATIONS, UNLESS OTHERWISE DIRECTED BY THE OWNER.
3. THE BASE REPAIRS SHALL BE PERFORMED PRIOR TO CRACK SEALING OPERATIONS. THE CONTRACTOR SHALL REMOVE EXISTING ASPHALT CONCRETE PAVEMENT AND ANY UNDERLYING MATERIALS TO THE DEPTH SPECIFIED ON THE PLANS EITHER BY MILLING OR BY SAW-CUTTING WITH A POWER-DRIVEN SAW TO A DEPTH OF NOT LESS THAN 0.15-FOOT.
4. THE THICKNESS OF THE ASPHALT CONCRETE SHALL BE AS INDICATED ON THE PLANS. ASPHALT CONCRETE SHALL BE PLACED AND COMPACTED IN LIFTS. AREAS INACCESSIBLE TO ROLLERS SHALL BE COMPACTED BY USE OF A POWER COMPACTOR OF THE HIGH IMPACT, VIBRA-PLATE TYPE, CAPABLE OF ATTAINING THE SAME COMPACTION AS THE ROLLED AREAS. RELATIVE COMPACTION SHALL BE DETERMINED BY CALIFORNIA TEST 375.

REPAIR AND RESURFACING

1. PROVIDE SELECTIVE DEMOLITION, MILLING, CUTTING, PATCHING AND CONSTRUCTION USING CLASS B ASPHALT CONCRETE (AC) AND AC OVERLAY TO THE LIMITS AND EXTENT OF SHOWN ON THE DRAWINGS AS AS NECESSARY FOR A COMPLETE AND PROPER INSTALLATION ACCORDING TO REFERENCED AND INDUSTRY STANDARDS.
2. ASPHALT CONCRETE USED IN PARKING LOTS SHALL COMPLY WITH SECTION 92 OF CALTRANS SPECIFICATIONS, LATEST EDITION. MIX SHALL BE PG 70-10 (AR 8000).
3. REPLACE AND PATCH PAVEMENT AREAS DETAILED ON DRAWING TO FULL-DEPTH WITH HOT MIX, HOT LAID ASPHALTIC CONCRETE.
4. THE FINAL PAVING COURSE FOR A.C. SURFACE PARKING LOT SHALL BE ONE TENTH OF ONE FOOT (.10') IN THICKNESS. THE FINAL PAVING COURSE SHALL BE LAID WITH A SELF-PROPELLED MECHANICAL SPREADING AND FINISHING MACHINE EQUIPPED WITH TAMPER BARS AND SCREED. (BARBER GREEN OR APPROVED EQUAL).
5. REFERENCES
   CALTRANS SPECIFICATION FOR HOT MIX, HOT LAID ASPHALT FOR THE JOB SITE AREA.
   CL-19 THE ASPHALT INSTITUTE BULLETIN, "FULL-DEPTH ASPHALT PATCHING"
   ASTM D 946 STANDARD SPECIFICATION FOR PENETRATION GRADED ASPHALT CEMENT IN PAVEMENT CONSTRUCTION
   ASTM D 113: STANDARD TEST METHOD OF DUCTILITY OF BITUMINOUS MATERIALS.
   ASTM D 977: STANDARD SPECIFICATION FOR EMULSIFIED ASPHALT.
   ASTM D 2397 STANDARD SPECIFICATION FOR CATIONIC EMULSIFIED ASPHALT
   ASTM D 3381 STANDARD SPECIFICATION FOR VISCOSITY-GRADED ASPHALT CEMENT FOR USE IN PAVEMENT CONSTRUCTION
   ASTM D 3628 STANDARD PRACTICE FOR SELECTION AND USE OF EMULSIFIED ASPHALT
   ASPHALT INSTITUTE: MS-4, THE ASPHALT HANDBOOK (LATEST EDITION).
   ASTM D 5078; STANDARD SPECIFICATION FOR CRACK FILLER, HOT-APPLIED, FOR ASPHALT CONCRETE AND PORTLAND CEMENT CONCRETE PAVEMENTS.
7. THE CONTRACTOR WILL BE RESPONSIBLE FOR ESTABLISHING ALL NECESSARY SLOPES, GRADES AND ELEVATIONS FOR HIS CONSTRUCTION PURPOSES TO INSURE A UNIFORM SURFACE, PROPER DRAINAGE, AND REASONABLE ALIGNMENT WITH EXISTING STRUCTURES, UTILITIES HARDWARE AND LANDSCAPING; SUBJECT TO OWNER'S APPROVAL. CONTRACTOR SHALL BE RESPONSIBLE FOR PROTECTING ALL UTILITIES (GAS, WATER, TELEPHONE, SPRINKLER SYSTEMS, INTERCOM, SECURITY, FIRE ELECTRICITY, ETC.).
8. PROJECT/SITE CONDITIONS AND ENVIRONMENTAL REQUIREMENTS:
   A. APPLY HOT MIX, HOT LAID ASPHALTIC CONCRETE IN DRY WEATHER WHEN PAVEMENT AND ATMOSPHERIC TEMPERATURES ARE FIFTY (50) DEGREES F AND RISING AND ARE ANTICIPATED TO REMAIN ABOVE FIFTY (50) DEGREES F FOR A MINIMUM OF FOUR (4) HOURS AFTER COMPLETING APPLICATION.
   B. ALL MANHOLE COVERS, DRAIN INLETS, GRATES, MONUMENTS, UTILITY VAULTS / BOXES, ETC. ARE TO BE RAISED OR LOWERED TO BE LEVEL WITH NEW SURFACE HEIGHT OF ASPHALT.
   C. DRAINAGE MUST BE MAINTAINED WHILE PERFORMING ALL ASPHALT WORK.
9. MATERIALS

AGGREGATE BASE AND BASE COURSE MATERIALS:

A. AGGREGATE SUB-BASE MATERIALS SHALL CONFORM TO THE REQUIREMENTS FOR CLASS 2 AGGREGATE SUBBASE CONTAINED IN SECTION 25□1.02A OF THE STATE STANDARD SPECIFICATION.
B. AGGREGATE BASE MATERIALS SHALL CONFORM TO THE REQUIREMENTS FOR CLASS 2 AGGREGATE SUBCBASE CONTAINED IN SECTION 25□1.02B OF THE STATE STANDARD SPECIFICATION.

MINERAL AGGREGATE:

A. MINERAL AGGREGATE SHALL BE IN ACCORDANCE WITH CALTRANS STANDARD SPECIFICATIONS, LATEST ADOPTED EDITION, AND COUNTY OF SONOMA, STANDARD DETAILS AND SPECIFICATIONS, LATEST ADOPTED EDITION (COUNTY STANDARDS).
B. ROAD BASE TYPE GRAVEL OR CRUSHED STONE, GRADED AS FOLLOWS:
SIEVE PERCENT OF WEIGHT PASSING 1) 3/4 INCH (19.0 MM) 100 2) NO. 4 (4.750 MM) 45 - 60 3) NO. 10 (2.000 MM) 30 - 50 4) NO. 200 (0.075 MM) 5 - 10 (NON-PLASTIC)

SPREADING AND COMACTION STANDARDS:

AGGREGATE BASE SHALL BE SPREAD IN ACCORDANCE WITH THE PROVISIONS OF SECTION 26- 1.04, "SPREADING" AND SECTION 26-1.05, "COMPACTION," OF THE CLAIFORNIA DEPARTMENT OF TRANSPORTATION STANDARD SPECIFICATIONS.

SPREADING AND COMPACTING SHALL BE PERFORMED BY METHODS THAT WILL PRODUCE A UNIFORM BASE, FIRMLY COMPACTED AND FREE FROM POCKETS OF COARSE OR FINE MATERIAL.

NO SPREADING OPERATION SHALL BEGIN UNTIL THE PHYSICAL CHARACTERISTICS OF AGGREGATE BASE HAVE BEEN APPROVED BY THE OWNER.

AGGREGATE BASE, REGARDLESS OF ITS USE, SHALL BE COMPACTED TO 95% (NINETY-FIVE PERCENT) RELATIVE COMPACTION AS DETERMINED BY ASTM D 6938.

10. PAVEMENT MATERIALS:
   A. ASPHALT TO BE MIXED WITH AGGREGATE TO FORM ASPHALTIC CONCRETE SHALL BE STEAM REFINED PAVING ASPHALT, GRADE AR□4000, CONFORMING TO THE REQUIREMENTS OF SECTION 92- 1.02 AND -1.03 OF THE STATE STANDARD SPECIFICATION.
   B. AGGREGATE FOR ASPHALTIC CONCRETE SHALL BE TYPE A CONFORMING WITH THE REQUIREMENTS OF SECTION 39□-2.02 OF THE STATE STANDARD SPECIFICATION WITH THE FOLLOWING SPECIAL PROVISIONS:
   C. GRADING OF COMBINED AGGREGATES FOR NEW ASPHALTIC CONCRETE PAVEMENT, WALKWAYS AND OVERLAYS 2" OR MORE IN THICKNESS SHALL BE 3/4" MAXIMUM SIZE, MEDIUM GRADING.
   D. GRADING OF COMBINED AGGREGATES FOR NEW ASPHALTIC CONCRETE PAVEMENT, WALKWAYS AND OVERLAYS 2" OR LESS IN THICKNESS SHALL BE 1/2" MAXIMUM SIZE, MEDIUM GRADING.
   NOTE: AGGREGATE SIZE SHALL IN NO EVENT BE MORE THAN THAT ANTICIPATED FOR THE MINIMUM OVERLAY THICKNESS OF THE PROJECT. CONTRACTOR TO VERIFY.
   E. LIQUID ASPHALT FOR PRIME COAT SHALL BE GRADE SC□70 CONFORMING TO THE REQUIREMENTS OF SECTION 92□-1.01 AND -1.02 OF THE STATE STANDARD SPECIFICATION.
   F. ASPHALTIC EMULSION FOR TACK COAT (PAINT BINDER) SHALL BE EMULSIFIED ASPHALT, TYPE SS□1H, CONFORMING TO THE REQUIREMENTS OF SECTION 94□-1.01 THROUGH -1.05 OF THE STATE STANDARD SPECIFICATION.
   G. SUPPLIERS CERTIFICATION SHOWING CONFORMANCE TO THESE SPECIFICATIONS SHALL BE DELIVERED WITH EACH SHIPMENT OF MATERIALS TO THE JOB SITE.
11. ASPHALT CEMENT:
   A. ASTM D3381 / D3381M - 09A STANDARD SPECIFICATION FOR VISCOSITY-GRADED ASPHALT CEMENT FOR USE IN PAVEMENT CONSTRUCTION - AC10 IN MODERATE CLIMATIC CONDITIONS.
   B. ASTM D946 / D946M - 09A STANDARD SPECIFICATION FOR PENETRATION-GRADED ASPHALT CEMENT FOR USE IN PAVEMENT CONSTRUCTION.
12. AGGREGATES:
   PROVIDE AGGREGATES CONSISTING OF CRUSHED STONE, GRAVEL, SAND, OR OTHER SOUND DURABLE, MINERAL MATERIALS PROCESSED AND BLENDED AND NATURALLY COMBINED IN ACCORDANCE WITH CALTRANS STANDARD SPECIFICATIONS, LATEST ADOPTED EDITION, AND COUNTY OF SONOMA, STANDARD DETAILS AND SPECIFICATIONS, LATEST ADOPTED EDITION (COUNTY STANDARDS).
   A. FINE TO COARSE MINERAL AGGREGATES WITH WEAR LESS THAN 40 PERCENT AS DETERMINED BY ASTM C131 AND MINERAL FILLER SUITABLE FOR PAVEMENT MEETING FOLLOWING GRADATION REQUIREMENTS: SIEVE PERCENT OF WEIGHT PASSING A) 1/2 INCH 100 B) NO. 4 60 - 80 C) NO. 16 26 - 42 D) NO. 50 11 - 23 E) NO. 200 5 - 9 (NON-PLASTIC).
12. ASPHALTS:
   COMPLY WITH PROVISIONS OF ASPHALT INSTITUTE SPECIFICATIONS SS-2
   A. ASPHALT CEMENT: PENETRATION GRADE 50/60
   B. PRIME COAT: CUT BACK TYPE, GRADE MC-250
   C. TACK COAT: UNIFORMLY EMULSIFIED, GRADE SS1H ASTM D2397 - 05 STANDARD SPECIFICATION FOR CATIONIC EMULSIFIED ASPHALT ASTM D3628 - 08 STANDARD PRACTICE FOR SELECTION AND USE OF EMULSIFIED ASPHALTS
13. MIXES:
   THE ASPHALTIC CONCRETE SHALL BE A HOT PLANT MIXED AND SHALL BE FURNISHED FROM A COMMERCIAL ASPHALT HOT MIX PLANT. THE ASPHALTIC CONCRETE MATERIAL SHALL CONSIST OF A MIXTURE OF SAND, MINERAL AGGREGATE AND A.R. 8000 LIQUID ASPHALT, MIXED IN SUCH PROPORTION AS TO CONFORM TO STATE OF CALIFORNIA, DEPARTMENT OF PUBLIC WORKS, SECTION 39, FOR 1/2" MEDIUM MIX,
   A. USE DRY MATERIAL TO AVOID FOAMING. MIX UNIFORMLY IN CENTRAL PLANT.
   B. MIXTURE: 5 TO 7 PERCENT OF ASPHALT CEMENT BY WEIGHT IN TOTAL MIXTURE IN ACCORDANCE WITH CALTRANS STANDARD SPECIFICATIONS, LATEST ADOPTED EDITION, AND COUNTY OF SONOMA, STANDARD DETAILS AND SPECIFICATIONS, LATEST ADOPTED EDITION (COUNTY STANDARDS).
14. EXTENT OF PAVING:
   A. PAVING SHALL BE REQUIRED AT ALL AREAS SHOWN IN DOCUMENTS PLUS THE FOLLOWING:
   B. EXTENT OF PAVING SHALL COVER TRANSITIONS BETWEEN NEW AND OLD SUCH THAT WATER TRAPS ARE NOT CREATED ON EITHER. THIS MAY REQUIRE FURTHER EXTENT OF DEMOLITION, GRINDING AND OVERLAY THAN SPECIFICALLY SHOWN ON DRAWINGS.
   C. CONTRACTOR SHALL REVIEW PERIMETER AREAS TO DETERMINE EXTENT OF PAVING WITH ARCHITECT PRIOR TO COMMENCEMENT.
   D. AT REPAIRS AND PATCHES, EXTENT OF PATCHING SHALL BE DETERMINED BY THE EXTENT OF EXISTING DEMOLITION AND BY THE EXTENT OF DAMAGE FROM WEAR, EXCAVATION ACTIVITIES AND INSTALLATION ACTIVITIES. CONTRACTOR SHALL BE RESPONSIBLE TO REPAIR PAVING OVER ALL AREAS OF DISRUPTION AND EXCESS WEAR RESULTING FROM CONSTRUCTION ACTIVITIES, REGARDLESS OF EXTENT OF PAVING SHOWN ON DRAWINGS.
   E. REPAIR PAVING SHALL COVER ANY CRACKING, DEPRESSION, SURFACE DAMAGE ASSOCIATED WITH INSTALLATION OF NEW CURBS, TRENCHING, APPURTENANCES, AND REPOSITIONING OF EXISTING GRADE BOXES, UTILITY COVERS, GRATINGS, STORM WATER INLETS, ETC. PROVIDE EXTENSIONS AND FLANGES AS NECESSARY. F. REPAIR PAVING WHERE HEADER GRINDING, MILLING, AND KEYING IS REQUIRED FOR A DURABLE AND PROPER INSTALLATION AND FOR SMOOTH, CONFORMING TRANSITIONS FREE OF DIVOTS, SAGS, CRACKS, ABRUPT CHANGES IN ELEVATION, WITH SLOPES NOT IN EXCESS OF THAT PERMISSIBLE UNDER ACCESSIBILITY STANDARDS.
   F. AT A MINIMUM, REPAIR PAVING SHALL CONSIST OF 6" BASE OVER 95% COMPACTED SUB-BASE WITH 2" MINIMUM AC OVERLAY.
   G. FULL DEPTH AC REPAIRS IN TRAFFIC AREAS SHALL BE MIN 4" AC OVER MIN 6" BASE OVER 95% COMPACTED SUB-BASE.
15. EXAMINATION AND PREPARATION:
   A. VERIFY GRADIENTS AND ELEVATIONS OF BASE.
   B. VERIFY COMPACTED SUBGRADE IS DRY AND READY TO SUPPORT PAVING AND IMPOSED LOADS.
   C. EXAMINE THAT AREA AND CORRECT CONDITIONS DETRIMENTAL TO TIMELY AND PROPER COMPLETION OF THE WORK. DO NOT PROCEED UNTIL SATISFACTORY CONDITIONS ARE CORRECTED.
   D. INSPECT ALL PAVED AREAS, INCLUDING THOSE THAT HAVE NOT NECESSARILY BEEN DELINEATED OR DETAILED ON PLANS, FOR PATCHING AND NOTIFY OWNER IN WRITING IF ADDITIONAL PATCHING IS NEEDED PRIOR TO PROCEEDING WITH ANY AFFECTED WORK.
   E. IF AFTER EXCAVATING FOR PATCHING, THE SUBBASE IS FOUND TO BE UNSUITABLE, NOTIFY OWNER IN WRITING PRIOR TO PROCEEDING WITH ANY AFFECTED WORK.
   F. DAMAGED OR UNACCEPTABLE AC PAVEMENT AREA TO BE REPLACED WILL BE SPECIFICALLY IDENTIFIED BY THE OWNER IN THE PRESENCE OF THE CONTRACTOR.
16. EXECUTION:
   A. THE CONTRACTOR SHALL GRIND TO A DEPTH NECESSARY TO RECEIVE AC OVERLAY, MAINTAIN PROPER SLOPES FOR DRAINAGE AND ACCESSIBILITY REQUIREMENTS, AND AS NECESSARY TO CONFORM FLUSH TO ADJACENT PAVEMENTS TO REMAIN.
   B. THE CONTRACTOR SHALL EXCAVATE AND REMOVE COMPLETELY DETERIORATED AC PAVEMENT, BASE MATERIAL AND SUB-BASE MATERIAL AS NECESSARY TO ACCOMMODATE THE REQUIRED REPLACEMENT CONSTRUCTION. THE AREAS WHERE EXCAVATION OCCURS SHALL BE RE-GRADED. C. IF THE BASE OR SUB-BASE MATERIAL DAMAGE OR FAILURE IS MORE EXTENSIVE (DEEPER) THAN THE REMOVAL REQUIRED FOR THE REPLACEMENT CONSTRUCTION, THEN EXCAVATION SHALL BE ACCOMPLISHED TO AN EXTENT NECESSARY FOR REMOVAL OF ALL UNDESIRABLE BASE OR SUB-BASE MATERIAL AS DETERMINED BY THE OWNER.
   D. THE ACCEPTABLE BASE OR SUB-BASE MATERIAL SHALL THEN BE CLEANED AND COMPACTED.
   E. SUFFICIENT NEW AND CLEAN BASE MATERIAL SHALL BE APPLIED AND COMPACTED TO PREPARE ADEQUATELY FOR INSTALLATION OF THE REQUIRED COMPACTED BASE MATERIAL AND ASPHALT SURFACE AS APPROPRIATE.
   F. AFTER PREPARATION, COMPACT TO A SMOOTH HARD SURFACE. APPLY SPECIFIED SUB-BASE AND BASE MATERIAL TO SPECIFIED MINIMUM THICKNESS. ALL AREAS WHICH SPECIFY ASPHALT REPLACEMENT IS TO BE 2" ASPHALT OVERLAY, OR 3" ASPHALT OVER 4" COMPACTED AGGREGATE BASE OR 4" ASPHALT OVER 6" COMPACTED AGGREGATE BASE WHERE INDICATED AND COMPACTED TO 95%.
17. PREPARATION REPAIR OF AREAS - PLACEMENT OF ASPHALTIC CONCRETE PAVING:
   A. REMOVE ALL LOOSE MATERIALS FROM THE COMPACTED BASE.
   B. CUT EDGES OF PAVEMENT IN RECTANGULAR SHAPE AND FOR ONE FOOT MINIMUM BEYOND DAMAGED MATERIAL. MAKE VERTICAL, SQUARE OR RECTANGULAR CUTS USING PAVEMENT SAW OR COLD PLANER. MAKE FACES STRAIGHT AND VERTICAL, WITH ONE PAIR OF FACES, WHERE PRACTICAL, PARALLEL TO THE DIRECTION OF TRAFFIC.
   C. REMOVE SURFACE, BASE COURSE AND SUBGRADE TO REACH FIRM SUPPORT. EXTEND AT LEAST ONE (1) FOOT HORIZONTALLY INTO PAVEMENT.
   D. TRIM AND COMPACT SUBGRADE. COMPACT SUBGRADE TO AT LEAST ONE HUNDRED (100) PERCENT OF STANDARD PROCTER DENSITY OR NINETY-FIVE (95) PERCENT OF MODIFIED PROCTER DENSITY.
   E. TACK COAT VERTICAL SURFACES WITH ASTM D 2397 OR D 3628 ASPHALT EMULSION TYPES SS-1, SS-1H, CSS-1 OR CSS-1H DILUTED WITH EQUAL PARTS OF WATER.
18. HEADER GRINDING:
   A. HEADER GRINDING TO BE PROVIDED 1-1/2" TO 2" DOWN AND 5' OUT WHERE CONCRETE MEETS ASPHALT OR AS INDICATED ON THE PLANS.
   B. HEADER GRIND AS REQUIRED TO ACCEPT AC OVERLAYS AND RESULT IN FLUSH CONFORMING CONDITIONS WHERE AC OVERLAY ABUTS EXISTING CONCRETE TO REMAIN SUCH AS AT REFUSE ENCLOSURES, DRIVEWAY APRONS, CONCRETE GUTTERS, ETC. VERIFY IN FIELD.
19. AGGREGATE BASE:
   A. REMOVE AND REPLACE DAMAGED AGGREGATE BASE AND SUB-GRADE. AGGREGATE BASE IS TO BE AT LEAST 6 INCHES (150 MM) THICK WHEN COMPACTED.
   B. COMPACT TO 95 PERCENT MINIMUM DENSITY AS DETERMINED BY AASHTO T-180 METHOD "D".
   C. FINISHED AGGREGATE BASE COURSE SHALL BE TRUE TO LINE AND GRADE WITHIN PLUS OR MINUS 1/4 INCH IN 10 FEET (6 MM IN 3 000 MM).
   D. APPLY EMULSION TO AGGREGATE BASE AND A TACK COAT TO VERTICAL EDGES OF EXISTING ASPHALT AND CURBS.
20. ASPHALT PAVING:
   A. ASPHALTIC CONCRETE SURFACING MATERIAL SHALL BE PLACED UPON THE APPROVED FINISHED SUB-GRADE SO THAT THE THICKNESS OF THE FINISHED ASPHALTIC CONCRETE SURFACING AFTER ROLLING AND COMPACTING SHALL BE AS NOTED ON THE PLANS.
   B. OVERLAY IN AREAS DESIGNATED ON PLANS AS REQUIRING OVERLAY.
   C. CONTRACTOR IS TO PROVIDE LEVELING ASPHALT COURSES ON ALL AREAS, WHICH REQUIRE SAID COURSE DUE TO IMPRESSIONS, NON-COMPLYING SLOPES, DIVOTS, ETC.
   E. CRACKS BETWEEN 1/8" AND ½" MUST BE FILED WITH A SUITABLE FILLER.
21. CRACK SEALING:
   A. CRACK SEALING SHALL BE PERFORMED PRIOR TO NEW ASPHALT CONCRETE PAVING AND AFTER ALL BASE REPAIRS ARE COMPLETED AND ACCORDING TO MFR INSTALLATION INSTRUCTIONS.
   B. CRACK SEALING WORK SHALL INCLUDE APPLYING HERBICIDE PRIOR TO CRACK SEALING, ROUTING, CLEANING, AND SEALING PAVEMENT.
   C. CRACKS 1/4-INCH AND GREATER IN WIDTH, THE EXISTING SURFACES SHALL BE PROPERLY CLEANED (WITH A SELF-LOADING VACUUM TYPE MOTOR SWEEPER) OF ALL DUST AND DEBRIS PRIOR TO CRACK SEALING.
   D. THE CONTRACTOR SHALL SUBMIT CERTIFICATES FROM SUPPLIERS STATING COMPLIANCE OF MATERIALS WITH THE REQUIREMENTS OF THIS SECTION.
   E. CRACK FILLER THE CRACK FILLER SHALL BE A MIXTURE OF PAVING ASPHALT AND GROUND RUBBER OR GROUND RUBBER AND POLYMER WHICH CONFORMS TO THE FOLLOWING REQUIREMENTS:
      I) THE GRADATION OF THE GROUND MATERIAL SHALL BE SUCH THAT 100% WILL PASS THE #8 SIEVE.
      II) THE MODIFIED ASPHALT MATERIAL SHALL BE FURNISHED AND PREMIXED IN CONTAINERS WITH AN INSIDE LINER OF POLYETHYLENE.
      III) PACKAGED MATERIAL SHALL NOT EXCEED 60 LBS. IN WEIGHT, STORAGE AND HEATING INSTRUCTIONS AND CAUTIONS SHALL BE SUPPLIED BY THE VENDOR WITH EACH SHIPMENT. THE MATERIALS SHALL BE CAPABLE OF BEING MELTED AND APPLIED TO CRACKS AND JOINTS AT TEMPERATURES BELOW 400°F. WHEN HEATED, IT SHALL READILY PENETRATE CRACKS 1/4-INCH WIDE OR LARGER.
      IV) MEET REQUIREMENTS UNDER ASTM D-36 & ASTM D-3407
   F. CRACK SEALING WORK SHALL BE COMPLETED AS SPECIFIED HEREIN PRIOR TO APPLICATION OF FINISH SURFACE TREATMENTS, WHICH TREATMENTS MAY INCLUDE, BUT NOT BE LIMITED TO, HOT MIX ASPHALT CONCRETE OVERLAY.
   G. CRACKS WIDER THAN 1/4-INCH SHALL BE ROUTED TO CREATE A UNIFORM WIDTH, AND BLOWN CLEAN OF LOOSE MATERIALS WITH A HIGH-PRESSURE AIR NOZZLE, (90 PSI OR GREATER) TO THE SATISFACTION OF THE OWNER. LOOSE MATERIALS INCLUDE VEGETATION, DUST, DIRT, MOISTURE, OLD SEALANT, AND FOREIGN MATERIAL. CRACKS SHALL BE SEALED FROM THE BOTTOM UP.
   H. SEALANT MATERIAL SHALL BE APPLIED SO IT IS FLUSH WITH THE PAVEMENT SURFACE. SEALANT MATERIAL MUST NOT BE HIGHER THAN THE ADJACENT SURFACE.
   I. TRAFFIC SHALL NOT BE ALLOWED ON THE MATERIAL UNTIL IT HAS SUFFICIENTLY CURED OR UNTIL IT HAS BEEN SANDED TO PREVENT TRACKING AND DAMAGE TO VEHICLES.
   J. PAVEMENT SHALL NOT BE PLACED FOR AT LEAST 24 HOURS AFTER CRACK SEALING.
23. PRIME, TACK COATS, AND SURFACE PREPARATION:
   APPLY THE SPECIFIED PRIME COAT AND TACK COAT WHERE REQUIRED AND ALLOW TO DRY IN ACCORDANCE WITH THE MANUFACTURER'S RECOMMENDATIONS.
   A. IMMEDIATELY PRIOR TO APPLYING PRIME COAT OR TACK COAT THE SURFACE TO BE PAVED SHALL BE SATISFACTORILY CLEANED OF ALL LOOSE MATERIAL BY MEANS OF POWERED BROOMS SUPPLEMENTED BY HAND BROOMS AS REQUIRED. LIQUID ASPHALT PRIME COAT SHALL THEN BE APPLIED TO THE AGGREGATE BASE COURSE IN CONFORMANCE WITH SECTION 39□4.02 OF THE STATE STANDARD SPECIFICATIONS. PRIME COAT SHALL BE APPLIED AT THE RATE OF 0.25 GALLONS PER SQUARE YARD UNLESS OTHERWISE DIRECTED. AFTER THE LIQUID ASPHALT HAS PENETRATED THE BASE COURSE, ANY EXCESS STANDING ON THE SURFACE SHALL BE ABSORBED TO THE SATISFACTION OF THE ARCHITECT'S FIELD REPRESENTATIVE WITH A SUITABLE COATING OF CLEAN SAND.
   B. TACK COAT SHALL BE APPLIED TO ALL VERTICAL SURFACES OF EXISTING PAVEMENT, CURBS, GUTTERS, CATCH BASINS, MANHOLE FRAMES AND CONSTRUCTION JOINTS IN THE SURFACING; TO THE SURFACE OF ALL EXISTING PAVEMENTS TO BE RESURFACED; AND OTHER SURFACES AS DESIGNATED. ASPHALTIC PAINT BINDER SHALL BE PROVIDED IN SUFFICIENT QUANTITY TO PRODUCE A THIN, UNIFORM BLACK, GLOSSY COAT OF ASPHALT. POOLS IN UNEVENLY DISTRIBUTED AREAS SHALL BE REDISTRIBUTED BY MEANS OF HAND BROOMS. TACK COAT SHALL BE APPLIED IN CONFORMANCE WITH THE REQUIREMENTS OF SECTION 39□4.02 OF THE STATE STANDARD SPECIFICATION.
   C. PRIOR TO PLACING ASPHALT OVER EXISTING PAVEMENT, SWEEP THE PAVEMENT OF LOOSE DIRT TO THE SATISFACTION OF THE OWNER'S FIELD REPRESENTATIVE.
23. RECEIPT OF ASPHALTIC CONCRETE MATERIALS:
   A. DO NOT ACCEPT MATERIAL UNLESS IT IS COVERED WITH A TARPAULIN UNTIL UNLOADED AND UNLESS THE MATERIAL HAS A TEMPERATURE OF NOT LESS THAN 280 DEGREES F.
   B. DO NOT COMMENCE PLACEMENT OF ASPHALTIC CONCRETE MATERIALS WHEN THE ATMOSPHERIC TEMPERATURE IS BELOW 50 DEGREES F., NOR DURING FOG, RAIN OR OTHER UNSUITABLE CONDITIONS.
24. PLACING ASPHALT PAVEMENT:
   A. BACKFILL WITH HOT MIX, HOT LAID ASPHALTIC CONCRETE.
   B. PREVENT SEGREGATION OF MIXTURE.
   C. ASPHALT CONCRETE SHALL BE PROPORTIONED, MIXED, SPREAD AND COMPACTED IN CONFORMANCE WITH APPLICABLE REQUIREMENTS OF SECTION 39.3 AND 39.5 OF THE STATE STANDARD SPECIFICATION AND THE FOLLOWING:
      I. ALL LONGITUDINAL JOINTS SHALL BE "HOT" JOINTS
      II. COLD JOINTS ARE ONLY ALLOWED TRANSVERSELY AT THE DISCONTINUANCE OF THE DAY'S RUN.
   D. IDENTIFY AND FIRST APPLY LEVELING COURSES IN LOW SPOTS AS OCCURS.
   ASPHALT CONCRETE FOR ROADWAYS, DRIVEWAYS AND PARKING AREAS SHALL BE PLACED IN LAYERS WHEN THE TOTAL DEPTH SPECIFIED ON THE PLANS AND DETAILS EXCEEDS 2". IN SUCH CASES, THE WEARING SURFACE COURSE SHALL NOT BE LESS THAN 1-1/2" IN COMPACTED THICKNESS NOR MORE THAN 2". THE NEXT LOWER LAYER SHALL NOT EXCEED 2-1/2" IN THICKNESS.
   E. WEARING SURFACE COURSE SHALL BE PLACED BY MEANS OF AN APPROVED SELF-PROPELLED ASPHALT PAVING MACHINE. CONTRACTOR MAY PLACE LOWER COURSES AND COMPACT ALL COURSES WITH EQUIPMENT CONFORMING TO THE APPLICABLE REQUIREMENTS OF SECTION 39.5 OF THE STATE STANDARD SPECIFICATION.
   F. WHERE ASPHALT PAVING IS TO BE LAID AGAINST CONCRETE GUTTER, THE FIRST PASS SHALL START AT THE GUTTER AND SUCCESSIVE PASSES SHALL WORK TOWARD THE CENTER OF THE STREET, DRIVEWAY OR PARKING AREA.
   G. THE FINISH SURFACE OF THE WEARING COURSE SHALL BE 1/4" ABOVE THE SURFACE OF THE GUTTER.
   H. TRUCKS, LOADED OR EMPTY, SHALL NOT BE ALLOWED ON THE NEW SURFACE UNTIL IT HAS REACHED AMBIENT TEMPERATURE.
   I. WHEN PLACING ASPHALT OVER EXISTING PAVEMENT, REPAIR LARGE CRACKS, SPALLS AND CHUCKHOLES, AND CLEAN THE PAVEMENT SURFACE TO THE SATISFACTION OF THE OWNER'S FIELD REPRESENTATIVE.
   J. COMPACT PAVEMENT BY ROLLING TO ACHIEVE EVEN AND SMOOTH FINISH, WITHOUT ROLLER MARKS. HAND COMPACT IN AREAS INACCESSIBLE TO ROLLING EQUIPMENT.
   K. PLACE FULL DEPTH AT TEMPERATURES BETWEEN 250 AND 325 DEG F (121 AND 163 DEG C).
   L. BITUMINOUS JOINTS SHALL BE VERTICAL AND PROPERLY TACK COATED.
   M. SPREAD MATERIAL IN A MANNER THAT REQUIRES THE LEAST HANDLING. WHEN THICKNESS OF FINISHED PAVING WILL BE 3" OR LESS, SPREAD IN ONE LAYER.
25. COMPACTION / ROLLING:
   A. AFTER THE MATERIAL HAS BEEN SPREAD TO THE PROPER DEPTH, ROLL UNTIL THE SURFACE IS HARD, SMOOTH, UNYIELDING AND TRUE TO GRADE.
   B. ROLL IN AT LEAST TWO DIRECTIONS UNTIL NO ROLLER MARKS ARE VISIBLE.
   C. ROLLING SHALL BE BY MEANS OF AN APPROVED 8-TON POWER ROLLER.
   D. COMPACT ASPHALTIC CONCRETE PAVING TO 96 PERCENT MINIMUM OF DESIGN DENSITY.
   E. ROLL WITH POWERED EQUIPMENT CAPABLE OF OBTAINING SPECIFIED DENSITY. VIBRATORY PLATE COMPACTOR MAY BE USED FOR AREAS TOO SMALL FOR LARGE POWER EQUIPMENT.
   F. BEGIN BREAKDOWN ROLLING IMMEDIATELY AFTER ASPHALT IS PLACED WHEN ASPHALT TEMPERATURE IS AT MAXIMUM. COMPLETE BREAKDOWN ROLLING BEFORE MIX TEMPERATURE DROPS BELOW 240 DEG F (116 DEG C). COMPLETE HANDWORK COMPACTION CONCURRENTLY WITH BREAKDOWN ROLLING.
   G. COMPLETE INTERMEDIATE ROLLING AS SOON AS POSSIBLE AFTER BREAKDOWN ROLLING AND BEFORE MIX TEMPERATURE DROPS BELOW 185 DEG F (85 DEG C). DO NOT ROLL PAVING FOR COMPACTION PURPOSES AFTER ASPHALT TEMPERATURE FALLS BELOW 185 DEG F (85 DEG C).
   H. EXECUTE COMPACTION SO VISIBILITY OF JOINTS IS MINIMIZED. COMPLETE FINISH ROLLING TO IMPROVE ASPHALT SURFACE AS SOON AS POSSIBLE AFTER INTERMEDIATE ROLLING AND WHILE ASPHALT PAVING IS STILL WARM. DO NOT USE VIBRATION FOR FINISH ROLLING.
   I. SURFACE SHALL BE UNIFORM WITH NO 'BIRDBATHS.' LEAVE FINISHED SURFACES CLEAN AND SMOOTH.
   J. FINISHED PAVING SMOOTHNESS TOLERANCE:
      I. FREE FROM BIRDBATHS.
      II. THE FINISHED SURFACE SHALL SHOW NO GREATER VARIATION THAN 1/8 INCH WHEN CHECKED WITH A 10-FOOT STRAIGHT EDGE, EXCEPT WHERE BREAKS IN GRADE ARE REQUIRED.
26. ACCESSORIES
   A. EXISTING MANHOLES, VALVE AND MONUMENT COVERS, OR OTHER SUCH STRUCTURES IN THE LINE OF THE WORK SHALL BE ADJUSTED TO CONFORM WITH THE NEW GRADE AFTER COMPLETION OF PAVING OPERATIONS.
   B. CONCRETE COLLARS SHALL BE CIRCULAR AND SHALL BE COVERED WITH A MINIMUM OF 2" ASPHALT CONCRETE TO BLEND IN WITH THE NEW SURFACING.
   C. EXTENSION RINGS ARE NOT ACCEPTABLE.
   D. ADJUSTMENTS AND ACCESSORIES SHALL BE PROVIDED AND INSTALLED FOR HEAVY TRAFFIC RATING.
27. PAVEMENT GRINDING:
   A. GRINDING AS NECESSARY TO ACHIEVE PROPER TRANSITIONS, CONFORMS, SLOPES, DRAINAGE AND COMPLIANCE WITH ACCESSIBILITY STANDARDS SHALL BE INCLUDED IN THE SCOPE OF WORK OF THIS PROJECT.
   B. AT CONFORMS, EXISTING PAVEMENT SHALL BE GROUND DOWN A MINIMUM OF 1". FEATHERING WILL NOT BE PERMITTED.
   C. FOR OVERLAY, GRIND AS NECESSARY TO ALLOW MINIMUM OVERLAY OF 1" TO NEW ELEVATIONS.
   D. GROUND AC SHALL BE REMOVED FROM THE JOB SITE AND DISPOSED OF IMMEDIATELY AFTER GRINDING.
   E. GROUND AREAS SHALL BE OVERLAID WITHIN FIVE (5) FIVE CALENDAR DAYS OF GRINDING.
28. CONFORM GRINDING
   A. ALL GRINDING OPERATIONS SHALL BE PERFORMED DURING THE REGULAR WORK HOURS, HOWEVER, SUBJECT TO OWNER'S APPROVAL, THE CONTRACTOR MAY EXTEND THE WORK HOURS FOR REASONS BENEFICIAL TO THE PROJECT OR OWNER.
   B. CONFORM GRINDING SHALL BE PERFORMED BY THE COLD PLANING METHOD. PLANING OF THE ASPHALT CONCRETE PAVEMENT SHALL NOT BE DONE BY THE HEATER PLANING METHOD.
   C. THE COLD PLANING MACHINE SHALL BE EQUIPPED WITH A CUTTER HEAD OF SUFFICIENT WIDTH AND CUTTER HEAD CONFIGURATION TO RESULT IN A UNIFORM CONDITION SUITABLE FOR PAVEMENT OVERLAYS AND SHALL BE OPERATED SO AS TO NOT PRODUCE FUMES OR SMOKE.
   D. ASPHALT THAT BECOMES LOOSE AFTER CONFORM GRINDING SHALL BE REMOVED AND DISPOSED OF BY THE CONTRACTOR AT THE CONTRACTOR'S EXPENSE.
   E. CONFORM GRINDING SHALL ONLY BE PERFORMED IMMEDIATELY BEFORE PAVING OPERATIONS.
   F. THE DEPTH, WIDTH AND SHAPE OF THE CUT SHALL BE AS INDICATED ON THE TYPICAL CROSS SECTIONS OR AS DIRECTED BY THE OWNER.
   G. THE FINAL CUT SHALL RESULT IN A UNIFORM SURFACE CONFORMING TO THE TYPICAL CROSS SECTIONS. THE OUTSIDE LINES OF THE PLANED AREAS SHALL BE NEAT AND UNIFORM.
   H. GRINDING OF ASPHALT CONCRETE PAVEMENT SHALL BE PERFORMED WITHOUT DAMAGING THE UNDERLYING PAVEMENT SURFACE TO REMAIN IN PLACE.
   I. CONFORM GRINDING SHALL BE DONE AT THE BEGINNING AND ENDING OF EACH PAVEMENT SECTION SUCH THAT THE FINAL ASPHALT SURFACE PROVIDES A SMOOTH TRANSITION TO THE ADJACENT PAVEMENT SURFACE.
   J. CONFORM GRINDING SHALL BE TO THE EXTENT INDICATED ON THE PLANS AND AS FIELD CONDITIONS NECESSITATE.
   K. IF THE CONFORM GRINDING OPERATION BEGINS TO PULVERIZE THE ASPHALT CONCRETE SURFACE THAT IS TO REMAIN INTACT, OR PENETRATES THE ENTIRE UNDERLYING ASPHALT SECTION, THE CONTRACTOR SHALL NOTIFY THE OWNER IMMEDIATELY. THE CONTRACTOR SHALL USE A SMALLER GRINDER OR MODIFY THE GRINDING PROCESS TO PREVENT FURTHER DAMAGE TO THE UNDERLYING PAVEMENT IN AREAS WHERE THE UNDERLYING PAVEMENT IS BEING PULVERIZED. IN LOCATIONS WHERE THE GRINDING PENETRATES THE ENTIRE UNDERLYING SURFACE, THE CONTRACTOR SHALL GRIND AN ADDITIONAL TWO INCH (2") DEPTH AFTER APPROVAL BY THE OWNER. AFTER THE ADDITIONAL GRINDING IS PERFORMED, A LAYER OF ASPHALT CONCRETE LEVELING COURSE SHALL BE PLACED AT THE DIRECTION OF THE OWNER.
   L. THE CONTRACTOR SHALL BE RESPONSIBLE FOR ALL DAMAGE TO COLD PLANING MACHINES CAUSED BY HITTING ANY HIDDEN OBJECTS DURING GRINDING OPERATIONS. IN ADDITION, THE CONTRACTOR SHALL BE RESPONSIBLE FOR THE COST OF REPAIRING ANY FACILITY THAT IS DAMAGED BY THE COLD PLANING MACHINE.
28. REPAIR / RESTORATION:
   A. COMPACT IN LAYERS, IF HOLE IS MORE THAT FOUR (4) INCHES DEEP. COMPACT LAYERS THOROUGHLY. COMPACT WITH EQUIPMENT MOST SUITED FOR SIZE OF JOB.
   B. ADEQUATE COMPACTION EQUIPMENT WILL YIELD SURFACE OF PATCH AT SAME ELEVATION AS THE SURROUNDING PAVEMENT. WHEN HAND TAMPING OR OTHER LIGHT COMPACTION METHODS ARE REQUIRED, LEAVE SURFACE OF COMPACTED PATCH SLIGHTLY HIGHER THAN ADJACENT PAVEMENT, PERMITTING PATCH TO BE FURTHER COMPRESSED BY TRAFFIC.
   C. CHECK RIDING QUALITY AND ALIGNMENT OF PATCH WITH A STRAIGHT EDGE OR STRING LINE. ALL EDGES SHALL CONFORM FLUSH.
   D. VERIFY ALL FINISHED SLOPES AND GRADES TO BE IN COMPLIANCE WITH APPLICABLE ACCESSIBILITY STANDARDS. REMOVE AND REPLACE ALL NON-CONFORMING CONDITIONS TO COMPLY FULLY WITH THIS PROVISION.
   E. VERIFY NO ABRUPT VERTICAL CHANGES IN LEVEL EXCEEDING 1/4" OCCUR. WHERE VERTICAL CHANGES IN LEVEL EXCEEDING 1/4" AND LESS THAN 1/2" DO OCCUR THEY MUST BE BEVELED AT 1V:2H OR LESS. REMOVE AND REPLACE OR FINISH ALL NON-CONFORMING CONDITIONS TO COMPLY FULLY WITH THIS PROVISION.
   F. PROVIDE ALL OTHER INCIDENTAL WORK NECESSARY TO COMPLETE THE ASPHALT CONCRETE IN ACCORDANCE WITH THE CONTRACT DOCUMENTS AND REFERENCED STANDARDS.
29. SLOPE OF ACCESSIBLE PARKING SPACES AND ACCESS AISLES SURFACE SLOPES OF ACCESSIBLE PARKING SPACES AND ASSOCIATED ACCESS AISLES SHALL BE THE MINIMUM POSSIBLE AND SHALL NOT EXCEED 1 UNIT VERTICAL TO 50 UNITS HORIZONTAL (2 % SLOPE) IN ANY DIRECTION. (CBC SEC. 1129B.3 ITEM #4 & CBC FIG.11B-18A THROUGH C).
30. CLEANING:
   A. UPON COMPLETION OF ASPHALT PAVING AND SURFACING OPERATION, THE ENTIRE WORK SITE SHALL BE CLEANED OF ALL WASTE, RUBBISH AND CONSTRUCTION DEBRIS OF ANY NATURE.
   B. BROOM CLEAN AREAS OF WORK AND REMOVE ALL EXTRA MATERIALS FROM JOB SITE.
31. FOG SEAL:
   A. FOG SEAL COAT ALL PAVING SHALL BE FOG SEALED.
   B. FOG SEAL AT MANUFACTURER'S RECOMMENDED RATE AND INSTRUCTIONS MINIMUM 0.05 GAL /SQ. YD.
31. SLURRY SEAL:
   A. ALL PAVIED AREAS SCHEDULED TO BE SLURRY SEALED: SLURRY SEAL COAT PARKING AREAS WITH TYPE I EMULSIFIED ASPHALT AT THE RATE OF 8-12 LBS / SY. SLURRY SEAL COAT DRIVEWAYS AND DRIVE AISLES WITH TYPE II SLURRY SEAL AT THE RATE OF 12-20 LBS / SY.
   B. SLURRY SEAL AT MANUFACTURER'S RECOMMENDED RATE AND INSTRUCTIONS PER ISSA TECHNICAL BULETIN 112.
   C. REPAIR ALL DEFECTS SUCH AS, BUT NOT LIMITED TO, ALIGATOR CRACKING. ALL CRACKS SHALL BE SEALED.
   D. APPLY IN ACCORDANCE WITH THE FOLLOWING:
      1. CALTRANS STANDARD SPECIFICATIONS SECTION 37-2 SLURRY SEAL AND SECTION 98 ASPHALT EMULSION (LATEST EDITIONS).
      2. INTERNATIONAL SLURRY SURFACING ASSOCIATION (ISSA) A105 RECOMMENDED PERFORMANCE GUIDELINES FOR EMULSIFIED ASPHALT SLURRY SEAL(LATEST EDITION).
      3. AMERICAN SOCIETY OF TESTING MATERIALS ASTM D 3910-98 STANDARD PRACTICES FOR DESIGN, TESTING AND CONSTRUCTION OF SLURRY SEAL; ASTM D977, D2397; AND AASHTO M140 AND M208.
   E. HUMIDITY 60% OR LESS / TEMPERATURE 65° F AND RISING BUT NOT ABOVE 105° F. DO NOT APPLY IF RAIN IS IMMINANT OR FREEZING ANTICIPATED WITHIN 48 HOURS. APPLT IN DAYTIME ONLY.

# GENERAL WALKWAY PAVING NOTES

1. SIDEWALKS, CURB RAMPS, AND COCNCRETE PAVED AREAS SHALL BE CONSTRUCTED OF PLAIN PORTLAND CEMENT CONCRETE WITH A MAXIMUM SLUMP OF 3 INCHES, A MINIMUM DEVELOPED COMPRESSIVE STRENGTH OF 2500 P.S.I. IN 28 DAYS, AND A MINIMUM UNIFORM THICKNESS OF 4 INCHES W/ #3 AT 18" oc EW WHERE INTENDED SOLELY FOR PEDESTRIAN TRAFFIC, AND 6 INCHES THICK W/ # 4 AT 18"oc EW WHERE MOTOR VEHICLES ARE LIKELY TO CROSS.
2. ALL WALKS SHALL HAVE A CROSS SLOPE OF 1/4 INCH PER FOOT AND SHALL NOT EXCEED A LONGITUDINAL SLOPE OF 1:20, EXCEPT AT DESIGNATED RAMPS THAT SHALL NOT EXCEED 1:12. PROVIDE A TACTIBLE WARNING SURFACE AT ALL RAMPS PER A.D.A. AND C.B.C. THE CONTRACTOR SHALL INSURE THAT ALL PROVISIONS OF A.D.A AND CALIFORNIA ACCESSIBILITY CODES ARE MET.
3. THE TOP OF THE CONCRETE SHALL BE AT AN ELEVATION NO LOWER THAN THE CROWN OF THE ADJACENT VEHICULAR WAY, AND NO HIGHER THAN 6 INCHES ABOVE THE CROWN UNLESS APPROVED BY THE ENGINEER TO MAKE A MORE NATURAL TRANSITION WITH THE ADJACENT LAND.
4. ISOLATION JOINTS (TYPE A JOINTS) SHALL BE PROVIDED BETWEEN EXISTING SLABS OR STRUCTURES AND FRESH CONCRETE, TO SEPARATE PEDESTRIAN SECTIONS FROM SECTIONS WHICH WILL ENCOUNTER VEHICLE TRAFFIC, TO SEPARATE FRESH PLACEMENT FROM CONCRETE WHICH HAS SET FOR MORE THAN 60 MINUTES, AND NO FARTHER APART THAN 100 FEET IN SIDEWALKS AND BIKEPATHS. JOINT MATERIAL SHALL BE SPECIFIED IN FDOT STANDARDS AND SPECIFICATIONS AND SHALL BE RUBBER, PLASTIC OR OTHER APPROVED NON-BIODEGRADABLE ELASTOMERIC MATERIAL. WOOD IS PROHIBITED.
5. CONTROL JOINTS (TYPE B JOINTS) SHALL BE TOOLED INTO THE FRESH CONCRETE TO A DEPTH EQUAL TO 1/4 THE SLAB THICKNESS AND SPACED APART A DISTANCE EQUAL TO THE WIDTH OF THE SLAB, AT MINIMUM SPACING OF 5', MAX SPACING OF 12'.
6. THE CONC. SURFACE SHALL BE MEDIUM BROOM FINISHED TO BE SLIP RESISTANT, AND SHALL MATCH AS CLOSELY AS POSSIBLE THE FINISH OF THE EXISTING ADJACENT SLABS AND ALL EDGES SHALL BE TOOLED TO ELIMINATE SHARP CORNERS.
7. THE BEARING SUBSURFACE SHALL HAVE ALL ORGANIC, LOOSE, AND DELETERIOUS MATTER REMOVED, AND THE REMAINING CLEAN SOIL SHALL BE SMOOTH, SOUND, AND SOLID. ANY FILL MATERIAL SHALL BE COMPACTED WITH A VIBRATORY OR IMPACT COMPACTION MACHINE IN MAXIMUM 12 INCH LIFTS OR COMPACTED WITH A HAND TAMPER IN MAXIMUM 4 INCH LIFTS. THE OWNER MAY REQUIRE A COMPACTION TEST FOR EACH LIFT IF THE TOTAL FILLED SECTION IS MORE THAN 12 INCHES DEEP OR IF THE SUBSURFACE HAS BEEN DISTURBED MORE THAN 12 INCHES DEEP. WHERE SUCH TEST IS REQUIRED, THE RESULTS SHALL SHOW A MINIMUM PROCTOR FIELD DENSITY OF 95 PERCENT.
8. ALL CONCRETE WORK IN THE RIGHT-OF-WAY SHALL BE INSPECTED BY THE CITY AND ARCHITECT AFTER THE SUBSOIL IS PREPARED AND THE FORMS ARE SET AND REINFRCING IS SECURED IN PLACE, BUT BEFORE THE CONCRETE PLACEMENT BEGINS. THE CONTRACTOR IS RESPONSIBLE FOR NOTIFYING OWNER, CITY AND ARCHITECT A MINIMUM OF TWO (2) WORKING DAYS PRIOR TO POURING CONCRETE.
9. THE CONTRACTOR SHALL BE RESPONSIBLE FOR PROTECTING THE FINISHED WORK FROM ALL DAMAGE AND VANDALISM UNTIL AFTER FINAL INSPECTIONS ARE COMPLETE AND THE OWNER ACCEPTS OR APPROVES THE WORK. ANY WORK DAMAGED OR VANDALIZED PRIOR TO ACCEPTANCE OR APPROVAL SHALL BE CUT OUT BETWEEN JOINTS AND REPLACED. REPAIRS ARE NOT ACCEPTABLE.
10. SIDEWALKS SHALL BE TINTED, STAINED, COLORED, OR COATED TO MATCH THE EXISTING CONCRETE TO REMAIN LOCAED IMMEDIATELY ADJACENT TO THE NEW CONCRETE. PROVIDE SCORE LINES AND EXPANSION JOINTS PER PLAN, DETAIL AND MATCH, ALIGN WITH AND REFLECT A CONSISTEN PATTERN OF THE ADJACENT CONCRETE REMAINING.
11. ALL FORMS SHALL BE REMOVED PRIOR TO ACCEPTANCE OR APPROVAL AND THE DISTURBED GROUND SHALL BE BACKFILLED, REGRADED, AND MULCHED SO THAT THE WEAR SURFACE OF THE CONCRETE IS REASONABLY FLUSH WITH THE ADJACENT GRADE (UNLESS BOUNDED BY CURBS).

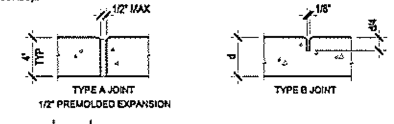


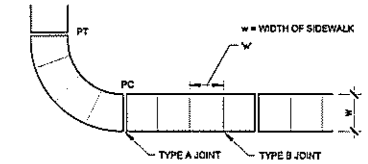


WIDTH OF WALK 5'-0" MIN PER PLAN U.O.N. (4'-0" MIN PER CODE)
SIDEWALKS SHALL BE 5 FOOT WIDE UNLESS OTHERWISE SHOWN ON PLANS.

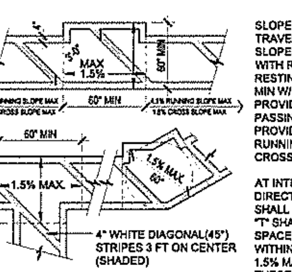


STRIPING LAYOUT SHALL BE PER PLAN, U.O.N. PLAN DIMENSIONS TAKE PRECEDENCE EXCEPT IN NO EVENT SHALL MARKINGS NOT MEET THE MINIMUM STANDARDS OF APPLICABLE STANDARDS.

SLOPE IN PREDOMINANT PATH OF TRAVEL SHALL BE 4.5% MAX SLOPES EXCEEDING 5% MUST COMPLY WITH REQUIREMENTS FOR RAMPS RESTING/PASSING SPACES OF 60"x60" MIN W/ 1.5% MAX CROSS SLOPE SHALL BE PROVIDED AT 400 FT INTERVALS OR LESS PASSING SPACE OF 60"x60" MUST BE PROVIDED WITHIN 200 FT (MAY HAVE RUNNING SLOPE OF 4.5% MAX AND CROSS SLOPE OF 1.5% MAX

AT INTERSECTIONS AND CHANGES IN DIRECTION GREATER THAN 30° SHALL BE PROVIDED WITH A LEVEL "T" SHAPED OR CIRCULAR TURNING SPACE (AS SHOWN) WITH A SLOPE WITHIN HATCHED AREA LIMITED TO 1.5% MAX IN ANY DIRECTION THESE SPACES MAY BE USED TO SATISFY RESTING TURNING SPACE REQUIREMENTS (ABOVE)

## (1) PAVEMENT MARKING PATH OF TRAVEL

1/4" = 1'-0" 02-081

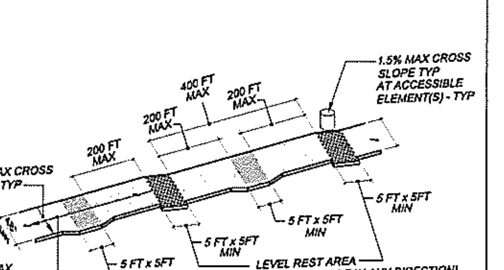


WHEELCHAIR RESTING / PASSING MANEUVERING MINIMUM SPACE REQUIREMENTS FOR CONTINUOUS GRADIENT WALKWAYS LESS THAN 60" WIDE

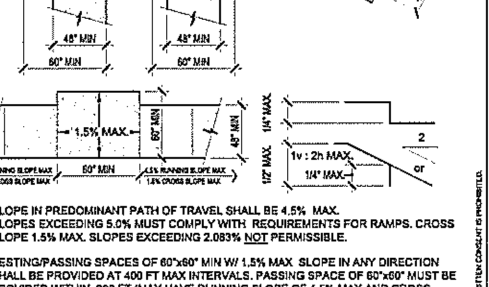


1. SLOPE IN PREDOMINANT PATH OF TRAVEL SHALL BE 4.5% MAX. SLOPES EXCEEDING 5.0% MUST COMPLY WITH REQUIREMENTS FOR RAMPS. CROSS SLOPE 1.5% MAX. SLOPES EXCEEDING 2.083% NOT PERMISSIBLE.
2. RESTING/PASSING SPACES OF 60"x60" MIN W/ 1.5% MAX SLOPE IN ANY DIRECTION SHALL BE PROVIDED AT 400 FT MAX INTERVALS. PASSING SPACE OF 60"x60" MUST BE PROVIDED WITHIN 200 FT (MAY HAVE RUNNING SLOPE OF 4.5% MAX AND CROSS SLOPE OF 1.5% MAX
3. WALKS SHALL BE FIRM STABLE AND SLIP RESISTANT, MEDIUM BROOM FINISH, TYPICAL, U.O.N.
4. SLOPE TO DRAIN WATER TOWARDS (E) DRAINAGE WAYS OR DRAINAGE STRUCTURES. STANDING WATER NOT ALLOWED.
5. AT INTERSECTIONS AND CHANGES IN DIRECTION GREATER THAN 30° SHALL BE PROVIDED WITH A LEVEL "T" SHAPED OR CIRCULAR TURNING SPACE (AS SHOWN) WITH A SLOPE WITHIN HATCHED AREA LIMITED TO 1.5% MAX IN ANY DIRECTION.
6. "T" INTERSECTION AND 60"x60" SPACES AT TURNS MAY BE USED TO SATISFY RESTING AND TURNING SPACE REQUIREMENTS (ABOVE).
7. NO ABRUPT VERTICAL CHANGES IN LEVEL ARE ALLOWED. LEVEL CHANGES MAY BE 1/2" IF SLOPED AT 2:h TO 1:v. AT (E) WALKS TO REMAIN, GRIND (E) CONDITIONS AS NECESSARY TO COMPLY. GROUND SURFACES SHALL HAVE A COEFFICIENT OF FRICTION OF NOT LESS THAN 0.8. VERTICAL CHANGES MORE THAN 1/2" MUST COMPLY WITH REQUIREMENTS FOR RAMPS.
8. WALKWAY WARPS SHALL BE PROVIDED TO PROVIDE ADEQUATE DRAINAGE AND TO RESULT IN FLUSH - CONFORMING FINISHED SURFACES AND AS NECESSARY FOR SMOOTH TRANSITIONS AT ALL ADJACENCIES AND INTERSECTIONS. SUCH WARPS SHALL NOT EXCEED SLOPE REQUIREMENTS FOR ACCESSIBILITY. ABRUPT CHANGES IN LEVEL NOT ALLOWED.
9. WHERE WALKS ADJOIN AN ELEMENT SUCH AS REFUSE OR RECYCLING RECEPTACLE, DRINKING FOUNTAIN, BULLETIN BOARD, ETC. PROVIDE A MINIMUM OF 30" x 48" LEVEL WHEELCHAIR RESTING SPACE CENTERED ON EACH ELEMENT. WHERE SUCH ELEMENT(S) OCCUR, PROVIDE ADJACENT OR OVERLAPPING 60"x60" PASSING / MANEUVERING SPACE. WHERE A BENCH IS PROVIDED A LEVEL 30"x48" MIN WHEELCHAIR SPACE SHALL ADJOIN AT LEAST ONE END OF AT LEAST (1) BUT NOT LESS THAN 5% OF ALL BENCHES.
10. SEE ADDITIONAL PATH OF TRAVEL AND WALKWAY NOTES SHEET A1.0., T0.1, T04, AND T0.5

## (4) ACCESSIBLE ROUTES

PATH OF TRAVEL - NOT TO SCALE


Craig D. Williams
Architecture
Interiors
Planning
Project
Management
295 Neva Street
Sebastopol, CA
95472
(707) 400-8325 (m)
(707) 823-2724 (o)
ArchWiseDesign@Gmail.com



Drawings, specifications and all ideas, designs, and arrangements indicated on these drawings and specifications are and shall remain the property of Craig Williams, architect and are intended to be used in connection with this specific project only. No part shall be copied or disclosed to others or otherwise be used in connection with any other work or project other than the specified work for which they have been prepared without the written consent of the architect. There shall be no changes or deviations from these drawings or the accompanying specifications without the written consent of the architect.

THESE DRAWINGS ARE INSTRUMENTS OF SERVICE AND ARE THE SOLE PROPERTY OF CRAIG D. WILLIAMS, ARCHITECT, COPYRIGHT ©2014-2015

Visual contact with these plans and specifications shall constitute conclusive evidence of acceptance of these restrictions.


CRAIG D. WILLIAMS
NOT FOR CONSTRUCTION UNLESS SIGNED BY THE ARCHITECT AND APPROVED BY JURISDICTIONS HAVING AUTHORITY

LICENSED ARCHITECT
CRAIG DOUGLAS WILLIAMS
No. C026642
REN. 10-31-17
STATE OF CALIFORNIA

08-21-2016

ACCESSIBILITY UPGRADES
IVES POOL AND POOL HOUSE
7400 WILLOW STREET
SEBASTOPOL, CA

PROJECT NUMBER:
082515.00
DATE:
26 JULY, 2016
DRAWN BY:
CW
CHECKED BY:
CW
REVISIONS:

PROJECT NOTES
**T0.4**


© THESE DRAWINGS ARE INSTRUMENTS OF SERVICE, AND ARE THE SOLE PROPERTY OF CRAIG WILLIAMS ARCHITECT; ANY USE WITHOUT WRITTEN CONSENT IS PROHIBITED.

# CONCRETE PAVEMENT / FLATWORKCONCRETE PAVING (CONTINUED)

1. SCOPE OF WORK:
THE WORK UNDER THIS SECTION SHALL INCLUDE ALL MATERIALS, LABOR AND EQUIPMENT NECESSARY TO ACHIEVE A FINISHED PRODUCT, INCLUDING BUT NOT LIMITED TO THE ITEMS IN THESE SPECIFICATIONS AND THOSE SHOWN ON THE WORKING DRAWINGS. WORK INCLUDES, BUT IS NOT LIMITED TO CONCRETE WALKS, SIDEWALKS, CURB RAMPS, CURBS, GUTTERS, AND VEHICLE RATED PAVEMENT - DRIVEWAYS, ETC.

2. STANDARDS:
ALL PROCEDURES AND MATERIALS UNDER THIS SECTION, WHERE NOT SPECIFICALLY STATED, SHALL BE IN ACCORDANCE WITH STANDARDS AND RECOMMENDATIONS OF THE AMERICAN CONCRETE INSTITUTE'S BUILDING CODE REQUIREMENTS FOR REINFORCED CONCRETE (ACI 318 - LATEST EDITION).

3. REFERENCES:

A. ACI 301 - STRUCTURAL CONCRETE FOR BUILDINGS.
B. ACI 302 - GUIDE FOR CONCRETE FLOOR AND SLAB CONSTRUCTION.
C. ACI 304 - RECOMMENDED PRACTICE FOR MEASURING, MIXING, TRANSPORTING AND PLACING CONCRETE.
D. ACI 305R - HOT WEATHER CONCRETING.
E. ACI 306R - COLD WEATHER CONCRETING.
F. ACI 308 - STANDARD PRACTICE FOR CURING CONCRETE.
G. ACI 318 - BUILDING CODE REQUIREMENTS FOR REINFORCED CONCRETE.
H. ANSI/ASTM D994 - PREFORMED EXPANSION JOINT FILLER FOR CONCRETE (BITUMINOUS TYPE).
I. ANSI/ASTM D1190 - CONCRETE JOINT SEALER, HOT-POURED ELASTIC TYPE.
J. ANSI/ASTM D1751 - PREFORMED EXPANSION JOINT FILLERS FOR CONCRETE PAVING AND STRUCTURAL CONSTRUCTION (NON-EXTRUDING AND RESILIENT BITUMINOUS TYPES).
K. ANSI/ASTM D1752 - PREFORMED SPONGE RUBBER AND CORK EXPANSION JOINT FILLERS FOR CONCRETE PAVING AND STRUCTURAL CONSTRUCTION.
L. CALIFORNIA UNIFORM BUILDING CODE, TITLE 24.
M. ASTM C33 - CONCRETE AGGREGATES.
N. ASTM C94 - READY-MIXED CONCRETE.
O. ASTM C 143 - STANDARD TEST METHOD FOR SLUMP OF HYDRAULIC CEMENT CONCRETE.
P. ASTM C150 - PORTLAND CEMENT.
Q. ASTM C260 - AIR ENTRAINING ADMIXTURES FOR CONCRETE.
R. ASTM C330 - LIGHT WEIGHT AGGREGATES FOR STRUCTURAL CONCRETE.
S. ASTM C494 - CHEMICALS ADMIXTURES FOR CONCRETE.
T. ASTM C618 - FLY ASH AND RAW OR CALCINATED NATURAL POZZOLAN FOR USE AS A MINERAL ADMIXTURE IN PORTLAND CEMENT CONCRETE.
U. ASTM A 82 - STANDARD SPECIFICATION FOR STEEL WIRE, PLAIN, FOR CONCRETE REINFORCEMENT.
V. ASTM A 185 - STANDARD SPECIFICATIONS FOR STEEL WELDED WIRE FABRIC, PLAIN, FOR CONCRETE REINFORCEMENT.
W. ASTM A 615 - STANDARD SPECIFICATION FOR DEFORMED AND PLAIN BILLET - STEEL BARS FOR CONCRETE REINFORCEMENT.

4. MATERIALS

A. BASE: UNTREATED BASE SHALL BE GRANULAR, NON-COHESIVE, WELL GRADED CRUSHER RUN, ¾" TO 1½" MAXIMUM AGGREGATE.

B. CEMENT: PORTLAND CEMENT: ASTM C150, TYPE I OR TYPE III, LOW ALKALI CEMENT IN CONTACT WITH SOIL - ASTM C150, TYPE II. TYPE III PORTLAND CEMENT MAY BE USED WHERE HIGH EARLY STRENGTH CONCRETE IS A REQUIREMENT AS APPROVED BY THE ARCHITECT. PORTLAND CEMENT SHALL CONFORM TO "STANDARD SPECIFICATIONS FOR PORTLAND CEMENT" (ASTM C150 - LATEST EDITION) AND SHALL BE TYPE I, IA, III OR IIIA.

C. COARSE AGGREGATES: CONCRETE AGGREGATES SHALL CONFORM TO "STANDARD SPECIFICATIONS FOR CONCRETE AGGREGATES" (ASTM C33 - LATEST EDITION). AGGREGATES SHALL BE CLEAN AND UNIFORMLY GRADED FROM 3/8 INCH TO MAXIMUM SIZE INDICATED OR SPECIFIED. MAXIMUM COARSE AGGREGATE SIZE FOR ALL MEMBERS LESS THAN EIGHT (8) INCHES IN THICKNESS SHALL BE 3/4 INCH. FOR MEMBERS WITH THICKNESS GREATER THAN OR EQUAL TO EIGHT (8) INCHES, THE MAXIMUM COARSE AGGREGATE SIZE SHALL BE 1-1/2 INCHES. WHEN NOT SPECIFIED, PROVIDE 1 INCH MAXIMUM SIZE (ASTM C33, SIZE NO. 57). DELETERIOUS MATERIALS IN AGGREGATES SHALL NOT EXCEED THE LIMITS SPECIFIED IN ASTM C33 AND UBC 2603.

D. FINE AGGREGATE: ASTM C33, UNIFORMLY GRADED FROM 3/8-INCH TO FINES, WASHED CLEAN. DELETERIOUS MATERIALS IN FINE AGGREGATES SHALL NOT EXCEED THE LIMITS SPECIFIED IN ASTM C33 AND UBC 2603.

E. LIGHTWEIGHT AGGREGATES: ASTM C330, UNIFORMLY GRADED TO MAXIMUM SIZE INDICATED OR SPECIFIED. WHEN NOT SPECIFIED, PROVIDE 3/4-INCH TO NO. 4 COARSE AGGREGATE COMBINED WITH ASTM C33 GRADED FINE AGGREGATE.

F. AGGREGATE FOR EXPOSED CONCRETE: AGGREGATE FOR CONCRETE WHICH WILL BE EXPOSED TO THE PUBLIC SHALL BE OBTAINED FROM ONE SOURCE FOR EACH TYPE OF AGGREGATE REQUIRED IN ORDER TO PRODUCE A UNIFORM COLOR.

G. IF REACTIVE AGGREGATES ARE PRESENT IN THE AREA, USE LOW ALKALI CEMENT CONTAINING LESS THAN 0.6 PERCENT ALKALIS.

H. FLY ASH: ASTM C618, CLASS C OR F. SUBMIT CHEMICAL AND PHYSICAL PROPERTIES. USE ONLY ONE TYPE AND SOURCE THROUGHOUT PROJECT.

I. SLAG: ASTM C989, GRADE 100 OR 120. USE ONLY ONE TYPE AND SOURCE THROUGHOUT PROJECT. K. MIXING WATER: ALL WATER USED IN CONCRETE SHALL BE FROM A POTABLE WATER SUPPLY.

L. ADMIXTURES: AIR-ENTRAINING ADMIXTURES SHALL CONFORM TO "STANDARD SPECIFICATIONS FOR AIR-ENTRAINED ADMIXTURES FOR CONCRETE" (ASTM C260 - LATEST EDITION).

M. CONCRETE MIX PROPORTIONS ACI-318 SHALL BE USED FOR DEVELOPING MIXTURE PORTIONS. THE CONTRACTOR SHALL FURNISH, FOR THE ARCHITECT'S APPROVAL, ALL RECORDS TO SHOW THAT HIS CONCRETE SUPPLIER IS IN COMPLIANCE WITH ALL PROVISIONS OF REFERENCED STANDARDS.

N. COLOR ADDITIVE: 1-1/2 POUND OF LAMPBLACK PER CUBIC YARD IS REQUIRED IN CONCRETE FOR STANDARD FINISH SIDEWALKS, WIDENED SIDEWALKS AND DRIVEWAYS.

O. CONCRETE ADDITIVES OTHER THAN LAMP BLACK MUST BE APPROVED IN ADVANCE BY THE INSPECTOR. ALL ADDITIVES, OTHER THAN COLOR ADDITIVES, MUST BE ADDED AT THE BATCH PLANT. RAPID CURING AGENTS, SUCH AS NACL OR CACL MAY NOT EXCEED 1% IN ANY CASE AND ARE STRICTLY PROHIBITED FROM CONCRETE WITH REINFORCING STEEL.

P. CURING COMPOUND SHALL CONFORM TO THE CURRENT STATE SPECS AND WHEN USED, SHALL BE SPRAYED ON THE CONCRETE WITHIN ONE HOUR AFTER FINISHING AT THE RATE OF ONE (1) GALLON PER TWO HUNDRED (200) SQUARE FEET.

R. REINFORCING STEEL:
i. PROVIDE NEW BILLET STEEL MANUFACTURED BY OPEN HEARTH PROCESS AND CONFORMING TO ASTM A 615, GRADE 60. STORE STEEL TO PROTECT IT FROM MECHANICAL INJURY AND RUST. AT TIME OF PLACEMENT, STEEL SHALL BE FREE FROM DIRT, SCALE, RUST, PAINT, OIL, OR OTHER INJURIOUS MATERIALS.
ii. COLD BEND REINFORCING STEEL TO SHAPES SHOWN. ONCE STEEL HAS BEEN BENT, IT MAY NOT BE RE-BENT.
iii. PROVIDE WIRE FABRIC CONFORMING TO ASTM A 82. USE FABRIC IN WHICH LONGITUDINAL AND TRANSVERSE WIRES HAVE BEEN ELECTRICALLY WELDED AT POINTS OF INTERSECTION. WELDS SHALL HAVE SUFFICIENT STRENGTH NOT TO BE BROKEN DURING HANDLING OR PLACING. CONFORM WELDING AND FABRICATION OF FABRIC SHEETS TO ASTM A 185.

5. EQUIPMENT:

A. CONFORM EQUIPMENT TO REQUIREMENTS OF ASTM C 94.

6. EXECUTION:

A. REINFORCING STEEL AND JOINT ASSEMBLIES A. PLACE REINFORCING STEEL AND JOINT ASSEMBLIES AND POSITION SECURELY AS INDICATED ON DRAWINGS. WIRE REINFORCING BARS SECURELY TOGETHER AT INTERSECTIONS AND SPLICES. BARS AND COATINGS SHALL BE FREE OF RUST, DIRT OR OTHER FOREIGN MATTER WHEN CONCRETE IS PLACED. SECURE REINFORCING STEEL TO CHAIRS.
B. POSITION PAVEMENT JOINT ASSEMBLIES AT REQUIRED LOCATIONS AND ELEVATIONS, AND RIGIDLY SECURE IN POSITION. INSTALL DOWEL BARS IN JOINT ASSEMBLIES, EACH PARALLEL TO PAVEMENT SURFACE AND TO CENTER LINE OF PAVEMENT, AS SHOWN.
C. CUT HEADER BOARDS, JOINT FILLER, AND OTHER MATERIAL USED FOR FORMING JOINTS TO RECEIVE EACH DOWEL BAR.
D. SECURE IN REQUIRED POSITION TO PREVENT DISPLACEMENT DURING PLACING AND FINISHING OF CONCRETE.
E. DRILL DOWELS INTO EXISTING PAVEMENT, SECURE WITH EPOXY, AND PROVIDE PAVING HEADERS AS REQUIRED TO PROVIDE RIGID PAVEMENT SECTIONS.
F. USE SUFFICIENT NUMBER OF CHAIRS FOR STEEL REINFORCEMENT BARS TO MAINTAIN POSITION OF BARS WITHIN ALLOWABLE TOLERANCES. PLACE REINFORCEMENT AS SHOWN ON DRAWINGS. IN PLANE OF STEEL PARALLEL TO NEAREST SURFACE OF CONCRETE, BARS SHALL NOT VARY FROM PLAN PLACEMENT BY MORE THAN 1/12 OF SPACING BETWEEN BARS. IN PLANE OF STEEL PERPENDICULAR TO NEAREST SURFACE OF CONCRETE, BARS SHALL NOT VARY FROM PLAN PLACEMENT BY MORE THAN 1/4".

7. FORMS:

A. INSPECT SCREEDS AND FORMS FOR SLOPE, REINFORCEMENT, INSERTS, AND EMBEDDED PARTS BEFORE BEGINNING CONCRETE PLACEMENT TO ENSURE ACCURATE CONFIGURATION, SIZE AND LOCATION.
B. MAKE ALL NECESSARY ADJUSTMENTS AND CORRECTIONS PRIOR TO PLACING CONCRETE.
C. ENSURE REINFORCEMENT, INSERTS, EMBEDDED PARTS AND FORMED JOINTS ARE NOT DISTURBED DURING CONCRETE PLACEMENT.

8. CONCRETE QUALITY:

A. ALL CONCRETE SHOWN ON THE WORKING DRAWINGS OR REFERRED TO IN THE SPECIFICATIONS SHALL BE FROM AN APPROVED BATCH PLANT AND SHALL HAVE A MINIMUM COMPRESSIVE STRENGTH OF 3000 PSI AT 28 DAYS AND A MAXIMUM WATER-CEMENT RATIO OF 0.64.
B. AIR ENTRAINMENT SHALL BE 5%, MORE OR LESS, 1% FOR CONCRETE WITH MAXIMUM AGGREGATE SIZE OF 1-1/2 INCHES AND SHALL BE 6%, MORE OR LESS, 1% FOR CONCRETE WITH A MAXIMUM AGGREGATE SIZE OF 3/4 INCH.
C. THE CONCRETE SHALL BE OF A CONSISTENCY TO WORK EASILY INTO CORNERS, ANGLES OF FORMS AND AROUND REINFORCEMENT.
D. SLUMP SHALL NOT EXCEED 4 INCHES.

9. MIXING AND PLACING CONCRETE:

A. PREPARATION OF EQUIPMENT AND PLACEMENT OF CONCRETE
B. BEFORE PLACEMENT, ALL EQUIPMENT FOR MIXING AND TRANSPORTING THE CONCRETE SHALL BE CLEANED AND ALL DEBRIS AND DELETERIOUS MATERIAL SHALL BE REMOVED FROM THE PLACES TO BE OCCUPIED BY THE CONCRETE.
C. FORMS SHALL BE THOROUGHLY WETTED (EXCEPT IN FREEZING WEATHER) OR OILED AND MASONRY FILLER UNITS THAT WILL BE IN CONTACT WITH CONCRETE SHALL BE WELL DRENCHED (EXCEPT IN FREEZING WEATHER).
D. WATER SHALL BE REMOVED FROM PLACE OF DEPOSIT BEFORE CONCRETE IS PLACED UNLESS OTHERWISE PERMITTED BY THE ARCHITECT.
E. ALL LATENTS AND OTHER UNSOUND MATERIAL SHALL BE REMOVED FROM HARDENED CONCRETE BEFORE ADDITIONAL CONCRETE IS ADDED.
F. EXPANSION JOINT MATERIAL SHALL BE PLACED AT ALL LOCATIONS WHERE CONCRETE IS PLACED AGAINST A STRUCTURE.

10 MIXING:

A. READY MIXED CONCRETE SHALL BE MIXED AND DELIVERED IN ACCORDANCE WITH "STANDARD SPECIFICATION FOR READY MIXED CONCRETE (ASTM C94 - LATEST EDITION). MIXING AND TRANSPORTING EQUIPMENT SHALL BE CAPABLE OF PROVIDING CONCRETE WHICH MEETS THE ASTM C94 REQUIREMENTS FOR UNIFORMITY.
B. DESIGN MIX TO PRODUCE NORMAL WEIGHT CONCRETE CONSISTING OF PORTLAND CEMENT, AGGREGATE, WATER-REDUCING ADMIXTURE, AIR-ENTRAINING ADMIXTURE, AND WATER TO PRODUCE FOLLOWING:
i. COMPRESSIVE STRENGTH: 3,500 PSI, MINIMUM AT 28 DAYS, UNLESS OTHERWISE INDICATED ON CONSTRUCTION DRAWINGS.
ii. SLUMP RANGE: 1 TO 3-INCHES AT TIME OF PLACEMENT
iii. AIR ENTRAINMENT: 5 TO 8 PERCENT
C. FOR JOB MIXED CONCRETE, THE MIXER SHALL BE ROTATED AT A SPEED RECOMMENDED BY THE MANUFACTURER. IF MIXER PERFORMANCE TESTS ARE NOT MADE, EACH BATCH OF 1 CUBIC YARD OR LESS SHALL BE MIXED FOR AT LEAST 1 MINUTE AFTER ALL MATERIALS ARE IN THE MIXER. THE MIXING TIME SHALL BE INCREASED 15 SECONDS FOR EACH ADDITIONAL CUBIC YARD OR FRACTION THEREOF. THE ENTIRE BATCH SHALL BE DISCHARGED BEFORE THE MIXER IS RECHARGED.

11. CONVEYING:

A. CONCRETE SHALL BE CONVEYED FROM THE MIXER TO THE PLACE OF FINAL DEPOSIT BY METHODS THAT WILL PREVENT SEPARATION OR LOSS OF MATERIALS.
B. EQUIPMENT FOR CHUTING, PUMPING AND PNEUMATICALLY CONVEYING CONCRETE SHALL BE OF SUCH SIZE AND DESIGN AS TO ENSURE A PRACTICALLY CONTINUOUS FLOW OF CONCRETE AT THE DELIVERY END WITHOUT SEPARATION OF MATERIALS.

12. PLACING:

A. CONCRETE SHALL BE DEPOSITED, AS NEARLY AS PRACTICABLE, IN ITS FINAL POSITION TO AVOID SEGREGATION DUE TO REHANDLING OR FLOWING.
B. CONCRETE SHALL BE PLACED AT SUCH A RATE THAT IT IS AT ALL TIMES PLASTIC AND FLOWS READILY.
C. NO CONCRETE CONTAMINATED BY FOREIGN MATERIAL SHALL BE USED NOR SHALL RETEMPERED CONCRETE BE USED UNLESS APPROVED BY THE ARCHITECT.
D. WHEN PLACING IS STARTED, IT SHALL BE CARRIED ON AS A CONTINUOUS OPERATION UNTIL PLACEMENT IS COMPLETED. DEPOSIT CONCRETE CONTINUOUSLY IN SUCCESSIVE BATCHES.
E. DISTRIBUTE CONCRETE IN MANNER THAT WILL REQUIRE AS LITTLE REHANDLING AS POSSIBLE. WHERE HAND SPREADING IS NECESSARY, DISTRIBUTE CONCRETE WITH SHOVELS OR BY OTHER APPROVED METHODS. USE ONLY CONCRETE RAKES IN HANDLING CONCRETE.
F. AT PLACEMENT INTERRUPTION OF MORE THAN 30 MINUTES, PLACE TRANSVERSE CONSTRUCTION JOINT AT STOPPING POINT.
G. TAKE SPECIAL CARE IN PLACING AND SPADING CONCRETE AGAINST FORMS AND AT LONGITUDINAL AND TRANSVERSE JOINTS TO PREVENT HONEYCOMBING.
H. ALL CONCRETE SHALL BE THOROUGHLY CONSOLIDATED DURING PLACEMENT. IT SHALL BE THOROUGHLY WORKED AROUND EMBEDDED FIXTURES AND INTO THE CORNERS OF THE FORMS. VOIDS IN EDGE OF FINISHED PAVEMENT WILL BE CAUSE FOR REJECTION.
I. PLACE CONCRETE IN ACCORDANCE WITH ACI 301; INCLUDING HOT AND COLD WEATHER PLACEMENT PROCEDURES.
J. PLACE CONCRETE WHEN AIR TEMPERATURE TAKEN IN SHADE AND AWAY FROM ARTIFICIAL HEAT IS ABOVE 35 DEGREES F AND RISING. DO NOT PLACE CONCRETE WHEN TEMPERATURE IS BELOW 40 DEGREES F AND FALLING.
K. PLACE CONCRETE WITHIN 90 MINUTES AFTER INITIAL WATER HAD BEEN ADDED. REMOVE AND DISPOSE OF CONCRETE NOT PLACED WITHIN THIS PERIOD.

13. FORM REMOVAL:

A. DO NOT REMOVE FORMS UNTIL CONCRETE HAS ATTAINED SUFFICIENT STRENGTH, CLAMPS OR TIE RODS MAY BE LOOSENED 24 HOURS AFTER CONCRETE IS PLACED, TIES, EXCEPT FOR SUFFICIENT NUMBER TO HOLD FORMS IN PLACE, MAY BE REMOVED AT THAT TIME.
B. MINIMUM CURING PERIOD PRIOR TO FORM REMOVAL:
i. AIR TEMPERATURE: ABOVE 60 DEGREES F: 3 DAYS.
ii. AIR TEMPERATURE: 50 DEGREES F TO 60 DEGREES F: 5 DAYS.
iii. AIR TEMPERATURE: 40 DEGREES F TO 50 DEGREES F: 7 DAYS.
iv. AIR TEMPERATURE: LESS THAN 40 DEGREES F: WHEN TEMPERATURE BELOW 40 DEGREES F PREVAILS, LEAVE FORMS UNTIL CONCRETE REACHES 75% OF 28-DAY DESIGN STRENGTH.

14. FINISH:

A. FINISH CONCRETE WALK SURFACES IN ACCORDANCE WITH ACI 301 AND AS LISTED BELOW.
B. WALKS, SIDEWALKS, CURB RAMPS AND PEDESTRIAN FLATWORK - MEDIUM BROOM - SLIP RESISTANT
C. LAMP BLACK: PROVIDE MINIMUM 1.5 POUNDS OF LAMP BLACK PER CUBIC YARD OF CONCRETE SHALL BE USED FOR ALL EXPOSED FLATWORK AND CONCRETE AT ALL UNPAINTED OR UNSTAINED CONCRETE EXPOSED TO VIEW AFTER PROJECT COMPLETION.
D. WHERE EXPOSED CONCRETE IS ADJACENT TO EXISTING CONCRETE TO REMAIN, ADJUST LAMPBLACK TO MATCH APPEARANCE OF EXISTING.
E. CURE AND PROTECT AS REQUIRED TO CONFORM TO REFERENCED STANDARDS.
F. PROTECT CONCRETE SURFACES TO REMAIN EXPOSED FROM CONSTRUCTION OPERATIONS, INCLUDING WHEEL TRAFFIC OF CONSTRUCTION EQUIPMENT. MARRED CONCRETE (SCRATCHES, TIRE MARKS, ETC.) WILL BE REJECTED.
G. HONEYCOMB OR EMBEDDED DEBRIS IN CONCRETE IS NOT ACCEPTABLE.
H. PATCH IMPERFECTIONS AS DIRECTED.

15. DEFECTIVE CONCRETE:

A. DEFECTIVE CONCRETE: CONCRETE NOT CONFORMING TO REQUIRED LINES, DETAILS, DIMENSIONS, SLOPES, FLATNESS, FINISH OR SPECIFIED REQUIREMENTS.
B. THE ARCHITECT WILL DETERMINE REPAIR OR REPLACEMENT OF DEFECTIVE CONCRETE, AT NO EXPENSE TO THE OWNER. ARCHITECT MAY BACK-CHARGE CONTRACTOR FOR TIME ASSOCIATED WITH SUCH REPAIRS
C. DO NOT PATCH, FILL, TOUCH-UP, REPAIR, OR REPLACE EXPOSED CONCRETE EXCEPT UPON EXPRESS DIRECTION OF ARCHITECT AND ACCEPTANCE BY OWNER FOR EACH INDIVIDUAL AREA.

16. SURFACE FLATNESS:

A. THE CONTRACTOR SHALL TEST AND VERIFY THE FLATNESS OF THE HARDENED PAVEMENT SURFACE USING A 10-FOOT STRAIGHTEDGE OR OTHER ARCHITECT-APPROVED DEVICE.
B. HIGH SPOTS OF 1/8 INCH IN 10 FEET OR LESS ARE ACCEPTABLE.
C. HIGH SPOTS IN EXCESS OF 1/8 INCH IN 10 FEET SHALL BE REMOVED AND REPLACED WITH NO ADDITIONAL COMPENSATION TO THE CONTRACTOR.
D. GRINDING MAY BE ACCEPTABLE ONLY ON APPROVAL BY OWNER.
E. IF TESTING REVEALS MORE THAN AN OCCASIONAL MINOR INFRACTION OF THE SPECIFIED STRAIGHTEDGE TOLERANCE, IT MAY INDICATE A MALFUNCTION OF THE PAVING EQUIPMENT OR IMPROPER PROCEDURES IN THE PAVING PROCESS. IF THIS OCCURS, PAVING SHOULD BE IMMEDIATELY DISCONTINUED UNTIL THE SOURCE OF THE TROUBLE CAN BE IDENTIFIED AND CORRECTED.

17. SURFACE IRREGULARITIES:

A. GRINDING, WHEN NECESSARY, MAY BE USED TO CORRECT SURFACE IRREGULARITIES ONLY WHEN APPROVED IN WRITING AND IN ADVANCE BY THE OWNER.
B. WITH THE OWNER'S APPROVAL, THE ARCHITECT MAY DIRECT THAT HIGH SPOTS EXCEEDING 1/8 INCH IN 10 FEET, BUT LESS THAN 1/2 INCH IN 10 FEET BE GROUND DOWN TO 1/8 INCH IN 10 FEET OR LESS.
C. THE ARCHITECT MAY DIRECT THAT CONCRETE HAVING HIGH SPOTS IN EXCESS OF 1/2 INCH IN 10 FEET BE REMOVED AND REPLACED WITH NO ADDITIONAL COMPENSATION TO THE CONTRACTOR.
D. THE LACK OF SUCH DIRECTION SHALL NOT ALLEVIATE THE CONTRACTOR FROM ITS RESPONSIBILITY TO PROVIDE SURFACES THAT COMPLY WITH FLATNESS REQUIREMENTS.
E. IF GRINDING IS APPROVED, THE WORK SHOULD BE ACCOMPLISHED IN A MANNER THAT DOES NOT ADVERSELY AFFECT EITHER THE PERFORMANCE OR THE APPEARANCE OF THE GROUND PAVEMENT. AFTER THE HIGH SPOT OR SPOTS HAVE BEEN GROUND DOWN, ADDITIONAL LIGHT GRINDING MAY BE NECESSARY TO LEAVE A NEAT RECTANGULAR AREA OF UNIFORM APPEARANCE. GRINDING MUST BE DONE PARALLEL WITH THE PATH OF TRAVEL CENTERLINE.
F. GRINDING, WHERE APPROVED, SHALL RESULT IN A SLIP-RESISTANT FINISH - WET COEFFICIENT OF FRICTION 0.8 MINIMUM.

18. CONCRETE JOINTS AND FILLERS:

A. SEPARATE SLABS ON GRADE FROM VERTICAL SURFACES WITH 1/2 INCH THICK JOINT FILLER.
B. PLACE CONCRETE CONTINUOUSLY BETWEEN PREDETERMINED EXPANSION, CONTROL, AND CONSTRUCTION JOINTS.
C. DO NOT INTERRUPT SUCCESSIVE PLACEMENT.

19. CONTROL / EXPANSION JOINTS:

A. SAW CUT JOINTS WITHIN 24 HOURS AFTER PLACING, USE 3/16 INCH THICK BLADE, CUT INTO 1/4 DEPTH OF SLAB THICKNESS.
B. PREFORMED EXPANSION JOINT MATERIAL A. BITUMINOUS FIBER AND BITUMINOUS MASTIC COMPOSITION MATERIAL CONFORMING TO ASTM D 994 AND ASTM D 1751.
C. JOINT SEALING COMPOUND A. CONFORM JOINT SEALANTS TO ONE OF SEALANT CLASSES DESCRIBED IN THIS SECTION. B. CONFORM HOT-POURED RUBBER-ASPHALT COMPOUND TO ASTM D 3405.
D. PROVIDE EXPANSION JOINTS CONFORMING TO ASTM A 1751 ALONG AND ACROSS SIDEWALK AT BACK OF CURBS, AT INTERSECTIONS WITH DRIVEWAYS, AT PERIMETER OF CURB RAMPS AND AT WALLS; AND ACROSS WALK AT INTERVALS NOT TO EXCEED 36-FT.
E. PROVIDE EXPANSION JOINT MATERIAL CONFORMING TO ASTM D 994 FOR SMALL RADIUS CURVES AND AROUND FIRE HYDRANTS AND UTILITY POLES. EXTEND EXPANSION JOINT MATERIAL FULL DEPTH OF SLAB.
F. FILL JOINTS NEATLY WITH JOINT SEALER TO PROPER DEPTH. POUR SUFFICIENT JOINT SEALER INTO JOINTS SO THAT, UPON COMPLETION, SURFACE OF CURED SEALER WITHIN JOINT WILL BE FLUSH TO ADJACENT SURFACE.
G. CONCRETE CURB AND GUTTER CONSTRUCTION WEAKENED PLANE JOINTS SHALL BE CONSTRUCTED AT 15-FOOT INTERVALS, EXCEPT THAT WHEN PORTLAND CEMENT CONCRETE PAVEMENT IS ADJACENT THERETO, THE JOINTS SHALL COINCIDE WITH THE WEAKENED PLANE JOINTS IN THE ADJACENT PAVEMENT.
H. THE JOINTS SHALL BE CONSTRUCTED TO A MINIMUM DEPTH OF 1-1/2 INCHES BY SCORING WITH A TOOL WHICH WILL LEAVE THE CORNERS ROUNDED WITH A 1/4 INCH RADIUS AND INSURE A FREE MOVEMENT OF THE CONCRETE AT THE JOINT.
I. EXPANSION JOINT FILLER STRIPS SHALL HAVE THE TOP EDGE PLACED AND SECURELY HELD 1/4 INCH BELOW THE SURFACE.
J. EXPANSION JOINTS SHALL BE EDGED WITH AN EDGING TOOL HAVING A RADIUS OF 1/4 INCH.
K. THE FINISHED SURFACE OF THE TOP OF CURB SHALL NOT VARY MORE THAN 0.01 FOOT ABOVE OR BELOW THE STAKED OR INTENDED FINISHED GRADE.

# CONCRETE WALK REPAIRS

1. EXISTING CONDITIONS OF NON-COMPLIANCE WITH ACCESSIBILITY STANDARDS AS APPLY REQUIRE REPAIR OR CONSTRUCTION OF ON-SITE PEDESTRIAN FACILITIES SUCH AS WALKS OR SIDEWALKS. THIS WILL REQUIRE REMOVAL AND REPLACEMENT OR REPAIRS. REMOVAL AND REPLACEMENT OR REPAIRS ARE REQUIRED BASED ON ANY ONE OF THE ITEMS INDIVIDUALLY OR A COMBINATION OF THE ITEMS LISTED BELOW.
2. REMOVAL AND REPLACEMENT REMOVAL AND REPLACEMENT OF COMPLETE PANELS IS REQUIRED WHEN ANY OF THE FOLLOWING CONDITIONS EXIST:
A. A VERTICAL SEPARATION OF MORE THAN 1/2-INCH AT EITHER A JOINT OR CRACK.
B. A HORIZONTAL SEPARATION OF 1/2- INCH OR MORE AT EITHER A JOINT OR CRACK.
C. THE CROSS SLOPE OF SIDEWALKS IS GREATER THAN 1/4" PER FOOT (2% / 1:50).
D. WATER PONDS DUE TO INSUFFICIENT CROSS SLOPE OR MISALIGNMENT.
E. SEVERELY ROUGH, UNEVEN SURFACE DUE TO SCALING OR SPALLING THAT WOULD CAUSE A TRIPPING HAZARD.
F. SEVERE CRACKING RESULTING IN MULTIPLE LOOSE OR UNSTABLE INDIVIDUAL PIECES WITHIN A PANEL.
3. GRINDING GRINDING IS REQUIRED WHEN ANY OF THE FOLLOWING CONDITIONS EXIST:
A. A VERTICAL SEPARATION BETWEEN 1/2-INCH AND 1-INCH AT THE JOINT.
B. GROUND SURFACES SHALL HAVE A MAXIMUM SLOPE OF 8.33% (1:12).
C. GROUND SURFACES SHALL BE ROUGHENED TO ACHIEVE A SLIP RESISTANT SURFACE FINISH WET COEFFICIENT OF FRICTION OF 0.8 MINIMUM.
4. CONCRETE GRINDING AND/OR ANGULAR SAW CUTTING IS CONSIDERED A TEMPORARY REPAIR. THEREFORE, GRINDING AND/OR ANGULAR SAW CUTTING IS ALLOWED AS A ONE-TIME, ALTERNATIVE MEANS OF ELIMINATING VERTICAL DISPLACEMENTS. IF THE CONCRETE BREAKS THROUGH DURING THE REPAIR PROCESS, COMPLETE REMOVAL AND REPLACEMENT OF THE ENTIRE PANEL WILL BE REQUIRED.
A. CRITERIA FOR ALLOWING GRINDING AND OR ANGULAR SAW CUTTING METHODS TO REMOVE VERTICAL DISPLACEMENTS ON CONCRETE SIDEWALKS OR WALKWAYS:
i. CONCRETE SLAB MUST NOT HAVE BEEN PREVIOUSLY REPAIRED.
ii. THE REMAINDER OF THE PANEL MUST BE FREE OF CHIPPED AND/OR SPALLED CONCRETE, AND SHALL NOT POND WATER.
iii. EXISTING CONCRETE SLAB MUST SLOPE TOWARD THE STREET, DRIVEWAY OR PARKING AREA AND SHALL NOT EXCEED THE ALLOWED CROSS SLOPES MANDATED BY STATE, FEDERAL AND/OR LOCAL ACCESSIBILITY STANDARDS.
iv. VERTICAL DISPLACEMENT MUST NOT BE CAUSED BY SETTLEMENT OF AN ADJACENT PANEL.
v. EXISTING CONCRETE SLAB SHALL BE AT LEAST 3-1/2 INCHES THICK.
vi. VERTICAL DISPLACEMENT SHALL NOT EXCEED 1-1/4 INCHES.
vii. VERTICAL DISPLACEMENT SHALL BE AT AN EXISTING DEEP JOINT AND/OR SCORE LINE OF THE SIDEWALK.
viii. SPACING WIDTH BETWEEN ADJACENT PANELS MUST NOT EXCEED 1/2 INCH.
ix. RESULTING CROSS SLOPE AFTER REPAIR MUST BE ABLE TO CONFORM TO ADJACENT PANELS.
x. IF ANY PANEL ON THE PROPERTY DOES NOT MEET THESE TEMPORARY REPAIR CRITERIA, THEN NO PANEL ON THE SITE MAYBE TEMPORARILY REPAIRED.
5. TEMPORARY REPAIRS, WHEN APPROVED BY THE OWNER IN WRITING, SHALL BE PERFORMED SO THAT THE SIDEWALK SURFACE HAS ESSENTIALLY THE SAME OR SLIGHTLY ROUGHER TEXTURE AS THE UNDAMAGED PORTION ON EITHER SIDE OF THE JOINT OR SCORE LINES.
6. REPAIRED SURFACE SHALL NOT BE SMOOTH OR POLISHED AND SHALL HAVE A NONSLIP SURFACE IN BOTH WET AND DRY CONDITIONS (COEFFICIENT OF FRICTION OF 0.8 MINIMUM).
7. TEMPORARY REPAIRS SHALL BE PERFORMED IN SUCH A MANNER AS TO PRODUCE A NEAT PERIMETER WITH NO STRAY MARKS. TEMPORARY REPAIRS SHALL NOT MAR OR OTHERWISE DEFACE ADJACENT CONCRETE.
8. REMOVE AND DISPOSE OF ALL TEMPORARY ASPHALT CONCRETE PATCHES PRIOR TO TEMPORARY REPAIR.
9. TEMPORARY REPAIRS SHALL BE PERFORMED USING A DRY OR WET WALK-BEHIND, VERTICAL CARBIDE GRINDING MACHINE; WALK BEHIND SCARIFIER; OR HAND HELD ANGULAR GRINDER/DIAMOND BLADE CUTTER THAT WILL LEAVE A NON-SLIP SURFACE.
10. MAINTAIN ADEQUATE DUST AND NOISE CONTROL PER COUNTY ORDINANCES DURING REPAIR OPERATIONS AND TAKE ALL NECESSARY PRECAUTIONS TO PREVENT FLYING DEBRIS.
11. COMPLY WITH ALL APPLICABLE COUNTY REGULATIONS PERTAINING TO AIR AND DRAINAGE POLLUTION, EROSION AND SEDIMENT CONTROLS AS SPECIFIED IN THE MUNICIPAL STANDARD SPECIFICATIONS.
12. ONCE CONCRETE HAS BEEN REPAIRED, THE AREA IS TO BE CLEANED OF ANY AND ALL LOOSE DEBRIS BEFORE GOING TO THE NEXT LOCATION.
13. ALL VERTICAL DISPLACEMENTS REMOVED BY TEMPORARY REPAIRS WILL REQUIRE A GRAYISH, CEMENTITIOUS, HIGH-PERFORMANCE POLYMER SURFACE TREATMENT, EQUIVALENT TO ARDEX CD, ARDEX CD FINE, OR APPROVED EQUAL. THIS PRODUCT IS TO BE MIXED PER MANUFACTURER'S RECOMMENDATIONS TO A CREAMY, SLURRY CONSISTENCY THEN APPLIED OVER A CLEAN, DRY CONCRETE SURFACE WITH A TROWEL OR SQUEEGEE. COLOR SHALL BE APPROVED BY THE OWNER. ONCE APPLIED, THE CEMENTITIOUS MATERIAL SHALL BE LIGHT-BROOM FINISHED BEFORE IT SETS FOR A REDUCED-SLIP SURFACE.
14. BEFORE THE APPLICATION OF THE CEMENTITIOUS, HIGH-PERFORMANCE POLYMER SURFACE TREATMENT, THE PERIMETERS OF THE REPAIRED AREA SHALL BE CONTAINED TO CREATE A STRAIGHT BACK LINE. THIS CAN BE ACCOMPLISHED BY USING TAPE TO OUTLINE THE DESIRED SURFACE AREA. EXISTING DEEP JOINTS SHOULD BE KEPT CLEAR OF ANY COATINGS, USE HAND TROWEL OR OTHER APPROPRIATE TOOLS, IF NECESSARY, TO REMOVE ANY RESIDUAL MATERIALS.
15. ELIMINATING VERTICAL DISPLACEMENTS BY MEANS OF A TEMPORARY REPAIR IS ONLY ALLOWED AT EXISTING DEEP JOINTS AND/OR SCORE LINES OF THE SIDEWALK, NOT AT INTERMEDIATE CRACKS.
16. IF THE CONCRETE BREAKS THROUGH DURING THE REPAIR PROCESS, COMPLETE REMOVAL AND REPLACEMENT OF THE ENTIRE PANEL WILL BE REQUIRED.
17. VERTICAL DISPLACEMENTS BETWEEN ½ INCH AND 1/2 INCH WILL REQUIRE A MINIMUM 1 INCH WIDE REPAIRED AREA.
18. VERTICAL DISPLACEMENTS GREATER THAN 1/2 INCH WILL REQUIRE A REPAIRED WIDTH EQUAL TO THE TWELVE TIMES THE INITIAL VERTICAL DISPLACEMENT.
19. THE FINAL PRODUCT IS SUBJECT TO APPROVAL BY THE OWNER AND THE COUNTY JURISDICTION, AND SHALL, AT A MINIMUM, PRESENT A FIRM STABLE, SLIP-RESISTANT, SMOOTH, UNBROKEN SURFACE BETWEEN THE PREVIOUSLY EXISTING CONCRETE SURFACE AND THE REPAIRED PORTIONS, WHERE THE TWO ADJOIN EACH OTHER.

# CONCRETE REPAIR METHODS

1. CONCRETE CURBS AND WALKS WHICH ARE DEFECTIVE FROM CRACKING, DISPLACEMENT, SPALLING, OR EXCESSIVE SURFACE CHECKING SHALL BE REPAIRED BY REMOVING AND REPLACING THE DEFECTIVE PORTIONS. 2. SURFACE CHIPS IN CURBS MAY BE REPAIRED BY AN EPOXY METHOD WHICH RESULTS IN A HARD SURFACED, NEAT PERMANENT REPAIR. SURFACE TEXTURE AND COLOR MUST MATCH ADJACENT CONCRETE. EPOXY ADHESIVE SHALL BE AN APPROVED TWO-PART EPOXY BONDING COMPOUND. SURFACES SHALL BE THOROUGHLYCLEANED PRIOR TO APPLICATION OF EPOXY. MORTAR SHALL HAVE CURING COMPOUND APPLIED. SURFACE PATCHING OF SIDEWALK WILL NOT BE ALLOWED.

3. WHEN DEFECTIVE PORTIONS OF CURBS OR WALKS ARE REMOVED, THEY SHALL BE REMOVED IN SEGMENTS BETWEEN SCORE MARKS AND / OR DEEP JOINTS. REPLACEMENT CONCRETE SHALL BE FORMED AND FINISHED TO THE SAME STANDARDS REQUIRED FOR NEW WORK. THE EDGE OF EXISTING ASPHALT PAVING SHALL NOT BE USED AS A CURB FORM UNLESS APPROVED BY THE ENGINEER. WHEN CONCRETE BEING REPLACED IS NOT POURED MONOLITHIC, #3 REBAR 12" LONG SHALL BE PLACED AT 18" ON CENTER AT MINIMUM OF 3" INTO EXISTING CONCRETE. EPOXY GROUT IF DRILLED.

4. THE DEFECTIVE PORTIONS OF DRIVEWAY APPROACHES SHALL BE REMOVED BY SAWING OUT ALONG SCORES OR JOINTS AND REPLACING.

5. CRACKING OF CURBS, WALKS AND DRIVEWAY APRONS WILL REQUIRE REMOVAL AND REPLACEMENT WHEN THE FOLLOWING SITUATIONS OCCUR:
A. WHEN AN INDIVIDUAL CRACK IS 3/32" WIDE OR WIDER (THE APPROXIMATE WIDTH OF A NEW 5 CENT PIECE);
B. WHEN TWO OR MORE CRACKS OF ANY WIDTH OCCUR BETWEEN SCORES AND/OR EXPANSION JOINTS.
C. WHEN THREE OR MORE CHIPS OCCUR IN AN 8' LENGTH OF CURB.
D. ANY CHIP IN SIDEWALK.

6. USE #3 REBAR, 12" LONG, TO DOWEL NEW CONCRETE TO EXISTING CONCRETE.

7. DO NOT DOWEL PRIVATE IMPROVEMENTS TO PUBLIC IMPROVEMENTS.

8. WHEN REPLACING CURB AND GUTTER, A 12" WIDE, 6" MIN. THICK A.C. DEEP LIFT PATCH (OR MATCH EXISTING AC, WHICHEVER IS GREATER) IS REQUIRED.

9. ALL CONCRETE SHALL BE 6-SACK WITH 1-LB / CY OF LAMP BLACK (3" MAX SLUMP) PER CALTRAN STANDARD SPECIFICATIONS UNLESS COLOR OTHERWISE NOTED ON THE PLANS.

# CONCRETE WALKS

1. ALL SIDEWALK CONSTRUCTION SHALL CONFORM TO THE AMERICANS WITH DISABILITIES ACT (2010 ADA), AMERICANS WITH DISABILITIES ACT ACCESSIBILITY GUIDELINES (2004 ADAAG); THE PROVISIONS OF THE LATEST STANDARDS OF AMERICANS WITH DISABILITIES ACT (ADA) DRAFT GUIDELINES FOR PUBLIC RIGHT OF WAY CHAPTER 11, SECTION 1101 TO 1111, CALIFORNIA BUILDING CODE (TITLE 24 C.C.R. - 2010 WITH LATEST ADOPTED AMENDMENTS).

2. EXISTING SIDEWALKS THAT DO NOT COMPLY SHALL BE REQUIRED TO BE REPAIRED, UPGRADED OR REPLACED TO MEET THE CBC AND ADA WITH THE MOST STRINGENT PROVISIONS GOVERNING.

3. THE MINIMUM WIDTH OF WALKS, SIDEWALKS , PEDESTRIAN PATHS OF TRAVEL SHALL BE FOUR (4) FEET, EXCEPT AT GATES AND DOORS OR OTHER OBSTRUCTIONS, IN WHICH CASE, THE WALK MAY BE REDUCED IN NET CLEAR WIDTH TO 32" MINIMUM FOR A DISTANCE NOT EXCEEDING 24". SIDEWALKS SHALL BE WIDENED TO A MINIMUM OF FIVE (5) FEET FOR A DISTANCE OF FIVE FEET AT INTERVALS NOT EXCEEDING 200 FEET, WITH SUCH WIDENED AREAS NOT EXCEEDING 2% MAXIMUM SLOPE IN ANY DIRECTION AT INTERVALS OF NO GREATER THAN 400 FEET. LEVEL LANDINGS OF 5 FEET X FIVE FEET SHALL BE PROVIDED AT INTERSECTIONS BETWEEN WALKS. LEVEL MANEUVERING SPACE SHALL ALSO BE PROVIDED AT GATES AND DOORS AND ADJACENT TO FIXTURES AND EQUIPMENT INTENDED FOR PUBLIC USE.

4. SIDEWALKS SHALL NOT BE INSTALLED IN SUCH A MANNER THAT THEY CONFLICT WITH OR ARE OBSTRUCTED BY POWER POLES, TELEPHONE POLES, FIRE HYDRANTS, TRAFFIC/STREET SIGNS, MAIL BOXES, TREES, BUILDINGS, BARRIERS, LIGHT POLES, OR ANY OTHER ELEMENT OR STRUCTURE. WHEN THERE IS AN EXISTING OR ANTICIPATED OBSTRUCTION, THAT OBSTRUCTING ELEMENT SHALL BE RELOCATED WHENEVER POSSIBLE. IF THE OBSTRUCTION CANNOT BE RELOCATED, THE SIDEWALK SHALL BE INSTALLED TO PROVIDE WHEELCHAIR ACCESS AROUND THE OBJECT AND SHALL PROVIDE AT LEAST THE REQUIRED SIDEWALK WIDTH.

5. SIDEWALKS SHALL BE CONSTRUCTED SO AS TO CONFORM IN A SMOOTH TRANSITION AND SHALL CONNECT VERTICALLY AND HORIZONTALLY WITH ADJOINING WALKS AND SIDEWALKS. THE CHANGE OF GRADE BETWEEN ADJACENT SURFACES SHALL BE LESS THAN 11%. THE CHANGE OF GRADE SHALL BE DEFINED AS THE ALGEBRAIC SUM OF THE ADJOINING SURFACE SLOPES. IF THE SUM OF GRADE CHANGES BETWEEN ADJACENT SURFACES IS GREATER THAN OR EQUAL TO 11%, A LEVELING STRIP (2% MAXIMUM SLOPE IN ANY DIRECTION), 2 FEET MINIMUM IN LENGTH (PARALLEL TO DOMINANT DIRECTION OF TRAVEL) AND EXTENDING THE FULL WIDTH OF THE WALK, SHALL BE PROVIDED TO TRANSITION THE ADJACENT SURFACES. ANY RUNNING SLOPE GREATER THAN 5% SHALL BE CONSTRUCTED AS A PEDESTRIAN RAMP OR CURB RAMP AS SHOWN ON THESE PLANS. NO SIDEWALK OR WALK SHALL BE CONSTRUCTED WITH A CROSS SLOPE GREATER THAN 2%.

6. REPLACEMENT OF CONCRETE WALKS AND SIDEWALKS SHALL BE WITH CLASS "A" CONCRETE CONFORMING TO CALTRANS STANDARD SPECIFICATIONS, MATCHING THE EXISTING THICKNESS, BUT IN NO EVENT LESS THAN FOUR (4) INCHES IN THICKNESS IN PEDESTRIAN ONLY AREAS AND A MINIMUM OF SIX (6) INCHESS THICKNESS WHERE PAVEMENT IS SUBJECT TO VEHICULAR TRAFFIC (NOTE ALSO THAT PAVEMENT EDGES ARE THICKENED AND REINFORCED WITH STTEL BARS).

7. THE CONCRETE SHALL BE PLACED ON COMPACTED GRAVEL, CRUSHED ROCK OR FLEXIBLE BASE MATERIAL, AND THE WIDTH AND LOCATION SHALL MATCH THE EXISTING SIDEWALK TO REMAIN. BASE SHALL BE TWO (2) INCHES MINIMUM IN PEDESTRIAN ONLY AREAS AND SIX (6) MINIMUM IN TRAFFIC AREAS.

8. ALL SIDEWALK REPLACEMENT SHALL BE EXTENDED TO THE NEAREST EXPANSION OR CONTROL JOINT IN THE EXISTING SIDEWALK.

| IMPROVEMENT TYPE | CONCRETE CLASS (SEE NOTES BELOW) | MAXIMUM SLUMP (INCHES) |
|---|---|---|
| CONCRETE PAVEMENT | 520-A-2500 | 3" |
| CURB, INTEGRAL CURB AND PAVEMENT, GUTTER, SIDEWALK, CURB RAMPS | 520-C-2500 or 520-C-2500P | 4" |
| EXTRUDED CURB, CURB & GUTTER | 520-C-2500 | 2" |
| DRIVEWAYS, DRIVEWAY APRONS, CROSS GUTTERS & SPANDRELS | 560-C-3250 or 565-C-3250P | 5" or 4" RESPECTIVELY |
| PIPE COLLARS, MANHOLES, CATCH BASINS, SIDEWALKS CULVERTS | 560-C-3250 or 565-C-3250P | 5" or 4" RESPECTIVELY |
| TRENCH BACKFILL SLURRY (2 SACK SLURRY) | 100-E-100 | 5" |
| TRAFFIC SIGNAL FOUNDATIONS, SURVEY MONUMENTS | 565-A-3500 | 4" |
| FENCE AND GUARDRAIL POST FOUNDATIONS | 503-C-2500 | 5" |
| CONCRETE NOT OTHERWISE SPECIFIED | 560-C-3250 or 565-C-3250P | 5" or 4" RESPECTIVELY |

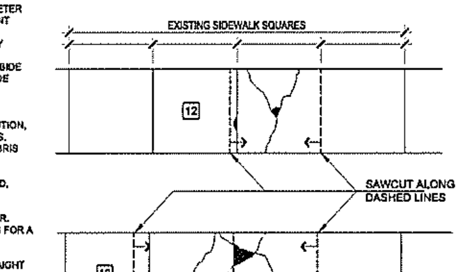


1. #3 DOWELS 12" LONG AT 2'-0" oc (TYP.) EPOXY GROUT IF DRILLED (ALL FLAT WORK)
2. CHIP GREATER THAN 2" IN JOINT - REPLACE SECTION - IF 2" OR LESS REPAIR CHIP
3. 2 OR MORE CRACKS WIDER THAN 1/4" - REPLACE SECTION
4. ANY ONE CRACK 3/32" OR WIDER - REPLACE SECTION
5. ANY CRACK CONTAINING SPALLS GREATER THAN 1" REPLACE SECTION
6. WHEEL LOAD CRACKS - REPLACE BOTH SECTIONS
7. REPAIR CHIP
8. 3 OR MORE CHIPS IN 8' LENGTH OF CURB - REPLACE SECTION.
9. ANY CHIP OVER 6" IN ANY DIMENSION - REPLACE SECTION.
10. ANY VERTICAL DISPLACEMENT OVER 1-1/2" - REPLACE SECTION. OTHERWISE GRIND FLUSH.
11. ANY GAP OVER 1-1/2" - FILL WITH APPROVED TRAFFIC RATED FILLER AND BACKER ROD.
12. IF ARROWS ARE THROUGH A PARTIAL SQUARE ADJACENT A SQUARE MARKED FOR REMOVAL AND REPLACEMENT, THE PARTIAL SQUARE MUST BE SAWCUT (OR WHERE VERTICAL DISPALCEMENT OCCURS - GROUND) TO REMOVE HAZARDS ON BOTH SQUARES (HATCHED AREA) OR THE ENTIRE ADJACENT SQUARE MUST BE REPLACED AS WELL. SQUARE DIMESIONS MUST BE MAINTAINED AS CLOSE AS POSSIBE TO A 4 FT x 4 FT PATTERN OR MATCH (E). SCORE LINES SHALL MATCH AND ALIGN W/ (E) AS WELL.

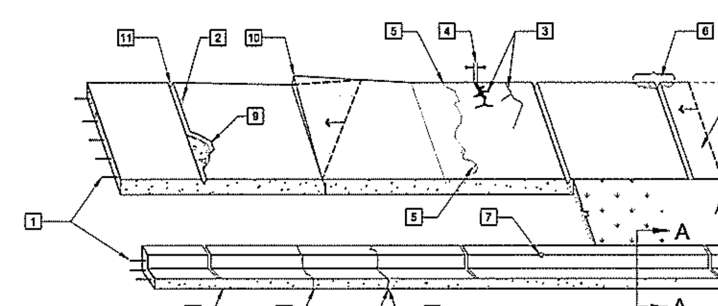


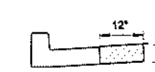


SECTION A-A
N.T.S.
NOTES:
1. PRESERVE AC (STRAIGHT EDGE).
2. REMOVE AND REPLACE 6" MINIMUM THICK AC DEEP LIFT PATCH OR MATCH EXISTING, WHICHEVER IS GREATER.

NOTES:
1. SKIN PATCHING OF FLATWORK WILL NOT BE PERMITTED.
2. REMOVE AND REPLACE ALL UNDERMINDED CONCRETE AS DIRECTED BY ARCHITECT.
3. WHERE DAMAGE EXTEND ACROSS A SCORE LINE (CONTROL, WEAKENED PLANE OR EXPANSION JOINT) AND PARTIALLY INTO A SQUARE ADJACENT TO A SQUARE MARKED FOR REMOVAL, THE PARTIAL SQUARE MUST BE SAWCUT TO REMOVE HAZARDS OR CONDITIONS OF NON-COMLIANCE ON BOTH SQUARES; OR THE ENTIRE EXTENT OF BOTH SQUARES MUST BE REMOVED AND REPLACED.
4. SQUARES SHALL BE MAINTAINED AS SQUARES MATCHING EXISTING CONDITIONS AS CLOSELY AS PRACTICABLE, UNLESS NOTED OR SHOWN OTHERWISE ON SPECIFC PLANS.

8 CONC. WALK REPAIR
N.T.S. 02-201-D

# MATERIALS

1. USE B AGGREGATE GRADATION WHEN PLACING CONDITIONS PERMIT. FLY ASH MEETING ASTM- C-618 / AASHTO M-295 IS ALLOWABLE - CLASS F FLY ASH.

2. CORROSIVE SOIL IN CONTACT WITH CONCRETE (HIGH SULFATES, HIGH CHLORIDES AND/OR LOW RESISTIVITY) SHALL UTILIZE CONCRETE MIX SPECIFICATION. APPROVED CORROSIVE SOIL ISOLATION METHODS SHALL INCLUDE CONCRETE INSTALLATION ON CRUSHED AGGREGATE BASE (CAB) OR CLASS II BASE.

3. USE CLASS II BASE OR CRUSHED AGGREGATE BASE (CAB) PER STANDARD PLAN OR STREET SECTION. NO CRUSHED MISCELLANEOUS BASE UNLESS SPECIFIED BY PLAN AND CITY ENGINEER. SIDEWALK, CURB AND GUTTER PLACEMENT ON 6 INCH MINIMUM, 90% COMPACTED NATIVE PER ASTM D1557 OR PER SPECIFIC SOILS ENGINEER RECOMMENDATION AS APPLICABLE.

4. PREMOLDED ½" THICK EXPANSION FELT PER CITY STANDARD 206 SHALL BE INSTALLED AT INTERVALS NO GREATER THAN 30 FT. FOR ALL TYPES OF CONCRETE FLAT WORK AND CURB/GUTTER, INCLUDING AT THE B.C. AND E.C. OF CURB RETURNS, AT ½ DELTA INTERVALS AT ALL RETURNS, AS WELL AS AT THE ENDS OF DRIVEWAYS AND AT ADJOINING STRUCTURES. EXPANSION FELT TO INCLUDE WOOD CAP FOR ALL FLATWORK AND NOT REQUIRED AT CURB AND GUTTERS. JOINTS IN SIDEWALKS TO BE IN ALIGNMENT WITH THOSE IN THE CURB & GUTTER WHEN THE TWO ARE ADJACENT. DEEP SCORE, ³⁄₁₆" WIDE WEAKENED PLANE JOINTS ( 1 ½" INCH DEEP FOR CURB & GUTTER, 1 INCH DEEP ALL OTHERS) SHALL BE INSTALLED AT 10 FT INTERVALS PER CITY STANDARD 206. WEAKENED PLANE JOINTS SHALL BE FINISHED WITH A ½ INCH RADIUS EDGING TOOL. POLYETHYLENE SHEETING (1 MIL OR GREATER THICKNESS) OR EQUIVALENT BOND BREAKER SHALL BE PLACED AT ALL BACK OF CURB/FLATWORK INTERFACES, INCLUDING STAMPED CONCRETE MEDIANS.

5. ALL DRIVEWAYS AND DRIVEWAY APPROACHES SHALL BE A MINIMUM OF 6 INCHES THICK. ALL SIDEWALKS SHALL BE A MINIMUM OF 4 INCHES THICK WITH SIDEWALKS AND OTHER FLATWORK SUBJECT TO VEHICULAR TRAFFIC A MINIMUM OF 6 INCHES THICK.

6. NEW CONCRETE SPLICES OR CONNECTIONS TO EXISTING CONCRETE SHALL HAVE #4 REINFORCING STEEL DOWELS INSTALLED A MINIMUM OF 3 INCHES INTO EXISTING AND NEW CONCRETE OR EQUIVALENT KEY OF A MINIMUM OF 4 INCHES.

7. COLORED CONCRETE SHALL BE CURED WITH W.R. MEADOWS VOCOMP-20 WATER BASED ACRYLIC CURING AND SEALING COMPOUND OR EQUAL.

NOTES:

1. A SIDEWALK TRIP HAZARD EXISTS IF THERE IS A VERTICAL HEIGHT DIFFERENCE BETWEEN ADJACENT SIDEWALK PANEL SECTIONS.
2. IF THE SIDEWALK IS RAISED NOT MORE THAN ONE (1) INCH AND THE CONCRETE EDGES ARE SOLID, THE CONCRETE MAY BE GROUND TO REMOVE THE TRIP HAZARD.
3. FOR A TRIP HAZARD OF ½", GRIND BACK A MINIMUM OF SIX (6) INCHES.
4. FOR A TRIP HAZARD OF BETWEEN ½" AND 1", GRIND BACK A MINIMUM OF TWELVE (12) INCHES.
5. FOR A TRIP HAZARD OF MORE THAN 1", REMOVE AND REPLACE ENTIRE PANEL.

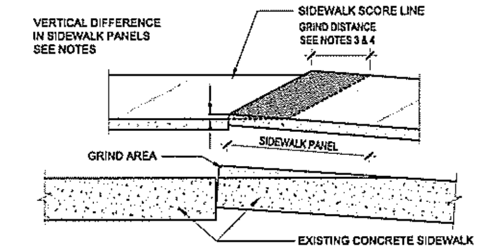


CONDITION AT ABRUPT CHANGES IN LEVEL
2 CONCRETE SIDEWALK GRINDING
1-1/2" = 1'-0" 02-201-D

Craig D. Williams
Architecture
Interiors
Planning
Project
Management
295 Neva Street
Sebastopol, CA
95472
(707) 400-8325 (m)
(707) 823-2724 (o)
ArchWiseDesign@Gmail.com

Drawings, specifications and all ideas, designs, and arrangements indicated on these drawings and specifications are and shall remain the property of Craig Williams, architect and are intended to be used in connection with the specific project only. No part shall be copied or disclosed to others or otherwise be used in connection with any other work or project other than the specified work for which they have been prepared without the written consent of the architect. There shall be no changes or deviations from these drawings or the accompanying specifications without the written consent of the architect.

THESE DRAWINGS ARE INSTRUMENTS OF SERVICE AND ARE THE SOLE PROPERTY OF CRAIG D. WILLIAMS, ARCHITECT. COPYRIGHT ©2014-2015

Visual contact with these plans and specifications shall constitute conclusive evidence of acceptance of these restrictions.

CRAIG D. WILLIAMS
NOT FOR CONSTRUCTION UNLESS SIGNED BY THE ARCHITECT AND APPROVED BY JURISDICTIONS HAVING AUTHORITY

LICENSED ARCHITECT
CRAIG DOUGLAS WILLIAMS
No. C026642
REN. 10-31-17
STATE OF CALIFORNIA

08.21.2016

ACCESSIBILITY UPGRADES
IVES POOL AND POOL HOUSE
7400 WILLOW STREET
SEBASTOPOL, CA

PROJECT NUMBER:
082515.00
DATE:
26 JULY, 2016
DRAWN BY:
CW
CHECKED BY:
CW
REVISIONS:

PROJECT NOTES

T0.5

© THESE DRAWINGS ARE INSTRUMENTS OF SERVICE AND ARE THE SOLE PROPERTY OF CRAIG WILLIAMS ARCHITECT. ANY USE WITHOUT WRITTEN CONSENT IS PROHIBITED.

Aug 23, 2016 - 11:05am cwilliams C:\Documents and Settings\cwilliams\Desktop\CLIENTS\SEBASTOPOL CITY\IVES\CD-T0.6.dwg

## WHEEL STOPS/CURBING

1. CONTINUOUS CONCRETE CURBING AT LEAST SIX INCHES HIGH AND SIX INCHES WIDE SHALL BE PROVIDED FOR PARKING SPACES LOCATED ADJACENT TO WALKS, PEDESTRIAN WAYS, FENCES, WALLS, PROPERTY LINES, LANDSCAPED AREAS, AND STRUCTURES. INDIVIDUAL WHEEL STOPS MAY BE PROVIDED IN LIEU OF CONTINUOUS CURBING WHEN THE PARKING IS ADJACENT TO A LANDSCAPED AREA, AND THE DRAINAGE IS DIRECTED TO THE LANDSCAPED AREA, SUBJECT TO THE APPROVAL OF THE REVIEW AUTHORITY.
2. WHEN PROVIDED, WHEEL STOPS SHALL BE PLACED TO ALLOW FOR TWO FEET OF VEHICLE OVERHANG AREA WITHIN THE DIMENSION OF THE PARKING SPACE. WHEN PROVIDED TO PREVENT ENCROACHMENT OF VEHICLES OVER WALKS AND REDESTRIAN PATHS OF TRAVEL, WHEEL STOPS SHALL BE PLACED TO RESULT IN NOT LESS THAN4 FEET OF WIDTH IN THE ACCESSIBLE PATH OF TRAVEL WHEN A VEHICLE IS PARKED IN THE PARKING SPACE. SEE CBC 11B-502.7.2.
3. EXISTING UNDAMAGED WHEEL STOPS IN GOOD CONDITION SHALL BE TEMPORARILY REMOVED, PROTECTED, STORED, AND REINSTALLED AT THIS PROJECT. WHEN THERE IS AN INSUFFICIENT NUMBER OF EXISTING UNDAMAGED WHEEL STOPS IN GOOD CONDITION NEW CONCRETE WHEEL STOPS MATCHING THE EXISTING RE-USED CONCRETE WHEEL STOPS SHALL BE PROVIDED. WHEEL STOPS SHALL BE PROVIDED WHERE INDICATED ON DRAWINGS. IN THE PRESENCE OF THE OWNER'S REPRESENTATIVE, CONTRACTOR SHALL INSPECT THE SITE AND IDENTIFY THE NUMBER AND CONDITION OF EXISTING CONCRETE WHEEL STOPS.
4. APPLY ADHESIVE TO WHEEL STOPS AS RECOMMENDED BY WHEEL STOP AND MASTIC MANUFACTURERS. APPLY ONLY TO THOROUGHLY CLEANED AND CURED SURFACES ACCORDING TO ADHESIVE MANUFACTURER'S RECOMMENDATIONS. POSITION WHEEL STOPS AT LOCATIONS INDICATED ON THE PLANS. PIN CONCRETE WHEEL STOPS WITH A MINIMUM OF TWO (2) HOT DIPPED GALVANIZED DOWELS 10 INCHES MINIMUM IN LENGTH DRIVEN INTO PAVEMENT BENEATH AND FLUSH TO THE TOP OF THE WHEEL STOP.
5. PAINT ALL WHEEL STOPS WHITE EXCEPT AT DESIGNATED ACCESSIBLE STALLS WHERE WHEEL STOPS ARE TO BE PAINTED DARK FEDERAL BLUE.

## PCC TRANSITIONS

1. PORTLAND CEMENT CONCRETE (PCC) PAVEMENT SECTIONS AND DRIVEWAY TRANSITIONS SHALL BE CONSTRUCTED AS SHOWN ON THE PLANS AND AS DIRECTED BY THE AHJ.
2. DRIVEWAY TRANSITIONS SHALL CONFORM TO DETAILS SHOWN ON THE PLANS, EXCEPT AS MODIFIED TO FIT ACTUAL FIELD CONDITIONS AND AS DIRECTED BY THE OWNER.
3. PCC SHALL BE MINIMUM 6" THICK OVER MINIMUM 4" OF AGGREGATE BASE COMPACTED TO 95% MAXIMUM DRY DENSITY.
4. PORTLAND CEMENT CONCRETE SHALL CONFORM TO THE REQUIREMENTS OF SECTION 90-10, "MINOR CONCRETE" AND SECTION 73, "CONCRETE CURBS AND SIDEWALKS" OF THE CALTRANS STANDARD SPECIFICATIONS AND THESE TECHNICAL SPECIFICATIONS.

## UTILITY GRADE BOXES

1. EXISTING UNDERGROUND UTILITY LINES ARE KNOWN TO BE PRESENT, HOWEVER ARE NOT NECESSARILY SHOWN OR NOTED ON THESE PLANS, AND IF SHOWN ARE NOT NECCESSARILY ACCURATE OR RELIABLE. THE CONTRACTOR SHALL BE RESPONSIBLE FOR LOCATING AND FIELD VERIFYING THE LOCATION OF ALL EXISTING UTILITIES AND UTILITY FEATURES PRIOR TO THE START OF CONSTRUCTION ACTIVITIES AND PROTECTING ALL FACILITIES DURING CONSTRUCTION.
2. DAMAGE CAUSED BY THE CONTRACTOR TO EXISTING FACILITIES SHALL BE REPAIRED WITHIN 24 HOURS AT THE SOLE EXPENSE OF THE CONTRACTOR.
3. THE CONTRACTOR SHALL NOTIFY AND COORDINATE THE WORK OF IDENTIFYING AND MARKING UTILITY FACILITIES WITH THE RESPECTIVE UTILITY COMPANIES. THE CONTRACTOR IS REQUIRED TO CALL UNDERGROUND SERVICE ALERT (USA) AT 811 FORTY-EIGHT (48) HOURS IN ADVANCE OF ANY EXCAVATION ACTIVITY.
4. THE CONTRACTOR SHALL SUBMIT TO THE OWNER COPIES OF ALL USA CONFIRMATION NUMBERS INCLUDING ASSOCIATED DOCUMENTATION.

   NOTE: NOT ALL UTILITY PROVIDERS ARE NECESSARILY SUBSCRIBERS TO USA, HOWEVER, IT SHALL REMAIN THE CONTRACTOR'S RESPONSIBILITY TO LOCATE UTILITIES.

5. WITHIN AREAS DESIGNATED FOR AC PAVEMENT GRINDING, PULVERIZING OR PAVEMENT REPAIR OR OVERLAY, ALL EXISTING FACILITIES (E.G. UTILITY MANHOLE FRAME AND COVERS, CLEANOUTS, BOXES, GAS AND WATER VALVE BOXES, SURVEY MONUMENT BOXES AND OTHER UTILITY FACILITIES) SHALL BE REMOVED AND THEN REPLACED / RESET AND ADJUSTED TO FINAL GRADE IN CONFORMANCE WITH THE REQUIREMENTS OF THE APPROPRIATE UTILITY AGENCY, AHJ OR AS DIRECTED BY THE OWNER.
5. THE VARIOUS UTILITY AGENCIES SHALL BE NOTIFIED IN WRITING BY THE CONTRACTOR OF HIS SCHEDULE, AND ANY ADJUSTMENTS THERETO, PRIOR TO THE COMMENCEMENT OF WORK.
6. BEFORE REMOVING MANHOLE FRAMES AND COVERS, CLEANOUTS, BOXES, VALVE BOXES, AND MONUMENT BOXES, THE CONTRACTOR SHALL REFERENCE THE LOCATION OF AND INVENTORY THE FACILITIES TO BE ADJUSTED. THE CONTRACTOR SHALL RECORD THE EXACT LOCATION AND TYPE OF FACILITY BY LABELING THE ASSEMBLY WITH NUMBERS AT THE LOCATION VISIBLE FOR VERIFICATION. THE LABELING SHALL INCLUDE FACILITY SITE, COLLAR, AND LID TO ENSURE PROPER MATCH OF HARDWARE WHEN FACILITY ADJUSTMENT IS COMPLETE AT THE CONCLUSION OF PROJECT.
7. ANY HARDWARE DAMAGED BY THE CONTRACTOR'S OPERATIONS SHALL BE TIMELY REPLACED AT THE CONTRACTOR'S SOLE EXPENSE. FRAMES AND COVERS SHALL BE REMOVED, TRANSPORTED AND STORED WITHOUT DAMAGE. ANY ITEMS DAMAGED SHALL BE REPLACED AT THE CONTRACTOR'S EXPENSE. PRE-EXISTING DAMAGE MUST BE BROUGHT TO THE OWNER'S ATTENTION IN WRITING PRIOR TO COMMENCEMENT OF ANY WORK.
8. UTILITY COVERS SHALL BE RAISED BY EXCAVATING THE FRAME AND COVER IN A NEAT LINE WITH A DIMENSION NOT GREATER THAN NECESSARY TO LOOSEN AND ADJUST THE FRAME WITH THE COVER AND THE CONCRETE COLLAR. ADJUSTMENTS SHALL BE ACCOMPLISHED BY REMOVING THE EXISTING CONCRETE COLLAR AROUND THE FRAME, INSTALLING ADJUSTING RINGS SUITABLE TO TYPE AND COMPATIBLE WITH THE CONFIGURATION OF THE ASSEMBLY, RAISING THE FRAME AND COVER, AND CONSTRUCTION OF A NEW CONCRETE COLLAR. THE CONCRETE COLLAR SHALL BE CONSTRUCTED SO THAT THE TOP OF THE COLLAR IS NO GREATER THAN THREE INCHES AND NO LESS THAN TWO INCHES BELOW THE EXISTING PAVEMENT GRADE SURROUNDING THE FACILITY. THE VOID BETWEEN THE TOP OF THE CONCRETE COLLAR AND THE FINISH GRADE OF THE PAVEMENT AROUND THE COLLAR SHALL BE PAVED TO FINISH GRADE WITH PAVEMENT TO MATCH THE SCHEDULED SURROUNDING PAVEMENT OR EXISTING PAVEMENT WHERE SAME SHALL REMAIN. PAVING SHALL BE AS SPECIFIED ELSEWHERE IN THESE TECHNICAL SPECIFICATIONS.
9. ALL EXISTING VALVE AND MONUMENT BOXES SHALL BE REMOVED BEFORE PAVING AND REPLACED AFTER PAVEMENT IS PLACED. WATER VALVES MUST BE ACCESSIBLE IMMEDIATELY AFTER PAVING AND WATER VALVE COVERS MUST BE RAISED WITHIN 48 HOURS OF PAVING. ALL AREAS WHERE STRUCTURES WERE RAISED TO GRADE MUST BE PAVED WITHIN 24 HOURS OR THE CONTRACTOR SHALL BE REQUIRED TO FURNISH TEMPORARY PAVING.
10. ADJUSTMENT OF UTILITY BOXES BY THE USE OF EXTENSION RINGS SHALL NOT BE ALLOWED. CASINGS OR BOXES TO BE ADJUSTED SHALL BE REMOVED AND REPLACED WITH NEW COVERS AND FRAMES. COVERS IN TRAFFIC AREAS SHALL BE NON-ROCKING, AND DESIGNED FOR A WHEEL LOAD OF 15,000 POUNDS MINIMUM (H-20 RATED).

## PAVEMENT MARKINGS AND STRIPING

PAINTED TRAFFIC STRIPES AND PAVEMENT MARKINGS - GENERAL REQUIREMENTS

THIS WORK SHALL CONSIST OF PAINTING TRAFFIC STRIPES AND PAVEMENT MARKINGS, INCLUDING APPLYING GLASS BEADS. ALL TRAFFIC STRIPING AND PAVEMENT MARKINGS COVERED BY THE ASPHALT CONCRETE OVERLAY OR OTHERWISE DAMAGED BY THE CONTRACTOR'S OPERATIONS SHALL BE REPLACED IN KIND.

APPROXIMATE LOCATIONS OF ALL PAVEMENT MARKINGS ARE SHOWN ON THE PLANS AND REFERENCED DETAILS.

EQUIPMENT, MIXING, SURFACE PREPARATION, APPLICATION, AND TOLERANCES FOR FURNISHING AND APPLYING PAINTED TRAFFIC STRIPING AND PAVEMENT MARKINGS SHALL CONFORM TO SECTION 84, "TRAFFIC STRIPES AND PAVEMENT MARKINGS" OF THE CALIFORNIA DEPARTMENT OF TRANSPORTATION STATE STANDARD SPECIFICATIONS AND THESE TECHNICAL SPECIFICATIONS.

MATERIALS: PAINT TYPE SHALL BE WATERBORNE TRAFFIC LINE IN ACCORDANCE WITH SECTION 84-3 OF THE STATE STANDARD SPECIFICATIONS AND SHALL BE APPLIED IN TWO (2) COATS. AT LEAST 48 HOURS SHALL ELAPSE BETWEEN APPLICATION OF A BITUMINOUS SEAL COAT AND PERMANENT PAVEMENT MARKING.

1. WORK INCLUDED:
   - A. PROVIDE PAVEMENT MARKINGS ON ASPHALT / CONCRETE AND ON CURBS IN THE ARRANGEMENTS AS DESCRIBED ON PLANS/DRAWINGS.
   - B. THIS WORK SHALL CONSIST OF PAINTING TRAFFIC LINES AND MESSAGES ON CURBS, WHEEL STOPS AND PAVEMENTS AT THE LOCATIONS AS SHOWN ON THE PLANS, OR DIRECTED BY THE DESIGN ARCHITECT AND AS SPECIFIED IN THESE SPECIFICATIONS.
   - C. THE TRAFFIC STRIPING AND PAVEMENT MESSAGE MARKINGS SHALL CONFORM TO THE STANDARDS, DIMENSIONS, AND DETAILS AS SPECIFIED IN THE FOLLOWING:
     - i. THE "MANUAL ON UNIFORM TRAFFIC CONTROL DEVICES FOR STREETS AND HIGHWAYS," U.S. DEPARTMENT OF TRANSPORTATION, FEDERAL HIGHWAY ADMINISTRATION
     - ii. THE "TRAFFIC MANUAL," STATE OF CALIFORNIA, BUSINESS AND TRANSPORTATION AGENCY, DEPARTMENT OF TRANSPORTATION
     - iii. THE AMERICANS WITH DISABILITIES ACT (2010)
     - iv. THE AMERICANS WITH DISABILITIES ACT ACCESSIBILITY GUIDELINES (2004)
     - v. THE CALIFORNIA BUILDING CODE (CBC) 1129B.3 AND 1129B.4 (2010) AND CBC FIGURES 11B-18A, 11B-18B AND 11B-18C AS APPLY TO THE PARTICULAR CONFIGURATION INDICATED ON THE PLANS AND DETAILS.
2. STRIPING AND IDENTIFICATION. PARKING SPACES SHALL BE CLEARLY OUTLINED WITH FOUR-INCH WIDE LINES PAINTED ON THE PARKING SURFACE.
3. ACCESSIBLE PARKING STRIPING AND PAVEMENT MARKINGS:
   - A. ACCESS AISLE MUST BE PROVIDED ON THE PASSENGER SIDE OF THE VEHICLE FOR SINGLE SPACES WHEN THE VEHICLE IS GOING FORWARD INTO THE PARKING SPACE. WHEN MORE THAN ONE ACCESSIBLE SPACE IS PROVIDED, THE ACCESS AISLE CAN BE LOCATED IN THE CENTER BETWEEN THE ACCESSIBLE SPACES.
   - B. ACCESS AISLES MUST ALWAYS BE PROVIDED ON THE PASSENGER SIDE FOR VAN-ACCESSIBLE SPACES.
   - C. THE WORDS "NO PARKING" SHALL BE PAINTED ON THE GROUND WITHIN EACH LOADING AND UNLOADING ACCESS AISLE. THIS NOTICE SHALL BE PAINTED IN WHITE LETTERS NO LESS THAN 12 INCHES HIGH AND LOCATED SO THAT IT IS VISIBLE TO TRAFFIC ENFORCEMENT OFFICIALS. CENTER BETWEEN THE SIDES OF THE ACCESS AISLE UNLESS OTHERWISE NOTED.
   - D. SEE DRAWINGS FOR CONFIGURATION AND DETAILED LAYOUT OF PAVEMENT MARKINGS.
4. USE EXPERIENCED PERSONNEL TRAINED IN APPLYING THE PRODUCTS AND OPERATING THE EQUIPMENT REQUIRED FOR PROPERLY PERFORMED WORK.
5. NEW PAVEMENT SURFACES AND THOSE RECEIVING A FOG SEAL OR SLURRY SEAL SHALL BE ALLOWED TO CURE FOR NOT LESS THAN THE MINIMUM PERIOD REQUIRED BY PAINT MANUFACTURER BEFORE APPLICATION OF MARKING MATERIALS.
6. PAVEMENT MARKING PAINT REFERENCE STANDARDS:
   - A. AMERICAN ASSOCIATION OF STATE HIGHWAY AND TRANSPORTATION (AASHTO)
     - i. AASHTO M248 - READY-MIXED WHITE, BLUE AND YELLOW TRAFFIC PAINTS
   - B. ASTM INTERNATIONAL (ASTM)
     - i. ASTM D4414 - STANDARD PRACTICE FOR MEASUREMENT OF WET FILM THICKNESS BY NOTCHED GAUGES.
   - C. FEDERAL SPECIFICATIONS (FS)
     - i. FS A-A-2886 - PAINT, TRAFFIC, SOLVENT BASED
     - ii. FS TT-P-1952 - PAINT, TRAFFIC AND AIRFIELD MARKING, WATERBORNE.
7. MATERIALS:
   - A. PROVIDE ALL NEEDED COLORED PAINT SPECIFICALLY FORMULATED FOR USE AS PAVEMENT MARKINGS.
   - B. ALL STRIPING, PAVEMENT MARKINGS, SYMBOLS, INCLUDING ARROWS, CROSSWALKS, ISA SYMBOLS, PARKING STALL STRIPING, ETC. SHALL BE PRE-FORMED THERMOPLASTIC, TRAFFIC RATED PAINT, OR EPOXY PER COUNTY STANDARDS.
   - C. PAINT SHALL BE WATERBORNE OR SOLVENT BORNE AND SHALL COMPLY WITH ALL APPLICABLE LOCAL ORDINANCES AND STATE LAWS ENACTED TO ENSURE COMPLIANCE WITH FEDERAL CLEAN AIR STANDARDS.
   - D. PAINT MATERIALS SHALL CONFORM TO THE RESTRICTIONS OF THE LOCAL AIR POLLUTION CONTROL DISTRICT, IF APPLICABLE.
   - E. WATERBORNE PAINT: PAINTS SHALL CONFORM TO FS TT-P-1952.
   - F. SOLVENT BORNE PAINT: PAINT SHALL CONFORM TO FS A-A-2886 OR AASHTO M248. PAINT SHALL BE NON-BLEEDING, QUICK-DRYING, AND ALKYD PETROLEUM-BASED PAINT SUITABLE FOR TRAFFIC-BEARING SURFACE, AND SHALL BE MIXED IN ACCORDANCE WITH MANUFACTURER'S INSTRUCTIONS BEFORE APPLICATION.
8. COLORS:
   - A. THE MARKING PAINT SHALL BE WHITE, YELLOW OR FEDERAL BLUE CONFORMING TO STANDARD HIGHWAY COLORS.
   - B. PHYSICAL REQUIREMENTS THE PAINT SHALL MEET CALTRANS STANDARD SPECIFICATIONS FOR HIGH SOLIDS WATER-BASED TRAFFIC PAINT.
   - C. THE CONTRACTOR SHALL SUBMIT CERTIFICATION OF THE PAINT PRIOR TO PLACEMENT.
   - D. GLASS BEADS: GLASS BEADS FOR PAVEMENT MARKINGS SHALL CONFORM TO THE SPECIFICATIONS REQUIRED BY THE RESPECTIVE PAINT MANUFACTURER WITH WHICH THE PAINT MATERIAL COMPLIES.
   - E. PIGMENTS:
     - I. WHITE: SUFFICIENT TITANIUM DIOXIDE PIGMENT IS USED TO ENSURE A COLOR SIMILAR TO FEDERAL HIGHWAY WHITE, COLOR NO. 17886, AS PER FEDERAL STANDARD 595.
     - II. YELLOW: SUFFICIENT YELLOW PIGMENT IS USED TO ENSURE A COLOR SIMILAR TO FEDERAL HIGHWAY YELLOW, COLOR NO. 13655, AS PER FEDERAL STANDARD 595. THE YELLOW PIGMENT MUST BE OF AN ORGANIC NATURE ONLY AND CONTAIN NO LEAD CHROMATE.
     - III. BLUE: BLUE PAINT FOR THE SYMBOL OF ACCESSIBILITY AND CURB MARKINGS SHOULD MATCH COLOR NO. 15090 IN THE FEDERAL STANDARD 595A AS SPECIFIED IN SECTION 2-1720 OF THE REGULATIONS (SIMILAR TO ROYAL BLUE).
9. SLIP AND SKID RESISTANCE:
   - A. THE SURFACE, WITH PROPER APPLIED AND EMBEDDED SURFACE BEADS, MUST PROVIDE A MINIMUM RESISTANCE VALUE OF 50 BPN WHEN TESTED ACCORDING TO ASTM E 303.
   - B. THE WET MEASURED COEFFICIENT OF FRICTION SHALL BE NOT LESS THAN 0.6.
10. PREPARATION OF SURFACE:
    - A. ALL SURFACES SHALL BE INSPECTED FOR ADEQUACY TO RECEIVE PAVEMENT MARKINGS AND SHALL BE THOROUGHLY CLEANED PRIOR TO INSTALLATION OF STRIPING OR MARKINGS TO PREPARE THE PAVEMENT SURFACE FOR PROPER ADHESION.
    - B. SWEEP AND CLEAN SURFACE TO ELIMINATE LOOSE MATERIAL AND DUST. ALL DIRT, OIL, GREASE, AND OTHER FOREIGN MATTER SHALL BE REMOVED FROM THE AREAS OF THE PAVEMENT TO BE PAINTED WITH TRAFFIC PAINT.
    - C. TRAFFIC PAINT SHALL NOT BE APPLIED TO PAVEMENTS WHICH ARE EXCESSIVELY DIRTY, DAMP OR COLD. TRAFFIC PAINT SHALL NOT BE APPLIED WHEN THE TEMPERATURE IS LESS THAN 40°F, OR WHEN THE PAVEMENT IS APPRECIABLY WET OR DAMP.
    - D. EXAMINE SURFACES AND ADJACENT AREAS WHERE PRODUCTS WILL BE APPLIED AND VERIFY THAT SURFACE CONDITIONS CONFORM TO PRODUCT MANUFACTURER'S REQUIREMENTS FOR SUBSTRATE CONDITIONS.
    - E. REPARE OR PREPARE SURFACES TO BE PAINTED IN ACCORDANCE WITH PAINT MANUFACTURER'S WRITTEN INSTRUCTIONS. DO NOT PROCEED UNTIL UNSATISFACTORY CONDITIONS HAVE BEEN CORRECTED. BEGINNING OF APPLICATION INDICATES ACCEPTANCE OF SUBSTRATE CONDITIONS.
11. PAINTING APPLICATION:
    - A. ALL MATERIAL SHALL BE PLACED IN A WORKMANLIKE MANNER, WHICH SHALL RESULT IN A CLEARLY DEFINED LINE THAT HAS BEEN ADEQUATELY REFLECTORIZED WITH GLASS BEADS.
    - B. USE ONLY PROPER MASKING, STENCILS AND APPLICATION EQUIPMENT RECOMMENDED FOR THAT PURPOSE BY THE MANUFACTURER OF THE APPROVED PAINT.
    - C. ASPHALT SHALL HAVE HAD APPROPRIATE TIME TO CURE AND ASPHALTIC SEAL SHALL BE IN PLACE AND BE DRY, BEFORE APPLYING AND PAINT.
    - D. AT THE TIME OF APPLYING THE MARKING MATERIAL, THE APPLICATION AREA SHALL BE FREE OF ALL CONTAMINATION, INCLUDING OIL, DIRT, GREASE, CURING COMPOUND AND OTHER MATTER THAT MIGHT ADVERSELY AFFECT ADHESION OR DURABILITY OF THE MARKING MATERIAL.
    - E. THE CONTRACTORS EQUIPMENT SHALL BE CAPABLE OF CLEANING THE PAVEMENT SURFACE OF LOOSE DIRT, SAND, GRAVEL, ETC. BY THE APPLICATION OF COMPRESSED AIR IMMEDIATELY AHEAD OF THE MARKING APPLICATION.
    - F. AREAS WITH HEAVY ACCUMULATION OF CONTAMINANTS, WHICH CANNOT BE REMOVED WITH COMPRESSED AIR, SHALL NOT BE PAINTED UNTIL THE PAVEMENT SURFACE HAS BEEN CLEANED AND SHALL BE PAINTED WITHIN 1 HOUR OF THE CLEANING OPERATION.
    - G. THE CONTRACTOR IS RESPONSIBLE TO DETERMINE WHICH PAVEMENT SURFACES ARE TOO CONTAMINATED FOR PAINTING.
    - H. THE PAINT MARKING APPLICATION SHALL IMMEDIATELY FOLLOW THE PAVEMENT CLEANING. GLASS BEADS SHALL BE APPLIED WITHIN 3 SECONDS AFTER APPLICATION OF THE PAINTED LINE.
    - I. PAVEMENT MARKINGS SHALL ONLY BE APPLIED IN SEASONABLE WEATHER WHEN THE AIR TEMPERATURE IS 50 DEGREES F. OR HIGHER AND RISING, AND A RELATIVE HUMIDITY OF 85% OR LOWER.
    - J. PAVEMENT MARKINGS SHALL NOT BE APPLIED WHEN THE WIND OR OTHER CONDITIONS CAUSE A FILM OF DUST TO BE DEPOSITED ON THE PAVEMENT SURFACE AFTER CLEANING AND BEFORE THE MARKING MATERIAL CAN BE APPLIED, OR IF THE PAVEMENT SURFACE IS TOO WET TO APPLY MARKINGS.
    - K. THE CONTRACTOR IS RESPONSIBLE FOR LAYING OUT ALL MARKINGS IN ACCORDANCE WITH THE APPLICABLE DRAWINGS, DETAILS AND CONSTRUCTION-RELATED ACCESSIBILITY STANDARDS.
    - L. APPLY TWO COATS OF PAINT AT MANUFACTURER'S RECOMMENDED RATE, WITHOUT ADDITION OF THINNER, WITH MAXIMUM OF 100 SQUARE FEET PER GALLON OR AS REQUIRED TO PROVIDE A MINIMUM WET FILM THICKNESS OF 15 MILS AND DRY FILM THICKNESS OF 7-1/2 MILS PER COAT.
    - M. PAINT SHALL BE APPLIED FOR A TOTAL DRY FILM THICKNESS OF 15 MILS. APPLY WITH MECHANICAL EQUIPMENT TO PRODUCE UNIFORM STRAIGHT EDGES. USE STRAIGHTEDGE TO ENSURE UNIFORM, CLEAN, AND STRAIGHT STRIPE. USE TEMPLATES FOR SYMBOLS, LETTERS, AND DIRECTIONAL ARROWS THAT WILL EFFECTIVELY MASK OVERSPRAY. VERIFY TEMPLATES FOR CONFORMANCE WITH APPLICABLE STANDARDS, REGULATIONS AND REQUIREMENTS IN THESES PLANS. INSTALL PAVEMENT MARKINGS ACCORDING TO MANUFACTURER'S RECOMMENDED PROCEDURES FOR THE SPECIFIED MATERIAL.
    - N. PAINT APPLIED IN TWO COATS SHALL BE APPLIED GIVING SUFFICIENT TIME FOR THE FIRST COAT TO COMPLETELY DRY BEFORE APPLYING THE SECOND COAT. EACH COAT SHALL BE APPLIED AT THE MANUFACTURER'S RECOMMENDED RATE. PAINT SHALL NOT BE DILUTED.
12. APPLICATION EQUIPMENT:
    - A. TRAFFIC PAINT SHALL BE APPLIED WITH ATOMIZING SPRAY TYPE STRIPING MACHINE, APPROVED BY THE OWNER. WHERE REQUIRED, THE PAINT STRIPING MACHINE SHALL BE EQUIPPED WITH SEPARATE THERMOSTATICALLY CONTROLLED HEATING DEVICES FOR EACH PAINT AND BEAD POTS. THE EQUIPMENT REQUIRED TO APPLY PAVEMENT MARKING PAINT AND GLASS BEADS SHALL BE A PNEUMATIC SPRAYING MACHINE WITH ATOMIZING NOZZLES CAPABLE OF PROPERLY APPLYING PAVEMENT MARKINGS AS INDICATED IN THE PLANS.
    - B. THE SPRAY MECHANISM SHALL BE OPERATED BY QUICK OPENING AND CLOSING VALVES.
    - C. THE APPLICATOR SHALL APPLY THE MATERIALS AT A RATE SPECIFIED IN AN EVEN AND UNIFORM THICKNESS WITH CLEARLY DEFINED EDGES.
    - D. THE APPLICATOR SHALL HAVE RESERVOIRS OR TANKS EQUIPPED WITH AGITATORS CAPABLE OF KEEPING THE MATERIAL IN A SMOOTH, EVEN MIXTURE.
    - E. TANKS SHALL HAVE SUFFICIENT CAPACITY TO APPLY THE MATERIALS AS SPECIFIED.
    - F. THE APPLICATOR SHALL BE CAPABLE OF RETRACING AND APPLYING MATERIALS TO TRAFFIC MARKINGS IN PLACE.
    - GI. APPLICATION FOR THE MARKING PAINT SHALL BE SUCH AS TO PROVIDE UNIFORM FILM THICKNESS THROUGHOUT THE COVERAGE AREA.
    - H. STRIPE ENDS SHALL BE CLEAN CUT AND SQUARE, WITH A MINIMUM OF MATERIAL BEYOND THE CUTOFF.
    - I. THE MACHINE SHALL BE CAPABLE OF APPLYING PAINT WHEREBY THE LINES AND MARKINGS HAVE CLEAR-CUT EDGES, TRUE AND SMOOTH ALIGNMENTS AND UNIFORM THICKNESS. ALL COMPLETED LINES AND MARKINGS SHALL BE CLEAN AND SHARP AS TO DIMENSIONS. RAGGED ENDS OF SEGMENTS, FOGGINESS ALONG THE SIDES OR OBJECTIONABLE DRIBBLING OF PAINT ALONG THE UNPAINTED PORTIONS OF THE STRIPES WILL NOT BE PERMITTED.
    - J. THE CONTRACTOR SHALL EXERCISE ALL REASONABLE PRECAUTIONS TO PROTECT THE PAINT, AS APPLIED, DURING DRYING TIME AND SHALL REMOVE ALL OBJECTIONABLE TRACKING.
    - K. THE FINISHED PAINT SHALL HAVE AN OPAQUE, WELL PAINTED APPEARANCE WITH NO BLACK OR OTHER DISCOLORATIONS SHOWING THROUGH.
    - L. IN RESTRIPING BROKEN LINES, THE NEWLY PAINTED LINE SHALL EXACTLY COINCIDE WITH THE ORIGINAL PAINTING.
    - M. GLASS BEADS: MARKINGS THAT MUST BE VISIBLE AT NIGHT SHALL BE RETROREFLECTIVE UNLESS AMBIENT ILLUMINATION ASSURES THAT THE MARKINGS ARE ADEQUATELY VISIBLE. APPLICATION MACHINE SHALL BE EQUIPPED WITH A GLASS BEAD DISPENSER ADJUSTED AND SYNCHRONIZED WITH THE PAINT APPLICATOR TO DISTRIBUTE THE REFLECTORIZING SPHERES UNIFORMLY ON THE PAINTED LINE(S) USING AIR PRESSURE. THE BEAD DISPENSER SHALL BE EQUIPPED WITH AN AUTOMATIC CUTOFF CONTROL, SYNCHRONIZED WITH THE CUTOFF OF THE STRIPING MATERIAL. GLASS BEADS SHALL BE EVENLY DISTRIBUTED OVER THE WET PAINT STRIPE AT A RATE OF AT LEAST 6 POUNDS PER GALLON OF PAINT WITHIN 3 SECONDS OF APPLYING THE PAINT. BEADS APPLIED TO MARKINGS MAY BE APPLIED BY HAND IF THE APPLICATION EQUIPMENT IS NOT EQUIPPED FOR AUTOMATIC PRESSURE DISPENSING.
    - N. IF THE APPLICATION RATES ARE NOT WITHIN THE REQUIREMENTS, THE MARKING APPLICATION SHALL BE STOPPED UNTIL CORRECTIONS ARE MADE.
13. INSPECTION:
    - A. AFTER THE PAINT HAS THOROUGHLY DRIED, VISUALLY INSPECT THE ENTIRE APPLICATION AND TOUCH UP AS REQUIRED TO PROVIDE CLEAN, STRAIGHT LINES AND SURFACES THROUGHOUT.
    - B. PAINT SPOTS UPON ADJACENT SURFACES SHALL BE CAREFULLY REMOVED BY APPROVED PROCEDURES THAT WILL NOT DAMAGE THE SURFACES.
14. PARKING LOT STRIPING AND REQUIRED ACCESS AISLES FOR DESIGNATED ACCESSIBLE SPACES SHALL BE REFLECTIVE STRIPING USING REFLECTIVE COLORS AS INDICATED ON APPLICABLE DETAILS TO DELINEATE THE DESIGNATED PARKING STALLS. STANDARD PARKING STALLS AND DIRECTIONAL SYMBOLS SHALL BE REFLECTIVE WHITE PER MUTCD STANDARDS.
15. DETERIORATED OR OBSCURED STRIPING THAT IS NOT MISLEADING OR CONFUSING OR DOES NOT INTERFERE WITH THE ADHESION OF THE NEW STRIPING DOES NOT REQUIRE REMOVAL. EXISTING STRIPING INTERFERING WITH OR CONFLICTING WITH THE NEWLY APPLIED STRIPING SHALL BE REMOVED USING A MOTORIZED ABRASIVE DEVICE. REMOVAL OF EXISTING PAVEMENT MARKINGS IN AREAS NOT SCHEDULED FOR NEW PAVEMENT OR OVERLAY PAVEMENT SHALL BE ACCOMPLISHED BY A METHOD THAT DOES NOT MATERIALLY DAMAGE THE SURFACE OR TEXTURE OF THE EXISTING PAVEMENT TO REMAIN. THE PAVEMENT MARKINGS SHALL BE REMOVED TO THE EXTENT THAT THEY WILL NOT BE VISIBLE UNDER DAY OR NIGHT CONDITIONS. UNDER NO CIRCUMSTANCES SHALL BLACK PAINT BE USED TO COVER EXISTING MARKINGS, OR MISTAKES IN STRIPING. TRAFFIC PAINT REMOVAL. TRAFFIC STRIPES AND OTHER PAVEMENT MARKINGS THAT ARE NOT TO REMAIN AND WILL NOT BE REMOVED WITH THE REMOVAL OF PAVEMENT OR OVERLAID WITH NEW PAVEMENT SHALL BE REMOVED BY SAND BLASTING OR USING A MOTORIZED ABRASIVE DEVICE ONLY. UNDER NO CIRCUMSTANCES ARE TRAFFIC LINES TO BE OBLITERATED WITH BLACK TRAFFIC PAINT.
16. WHENEVER REMOVAL OPERATIONS ARE PERFORMED, THE WORK SHALL BE CONDUCTED IN SUCH A MANNER THAT THE FINISHED PAVEMENT SURFACE IS NOT DAMAGED OR LEFT IN A PATTERN THAT IS MISLEADING OR CONFUSING. WHEN THESE OPERATIONS ARE COMPLETED THE PAVEMENT SURFACE SHALL BE BLOWN OFF WITH COMPRESSED AIR TO REMOVE RESIDUE AND DEBRIS RESULTING FROM THE CLEANING WORK. COORDINATE METHOD OF MARKING REMOVAL WITH AUTHORITY HAVING JURISDICTION IF MARKINGS ARE IN A PUBLIC RIGHT-OF-WAY.
17. CONSTRUCTION IRREGULARITIES THE CONTRACTOR SHALL BE RESPONSIBLE FOR ANY AND ALL ADMINISTRATIVE COSTS AND PROFESSIONAL FEES INCURRED BY OWNER FOR ADDITIONAL ARCHITECTURAL AND ARCHITECT SERVICES ASSOCIATED WITH THE CORRECTION OF COMPLETED WORK WHICH IS NOT IN ACCORDANCE WITH THE CONTRACT DOCUMENTS.

## DEFECTIVE WORK

1. SHOULD ANY PORTION OF THE WORK DONE OR ANY MATERIALS, ARTICLES OR EQUIPMENT DELIVERED FAIL TO COMPLY WITH THE REQUIREMENTS OF THE CONTRACT, SUCH WORK, MATERIALS, ARTICLES, OR EQUIPMENT SHALL BE REJECTED IN WRITING AND SHALL IMMEDIATELY BE MADE SATISFACTORY TO THE OWNER, BY THE CONTRACTOR, AT NO ADDITIONAL EXPENSE TO THE OWNER. ANY MATERIALS, ARTICLES, OR EQUIPMENT THAT ARE REJECTED SHALL IMMEDIATELY BE REMOVED FROM THE PREMISES AT THE EXPENSE OF THE CONTRACTOR.
2. REPAIRS
   - A. REPAIR ALL BUILDING COMPONENTS DAMAGED AS A RESULT OF CONSTRUCTION OPERATIONS.
   - B. REPAIR DAMAGE TO ANY NEW OR EXISTING SITE IMPROVEMENTS
   - C. REPAIR ALL SURFACES WHERE TEMPORARY ATTACHMENTS OCCURRED, SUCH AS SHORING OR TEMPORARY BARRICADES.
   - D. REPAIRS SHALL BE APPROPRIATE TO THE MATERIAL DAMAGED AND THE EXTENT OF THE DAMAGE.
   - E. THE OWN AND ARCHITECT RETAIN THE RIGHT TO REJECT ANY REPAIR METHOD NOT ADEQUATE TO RETURN THE SUBJECT MATERIAL OR SURFACE TO ITS ORIGINAL CONDITION.
   - F. REPAIRS SHALL RESULT IN CONDITIONS COMPLYING WITH ALL APPLICABLE REFERENCED REGULATIONS AND INDUSTRY STANDARDS.

## SUBSTANTIAL COMPLETION

1. CONTRACTOR SHALL BE RESPONSIBLE TO ACHIEVE SUBSTANTIAL COMPLETION PER THE TERMS OF THE CONTRACT REGARDING TIME. SUBSTANTIAL COMPLETION SHALL BE CONSIDERED BASED ON BENEFICIAL OCCUPANCY BY THE DISTRICT AND SHALL REQUIRE THAT THE OWNER AND ITS TENANTS CAN OCCUPY AND FULLY UTILIZE THE FACILITIES FOR THEIR INTENDED PURPOSE, FREE OF DEFECT. BENEFICIAL OCCUPANCY MEANS THAT ALL ITEMS REQUIRED BY THE CONTRACT DOCUMENTS ARE COMPLETED. OWNER AND OWNER'S TENANTS MAY OCCUPY THE SPACE BUT THIS DOES NOT NECESSARILY DENOTE "BENEFICIAL" OCCUPANCY.
2. WHEN CONTRACTOR CONSIDERS THE WORK TO BE SUBSTANTIALLY COMPLETE, HE SHALL NOTIFY THE OWNER IN WRITING. C. SHOULD ARCHITECT DETERMINE THE WORK IS NOT SUBSTANTIALLY COMPLETE, CONTRACTOR WILL BE PROMPTLY NOTIFIED IN WRITING, GIVING REASONS. CONTRACTOR SHALL PAY FOR TIME AND DIRECT EXPENSES OF OWNER'S REPRESENTATIVE AND ARCHITECT WHERE MORE THAN ONE SUBSTANTIAL COMPLETION INSPECTION IS REQUIRED.

## FINAL COMPLETION

1. FINAL COMPLETION SHALL REPRESENT THE TERMINATION OF THE CONTRACT AND CESSATION OF ACTIVE WORK UNDER THE CONTRACT, EXCEPT FOR COMMISSIONING, WARRANTY AND CLAIMS WORK THAT MAY OCCUR.
2. FINAL COMPLETION SHALL OCCUR ONLY AFTER:
   - A. WORK HAS BEEN INSPECTED AND ACCEPTED BY OWNER FOR COMPLIANCE WITH CONTRACT DOCUMENTS.
   - B. WORK HAS BEEN COMPLETED IN ACCORDANCE WITH CONTRACT DOCUMENTS AND DEFICIENCIES LISTED WITH CERTIFICATE OF SUBSTANTIAL COMPLETION HAVE BEEN CORRECTED SATISFACTORY TO THE OWNER.
3. ALL REPAIRS, IF ANY HAVE BEEN COMPLETED SATISFACTORY TO OWNER.
4. ALL WORK IS COMPLETE AND READY FOR FINAL INSPECTION.
5. REQUIRED DOCUMENTS HAVE BEEN SUBMITTED, INCLUDING THOSE REQUIRED BY SURETY, GOVERNING AGENCIES AND ANY OTHER PROVISION OF THE CONTRACT DOCUMENTS.
6. ALL LIEN RELEASES HAVE BEEN PROPERLY EXECUTED AND DELIVERED TO OWNER.
7. FINAL PAYMENT WILL NOT BE MADE TO THE CONTRACTOR UNTIL ALL CLOSE OUT DOCUMENTS HAVE BEEN RECEIVED AND APPROVED BY THE OWNER. THESE ITEMS ARE LISTED BELOW:
   - A. PUNCH LIST ITEMS SATISFACTORILY COMPLETED.
   - B. LETTER OF GUARANTEE (FORMAT PROVIDED BY OWNER).
   - C. AFFIDAVIT OF COMPLETION/CONSENT OF SURETY.
   - D. EXECUTED LIEN RELEASE FORMS FROM ALL MATERIAL SUPPLIERS, CONTRACTORS AND SUBCONTRACTORS PROVIDED TO THEN OWNER.
8. THE PROJECT IS NOT COMPLETE UNTIL PROPERLY CLOSED OUT. THIS SECTION IS CRITICAL FOR AN UNDERSTANDING OF THE TURNOVER PROCEDURE FROM CONTRACTOR TO OWNER. SUBSTANTIAL COMPLETION DOES NOT OCCUR UNTIL THE OWNER CAN TAKE "BENEFICIAL OCCUPANCY". BENEFICIAL OCCUPANCY MEANS THAT ALL OF THE THINGS THAT THE OWNER IS PAYING FOR HAVE BEEN SATISFACTORILY COMPLETED. OCCUPYING THE SITE OR BUILDING DOES NOT IMPLY "BENEFICIAL OCCUPANCY" OR "SUBSTANTIAL COMPLETION".

## SITE CLEANUP

1. THE CONTRACTOR SHALL REMOVE ALL EQUIPMENT, DEBRIS AND DEBRIS BOXES EXCESS MATERIALS, TEMPORARY FACILITIES, BARRICADES, ETC. AND SHALL BROOM CLEAN ALL SURFACES WITHIN THE WORK SCOPE AREA AND ANY ADJACENT AREAS THAT MAY HAVE BEEN AFFECTED BY CONSTRUCTION ACTIVITIES.
2. CONTRACTOR SHALL, AT NO ADDITIONAL COST TO THE OWNER, TIMELY REPAIR AND RESTORE TO AT LEAST AS GOOD A CONDITION AS PRIOR TO COMMENCING CONSTRUCTION ON THIS PROJECT, ANY ELEMENTS, FACILITIES, SYSTEMS AND APPURTENANCES TO REMAIN THAT HAVE BEEN DAMAGED OR DESTROYED BY CONTRACTOR'S ACTIVITIES.
3. THE OWNER'S ACCEPTANCE OF THE WORK AND DETERMINATION OF SATISFACTORY CLEANUP AND RESTORATION OF DAMAGED FACILITIES SHALL BE FINAL.
4. CONTRACTOR SHALL ENSURE THAT BEST MANAGEMENT PRACTICES AND STORM WATER FCILITIES ARE CLEAN, CLEAR, UNOBSTRUCTED AND OPERATIONAL AND THAT STORM WATER AND EROSION CONTROLS ARE IN PLACE AND FUNCTIONING PROPERLY. REFOR TO SHEET A0.9 FOR ADDITIONAL INFORMATION.

## ACCEPTANCE

1. PAINT AND PAVEMENT MARKINGS PAINTED MARKINGS THAT ARE DISCOLORED, DAMAGED BY WIND-BLOWN DIRT, OR ARE INEFFECTIVE AT NIGHT WILL BE REJECTED. UNSIGHTLY MARKINGS WITH UNEVEN EDGE LINES, OVER SPRAY, POOR LONGITUDINAL ALIGNMENT, UNEVEN ADHERENCE, MISSING PORTIONS OR OTHER OBJECTIONABLE FAULTS WILL BE REJECTED. THE CONTRACTOR SHALL REPAIR OR REPLACE ALL REJECTED MARKINGS AT ITS OWN EXPENSE. REMOVAL OF UNACCEPTABLE WORK SHALL BE ACCOMPLISHED WITH SUITABLE BLASTING OR GRINDING EQUIPMENT UNLESS OTHER MEANS ARE AUTHORIZED BY THE ARCHITECT.
2. REMOVAL: THE CONTRACTOR MUST REMOVE ALL TEMPORARY EQUIPMENT AND MATERIALS UPON COMPLETION OF CONSTRUCTION, REPAIR ALL DAMAGE CAUSED BY THE INSTALLATION, AND RESTORE THE AREA TO SATISFACTORY CONDITION.
3. PAVEMENT PAVEMENT IN VEHICULAR AREAS SHALL BE FULLY CONSOLIDATED, FIRM, WITHOUT ABRUPT VERTICAL CHANGES IN LEVEL EXCEEDING 1/4", SHALL BE UNIFORM IN SURFACE CHARACTERISTICS, FINISH, AND APPEARANCE, SHALL MEET MINIMUM SECTION PROPERTIES AND ADHESION OVER PROPERLY COMPACTED BASE, SHALL CONFORM FLUSH TO ADJACENT PAVED VEHICULAR AREAS IN THE SAME PLANE AND SHALL PROVIDE FOR ADEQUATE SLOPE TO CONVEY STORM WATER ALONG FLOW LINES TOWARDS EXISTING STORM WATER FACILITIES. PONDING, STANDING WATER ("BIRD BATHS") ARE NOT ALLOWED.
4. PAVEMENT IN PEDESTRIAN AND IN PEDESTRIAN/VEHICULAR AREAS (CROSS WALKS, ACCESSIBLE PARKING STALLS AND PASSENGER LOADING AISLES SHALL BE FULLY CONSOLIDATED, FIRM, WITHOUT ABRUPT VERTICAL CHANGES IN LEVEL EXCEEDING 1/4", SHALL BE UNIFORM IN SURFACE CHARACTERISTICS, FINISH, AND APPEARANCE, SHALL MEET MINIMUM SECTION PROPERTIES AND ADHESION OVER PROPERLY COMPACTED BASE, SHALL CONFORM FLUSH TO IMMEDIATELY ADJACENT PAVED AREAS IN THE SAME PLANE (EXCEPT WHERE SEPARATED BY CURBS) AND SHALL PROVIDE FOR ADEQUATE SLOPE TO CONVEY STORM WATER ALONG FLOW LINES TOWARDS EXISTING STORM WATER FACILITIES. PONDING, STANDING WATER ("BIRD BATHS") ARE NOT ALLOWED. ADDITIONALLY, SLOPES SHALL CONFORM TO THE REQUIREMENTS FOR ACCESSIBLE PATHS OF TRAVEL AND SLOPES SHALL NOT EXCEED MAXIMUM PERMISSIBLE SLOPES. ALL PEDESTRIAN PATHS OF TRAVEL AT WALKS, SIDEWALKS, CROSS WALKS, DESIGNATED ACCESSIBLE PARKING AREAS, RAMPS AND CURB RAMPS SHALL BE FIRM, STABLE, AND SLIP RESISTANT WITHOUT ABRUPT CHANGES IN LEVEL EXCEEDING 1/4".
5. GRATES, UTILITY BOXES AND COVERS, ETC. SHALL BE SET FLUSH TO ADJACENT FINISH, TRUE TO PLANE, ORIENTED FOR A NEAT AND ORDERLY APPEARANCE AND ALIGNED PROPERLY.
6. SIGNS SUBMIT SIGN CUT SHEETS FOR APPROVAL PRIOR TO PROCUREMENT. SIGNS SHALL BE PROPERLY MOUNTED IN THE LOCATIONS INDICATED ON THE PLANS. SHALL CONFORM IN EVERY REGARD TO THE MOST STRINGENT REGULATIONS OF BOTH STATE AND FEDERAL REQUIREMENTS.

## GUARANTEE

1. UNLESS OTHERWISE NOTED IN THE OWNER'S STANDARD CONDITIONS OF THE CONTRACT CONTRACTOR SHALL GUARANTEE ALL WORK, EQUIPMENT AND MATERIALS OF THIS CONTRACT TO BE AND REMAIN FREE OF DEFECTS IN WORKMANSHIP AND/OR MATERIALS FURNISHED AND INSTALLED FOR TWO (2) YEARS FROM DATE OF ACCEPTANCE. SHOULD ANY TROUBLE DEVELOP DURING THIS GUARANTEED PERIOD DUE TO DEFECTIVE MATERIALS OR FAULTY WORKMANSHIP, THE CONTRACTOR SHALL FURNISH ALL LABOR, MATERIALS, AND TRANSPORTATION REQUIRED TO CORRECT THE TROUBLE WITHOUT COST TO THE OWNER. ANY DEFECTIVE MATERIALS OR INFERIOR WORKMANSHIP NOTICED DURING GUARANTEE PERIOD SHALL BE CORRECTED IMMEDIATELY TO THE ENTIRE SATISFACTION OF THE OWNER OR HIS DESIGNEE.
2. WARRANT AND GUARANTEE PERIOD COMMENCES ON THE DATE OF OWNER'S ACCEPTANCE OF THE COMPLETED WORK FREE FROM ALL DEFECTS DUE TO FAULTY MATERIALS OR WORKMANSHIP. THE CONTRACTOR SHALL PROMPTLY MAKE SUCH CORRECTIONS, AS MAY BE NECESSARY INCLUDING THE REPAIRS OF ANY DAMAGE TO OTHER PARTS OF THE SYSTEM RESULTING FROM SUCH DEFECTS. THE OWNER WILL GIVE NOTICE OF OBSERVED DEFECTS WITH REASONABLE PROMPTNESS. A FAILURE BY OWNER OR OWNER'S AGENTS OR ASSIGNS TO OBSERVE DEFECTS, EVEN IF OBSERVABLE, DOES NOT ALLEVIATE OR OBVIATE THE CONTRACTOR OR MATERIAL SUPPLIERS FROM RESPONSIBILITY TO REPAIR OR CORRECT DEFICIENCIES. IN THE EVENT THAT THE CONTRACTOR SHOULD FAIL TO MAKE SUCH REPAIRS, ADJUSTMENTS OR OTHER WORK THAT MAY BE MADE NECESSARY BY SUCH DEFECTS, THE OWNER MAY DO SO AND CHARGE THE CONTRACTOR THE COST THEREBY INCURRED.

Craig D. Williams
Architecture
Interiors
Planning
Project
Management

295 Neva Street
Sebastopol, CA
95472
(707) 400-8325 (m)
(707) 823-2724 (o)
ArchWiseDesign@Gmail.com

Drawings, specifications and all ideas, designs, and arrangements indicated on these drawings and specifications are and shall remain the property of Craig Williams, architect and are intended to be used in connection with this specific project only. No part shall be copied or disclosed to others or otherwise be used in connection with any other work or project other than the specified work for which they have been prepared without the written consent of the architect. There shall be no changes or deviations from these drawings or the accompanying specifications without the written consent of the architect.

THESE DRAWINGS ARE INSTRUMENTS OF SERVICE AND ARE THE SOLE PROPERTY OF CRAIG D. WILLIAMS, ARCHITECT, COPYRIGHT © 2014-2015

Visual contact with these plans and specifications shall constitute conclusive evidence of acceptance of these restrictions.

CRAIG D. WILLIAMS
NOT FOR CONSTRUCTION UNLESS SIGNED BY THE ARCHITECT AND APPROVED BY JURISDICTIONS HAVING AUTHORITY

LICENSED ARCHITECT
CRAIG DOUGLAS WILLIAMS
No. C026642
REN. 10-31-17
STATE OF CALIFORNIA

08-21-2016

ACCESSIBILITY UPGRADES
IVES POOL AND POOL HOUSE
7400 WILLOW STREET
SEBASTOPOL, CA

PROJECT NUMBER:
082515.00
DATE:
28 JULY, 2016
DRAWN BY:
CW
CHECKED BY:
CW
REVISIONS:

PROJECT NOTES
T0.6

© THESE DRAWINGS ARE INSTRUMENTS OF SERVICE AND ARE THE SOLE PROPERTY OF CRAIG WILLIAMS ARCHITECT. ANY USE WITHOUT WRITTEN CONSENT IS PROHIBITED.

## GENERAL NOTES

STATE OF CALIFORNIA
### ENVELOPE COMPONENT APPROACH
CEC-NRCC-ENV-01-E (Revised 06/15) — CALIFORNIA ENERGY COMMISSION

| CERTIFICATE OF COMPLIANCE | NRCC-ENV-01-E |
|---|---|
| Envelope Component Approach | (Page 1 of 4) |
| Project Name: Ives Pool House Addition | Date Prepared: 7/27/2016 |

**A. GENERAL INFORMATION**

| | | | | | |
|---|---|---|---|---|---|
| 1 | Project Location: | 7400 Willow Street | 6 | Compliance Method: | ☒ Component<br>☐ Unconditioned (file Affidavit) |
| 2 | CA City and Zip Code: | Sebastopol, | 7 | Building Front Orientation (deg or cardinal): | 180 deg |
| 3 | Climate Zone: | 2 | 8 | Phase of Construction | ☐ New Construction<br>☒ Addition<br>☐ Alteration |
| 4 | Total Conditioned Floor Area: | 224 | 9 | Building Occupancy | ☒ Nonresidential<br>☐ High-Rise Residential<br>☐ Hotel/Motel Guest Room |
| 5 | Building Type | ☐ Schools (Public School) ☐ Relocatable Public School Bldg. ☒ Conditioned Spaces ☐ Unconditioned Spaces<br>☐ Skylight Area for Large Enclosed Space > 5000 ft² (If checked include the NRCC-ENV-04-E with submittal) | | | |

**B. ENVELOPE DETAILS – FRAMED**

| 1 | 2 | 3 | 4 | 5 | 6 | 7 | 8 | 9 | 10 | 11 |
|---|---|---|---|---|---|---|---|---|---|---|
| Tag/ID | Assembly Type | Frame Material | Frame Depth | Frame Spacing | Appendix JA4 Reference | Cavity R-value | Continuous Insulation R-value | Proposed U-Factor | Required U-Factor from Tables, B, C, D | Field Inspection Comments |
| 1 | Roof | Wood | 2x10 @ 16 | | 4.2.2-A16 | 30 | 0.0 | 0.036 | 0.039 | R-30 Roof w/TPO |
| | | | | | | | | | | |
| | | | | | | | | | | |

**C. ENVELOPE DETAILS – NON-FRAMED**

| 1 | 2 | 3 | 4 | 5 | 6 | 7 | 8 | 9 | 10 |
|---|---|---|---|---|---|---|---|---|---|
| Tag/ID | Assembly Type | Assembly Materials | Thickness (inches) | Interior or Core Insulation R-value | Continuous Insulation R-value | Appendix JA4 Reference | Proposed U-Factor | Required U-Factor from Tables, B, C, D | Field Inspection Comments |
| | | | | | | | | | |
| | | | | | | | | | |



STATE OF CALIFORNIA
### ENVELOPE COMPONENT APPROACH
CEC-NRCC-ENV-01-E (Revised 06/15) — CALIFORNIA ENERGY COMMISSION

| CERTIFICATE OF COMPLIANCE | NRCC-ENV-01-E |
|---|---|
| Envelope Component Approach | (Page 2 of 4) |
| Project Name: | Date Prepared: |

**D. ENVELOPE DETAILS – MASS**

| 1 | 2 | 3 | 4 | 5 | 6 | 7 | 8 | 9 | 10 | 11 |
|---|---|---|---|---|---|---|---|---|---|---|
| Tag/ID | Mass Type | Density (lb/ft³) | Mass Thickness (inches) | Furring Strip Thickness (inches) | Interior Insulation R-value | Exterior Insulation R-value | Appendix JA4 Reference | Proposed Insulation U-factor | Required U-Factor from Tables, B, C, D | Field Inspection Comments |
| | | | | | | | | | | |
| | | | | | | | | | | |

**E. ROOFING PRODUCTS (COOL ROOF)**

| 1 | 2 | 3 | 4 | 5 | | 6 | 7 | 8 | 9 | 10 | 11 |
|---|---|---|---|---|---|---|---|---|---|---|---|
| | | | | Proposed | | | | Minimum Required | | | |
| Mass Roof 25 lb/ft2 or greater | Roof Pitch | CRRC Product ID Number | Product Type | Aged Solar Reflectance | | Thermal Emittance | SRI² (Optional) | Aged Solar Reflectance | Thermal Emittance | SRI (optional) | Comments |
| ☐ | 1 / 12 | | | ☐¹ | 0.63 | 0.75 | | 0.63 | 0.75 | | R-30 Roof w/TPO |
| ☐ | | | | ☐¹ | | | | | | | |
| ☐ | | | | ☐¹ | | | | | | | |

☐ An aged solar reflectance less than 0.63 is allowed provided the maximum roof / ceiling U factor in TABLE 140.3 is not exceeded

☐ High-rise residential buildings and Hotels and Motels with low sloped roofs in Climate Zones 1 through 5, 12 and 16 are exempted from aged Solar Reflectance and emittance requirements.

☐ High-rise residential buildings and Hotels and Motels with steep-sloped roofs in Climate Zones 1 and 16 are exempt from aged Solar Reflectance and emittance requirements.

☐ The roof area covered by building integrated photovoltaic panels and building integrated solar thermal panels are exempt from aged Solar Reflectance and emittance requirements

To apply Liquid Field Applied Coatings, the coating must be applied across the entire roof surface and meet the dry mil thickness or coverage recommended by the coatings manufacturer and meet minimum performance requirements listed in §110.8(i)4. Select the applicable coating:

☐ Aluminum-Pigmented Asphalt Roof Coating | ☐ Cement-Based Roof Coating | ☐ Other ________

**NOTES:**
1. *Check the box if the aged Solar reflectance was not available in the Cool Roof Rating Council's Rated Product Directory, Then use the equation in Section 110.8(i)2 where the initial Reflectance value from the same directory and use the equation $(0.2+\beta(\rho_{initial}-0.2))$ to obtain a calculated aged value. Where ρ is the Initial Solar Reflectance and B is either set to 0.65 for Field-Applied Coatings or it is set to 0.70 for all other roofing products other than Field-Applied Coating.*
2. *Calculate the SRI Value by using the SRI Worksheet at (TBD) and enter the resulting value in the SRI Column above and attach a copy for the SRI Worksheet NRCC-ENV-03-E to the to this form.*



STATE OF CALIFORNIA
### ENVELOPE COMPONENT APPROACH
CEC-NRCC-ENV-01-E (Revised 06/15) — CALIFORNIA ENERGY COMMISSION

| CERTIFICATE OF COMPLIANCE | NRCC-ENV-01-E |
|---|---|
| Envelope Component Approach | (Page 3 of 4) |
| Project Name: | Date Prepared: |

**F. AIR BARRIER**

| 1 | 2 | 3 | 4 | 5 |
|---|---|---|---|---|
| Name | Air Barrier Material Type | Air Barrier Assembly Type | Whole Building Air Leakage Testing | Comments |
| ENV-MM | | | | |
| | | | | |

**G. FENESTRATION PROPOSED AREAS AND EFFICIENCIES**

| 1 | 2 | 3 | 4 | 5 | 6 | 7 | 8 | 9 | 10 | 11 | 12 |
|---|---|---|---|---|---|---|---|---|---|---|---|
| Tag/ID | Fenestration Type | Surface Area | Orientation N, S, W, E or Roof | # of Panes | Max U-Factor | Overhang | Max (R) SHGC | Min VT | Label | Conditions Status | Comments |
| 1 | Slnd fixed .36/.25/.42 | 36 | E | 2 | 0.36 | No | 0.25 | 0.42 | NFRC | New | |
| | | | | | | | | | | | |
| | | | | | | | | | | | |
| | | | | | | | | | | | |
| | | | | | | | | | | | |
| | | | | | | | | | | | |
| | | | | | | | | | | | |
| | | | | | | | | | | | |
| | | | | | | | | | | | |

**H. ENVELOPE MANDATORY MEASURES**

Indicate location on building plans of Mandatory Envelope Measures Note Block: ________

**INSTRUCTIONS TO APPLICANT ENVELOPE COMPLIANCE & WORKSHEETS (check box if worksheet are included)**

*For detailed instructions on the use of this and all Energy Efficiency Standards compliance forms, please refer to the Nonresidential Compliance Manual.*

| | | |
|---|---|---|
| ☐ | NRCC-ENV-01-E | Certificate of Compliance. Required on plans for all submittals. |
| ☐ | NRCC-ENV-04-E | Use when minimum skylight requirements for large enclosed spaces are required in climate zones 2 through 15. Optional on plans. |



STATE OF CALIFORNIA
### ENVELOPE COMPONENT APPROACH
CEC-NRCC-ENV-01-E (Revised 06/15) — CALIFORNIA ENERGY COMMISSION

| CERTIFICATE OF COMPLIANCE | NRCC-ENV-01-E |
|---|---|
| Envelope Component Approach | (Page 4 of 4) |
| Project Name: Ives Pool House Addition | Date Prepared: 7/27/2016 |

**DOCUMENTATION AUTHOR'S DECLARATION STATEMENT**

1. I certify that this Certificate of Compliance documentation is accurate and complete.

| | |
|---|---|
| Documentation Author Name: Sarah Pernula | Documentation Author Signature: Sarah Pernula |
| Company: SOLDATA Energy Consulting | Signature Date: 7/27/2016 |
| Address: 2235 Challenger Way, Suite 103 | CEA/HERS Certification Identification (if applicable): |
| City/State/Zip: Santa Rosa, CA 95407 | Phone: 707.545.4440 |

**RESPONSIBLE PERSON'S DECLARATION STATEMENT**

I certify the following under penalty of perjury, under the laws of the State of California:
1. The information provided on this Certificate of Compliance is true and correct.
2. I am eligible under Division 3 of the Business and Professions Code to accept responsibility for the building design or system design identified on this Certificate of Compliance (responsible designer).
3. The energy features and performance specifications, materials, components, and manufactured devices for the building design or system design identified on this Certificate of Compliance conform to the requirements of Title 24, Part 1 and Part 6 of the California Code of Regulations.
4. The building design features or system design features identified on this Certificate of Compliance are consistent with the information provided on other applicable compliance documents, worksheets, calculations, plans and specifications submitted to the enforcement agency for approval with this building permit application.
5. I will ensure that a completed signed copy of this Certificate of Compliance shall be made available with the building permit(s) issued for the building, and made available to the enforcement agency for all applicable inspections. I understand that a completed signed copy of this Certificate of Compliance is required to be included with the documentation the builder provides to the building owner at occupancy.

| | |
|---|---|
| Responsible Designer Name: Craig D. Williams | Responsible Designer Signature: |
| Company: Craig D. Williams Architecture | Date Signed: 26 JULY 2016 |
| Address: 295 Nova Street | License: C26642 |
| City/State/Zip: Sebastopol, CA 95472 | Phone: 707.823.2724 |



Craig D. Williams
Architecture
Interiors
Planning
Project
Management

295 Neva Street
Sebastopol, CA
95472

(707) 823-2724
CASpAccess@gmail.com

COPYRIGHT AND CONDITIONAL RIGHT OF USE
Drawings, specifications and all ideas, designs, and arrangements indicated on these drawings and specifications are and shall remain the property of Craig Williams, architect and are intended to be used in connection with this specific project only. No part shall be copied or disclosed to others or otherwise be used in connection with any other work or project other than the specified scope of work for which they have been prepared without the prior written consent of the architect. There shall be no changes or deviations from these drawings or the accompanying specifications without the prior written consent of the Architect - the design professional in responsible charge.

THESE DRAWINGS ARE INSTRUMENTS OF SERVICE THE PROPERTY OF CRAIG D. WILLIAMS, ARCHITECT, COPYRIGHT © 2015-2016

Visual contact with these plans and specifications shall constitute conclusive evidence of acceptance of these restrictions.

CRAIG D. WILLIAMS

LICENSED ARCHITECT — CRAIG DOUGLAS WILLIAMS — No. C026642 — REN. 10-31-17 — STATE OF CALIFORNIA

08.21.2016

NOT FOR CONSTRUCTION UNLESS SIGNED BY THE ARCHITECT AND STAMPED APPROVED BY THE AUTHORITY HAVING JURISDICTION

AGENCY APPROVALS

ACCESSIBILITY UPGRADES
IVES POOL
AND POOL HOUSE
7400 WILLOW STREET
SEBASTOPOL, CA

PROJECT NUMBER:
082515.00
DATE:
26 JULY, 2016
DRAWN BY:
CW
CHECKED BY:
CW
REVISIONS:

TITLE 24 ENERGY
MANDATORY
MEASURES

**T24-1.0**

© THESE DRAWINGS ARE INSTRUMENTS OF SERVICE AND ARE THE SOLE PROPERTY OF CRAIG WILLIAMS ARCHITECT. ANY USE WITHOUT WRITTEN CONSENT IS PROHIBITED.

Aug 23, 2016 - 10:04am cwilliams C:\Documents and Settings\cwilliams\Desktop\CLIENTS\SEBASTOPOL CITY\IVES\CD-T24-1.0.DWG

## GENERAL NOTES

STATE OF CALIFORNIA
# INDOOR LIGHTING
CEC-NRCC-LTI-01-E (Revised 10/15)
CALIFORNIA ENERGY COMMISSION

| | |
|---|---|
| CERTIFICATE OF COMPLIANCE | NRCC-LTI-01-E |
| Indoor Lighting | (Page 1 of 6) |
| Project Name: Ives Pool House Addition | Date Prepared: 7/27/2016 |

**A. General Information**

| | | | | |
|---|---|---|---|---|
| Climate Zone: 2 | Conditioned Floor Area : 224<br>Unconditioned Floor Area : 0 | | | |
| Building Type: | ☐ Nonresidential | ☐ High-Rise Residential | ☐ Hotel/Motel | |
| ☐ Schools | ☐ Relocatable Public Schools | ☐ Conditioned Spaces | ☐ Unconditioned Spaces | |
| Phase of Construction: | ☐ New Construction | ☐ Addition | ☐ Alteration | |
| Method of Compliance: | ☐ Complete Building | ☐ Area Category | ☐ Tailored | |
| Project Address: 7400 Willow Street | | | | |

**B. Lighting Compliance Documents (select yes for each document included)**

*For detailed instructions on the use of this and all Energy Efficiency Standards compliance documents, refer to the Nonresidential Manual published by the California Energy Commission.*

| YES | NO | FORM | TITLE |
|---|---|---|---|
| ✓ | | NRCC-LTI-01-E | Certificate of Compliance. All Pages required on plans for all submittals. |
| ✓ | | NRCC-LTI-02-E | Lighting Controls, Certificate of Compliance, and PAF Calculation. All Pages required on plans for all submittals. |
| ✓ | | NRCC-LTI-03-E | Indoor Lighting Power Allowance |
| | ✓ | NRCC-LTI-04-E | Tailored Method Worksheets |
| | ✓ | NRCC-LTI-05-E | Line Voltage Track Lighting Worksheets |



STATE OF CALIFORNIA
# INDOOR LIGHTING
CEC-NRCC-LTI-01-E (Revised 10/15)
CALIFORNIA ENERGY COMMISSION

| | |
|---|---|
| CERTIFICATE OF COMPLIANCE | NRCC-LTI-01-E |
| Indoor Lighting | (Page 2 of 6) |
| Project Name: Ives Pool House Addition | Date Prepared: 7/27/2016 |

**C. Summary of Allowed Lighting Power**

Conditioned and Unconditioned space lighting must not be combined for compliance.

| | Indoor Lighting Power for Conditioned Spaces | | Watts | Indoor Lighting Power for Unconditioned Spaces | | Watts |
|---|---|---|---|---|---|---|
| 1. | Installed Lighting NRCC-LTI-01-E, page 4 | + | 132 | Installed Lighting NRCC-LTI-03-E, page 4 | + | 0 |
| 2. | PORTABLE ONLY FOR OFFICES NRCC-LTI-01-E, page 3 | + | | | | |
| 3. | Minus Lighting Control Credits NRCC-LTI-02-E, page 2 | - | 0 | Minus Lighting Control Credits NRCC-LTI-02-E, page 2 | - | 0 |
| 4. | Adjusted Installed Lighting Power (row 1 plus row 2 minus row 3) | = | 132 | Adjusted Installed Lighting Power (row 1 minus row 3) | = | 0 |
| 5. | Compliance ONLY if Installed ≤ Allowed | | | Compliance ONLY if Installed ≤ Allowed | | |
| 6. | Allowed Lighting Power Conditioned NRCC-LTI-03-E, page 3 | | 134 | Allowed Lighting Power Unconditioned NRCC-LTI-03-E, page 3 | | 0 |

**D. Declaration of Required Installation Certificates**

Declare by selecting yes for all Installation Certificates that will be submitted. (Retain copies and verify forms are completed and signed.)

| YES | NO | Form/Title | |
|---|---|---|---|
| ✓ | | NRCI-LTI-01-E - Must be submitted for all buildings | ☐ Field Inspector |
| | ✓ | NRCI-LTI-02-E - Must be submitted for a lighting control system, or for an Energy Management Control System (EMCS), to be recognized for compliance. | ☐ Field Inspector |
| | ✓ | NRCI-LTI-03-E - Must be submitted for a line-voltage track lighting integral current limiter, or for a supplementary overcurrent protection panel used to energize any line-voltage track lighting, to be recognized for compliance. | ☐ Field Inspector |
| | ✓ | NRCI-LTI-04-E - Must be submitted for two interlocked systems serving an auditorium, a convention center, a conference room, a multipurpose room, or a theater to be recognized for compliance. | ☐ Field Inspector |
| | ✓ | NRCI-LTI-05-E - Must be submitted for a Power Adjustment Factor (PAF) to be recognized for compliance. | ☐ Field Inspector |
| | ✓ | NRCI-LTI-06-E - Must be submitted for additional wattage installed in a video conferencing studio to be recognized for compliance. | ☐ Field Inspector |



STATE OF CALIFORNIA
# INDOOR LIGHTING
CEC-NRCC-LTI-01-E (Revised 10/15)
CALIFORNIA ENERGY COMMISSION

| | |
|---|---|
| CERTIFICATE OF COMPLIANCE | NRCC-LTI-01-E |
| Indoor Lighting | (Page 3 of 6) |
| Project Name: Ives Pool House Addition | Date Prepared: 7/27/2016 |

**E. Declaration of Required Certificates of Acceptance**

Declare by checking all of the Certificates of Acceptance that will be submitted. (Retain copies and verify forms are completed and signed.)

| YES | NO | Form/Title | |
|---|---|---|---|
| ✓ | | NRCA-LTI-02-A - Must be submitted for occupancy sensors and automatic time switch controls. | ☐ Field Inspector |
| ✓ | | NRCA-LTI-03-A - Must be submitted for automatic daylight controls. | ☐ Field Inspector |
| | ✓ | NRCA-LTI-04-A - Must be submitted for demand responsive lighting controls. | ☐ Field Inspector |

*A separate Lighting Schedule Must Be Filled Out for Conditioned and Unconditioned Spaces. Installed Lighting Power listed on this Lighting Schedule is only for:*

☐ CONDITIONED SPACE ☐ UNCONDITIONED SPACE

**F. Indoor Lighting Schedule and Field Inspection Energy Checklist**

☐ The actual Indoor lighting power listed on this page and on the next page includes all installed permanent and planned portable lighting systems.
☐ When Complete Building Method is used for compliance, list each different type of luminaire on separate lines.
☐ When Area Category Method or Tailored Method is used for compliance, list each different type of luminaire by each different function area on separate lines
☐ Also include track lighting in schedule, and submit the track lighting compliance form (NRCC-LTI-05-E) when line-voltage track lighting is installed.



STATE OF CALIFORNIA
# INDOOR LIGHTING
CEC-NRCC-LTI-01-E (Revised 10/15)
CALIFORNIA ENERGY COMMISSION

| | |
|---|---|
| CERTIFICATE OF COMPLIANCE | NRCC-LTI-01-E |
| Indoor Lighting | (Page 4 of 6) |
| Project Name: Ives Pool House Addition | Date Prepared: 7/27/2016 |

**G. Installed Portable Luminaires in Offices – Exception to Section 140.6(a)**

☐ This section shall be filled out ONLY for portable luminaires in offices (As defined in §100.1). All other planned portable luminaires shall be documented on next page of this compliance form.
☐ This section is used to determine if greater than 0.3 watts of portable lighting is planned for any office
☐ Fill out a separate line for each different office. Small offices that are typical (having the same general and portable lighting) may be grouped together. This allowance shall not be traded between offices having different lighting systems.

| Office Portable Luminaire Schedule | Office Installed Portable Luminaire Watts Per Square Foot | | | | | | | Office Location | Field Inspector | |
|---|---|---|---|---|---|---|---|---|---|---|
| 1 | 2 | 3 | 4 | 5 | 6 | 7 | 8 | 9 | 10 | |
| Complete Luminaire Description (i.e., LED, under cabinet, furniture mounted direct/indirect) | Watts per Luminaire | Number of Luminaires | Installed portable luminaire watts in this office (G02 x G03) | Square feet of this office | Watts per square foot (G04 / G05) | If F ≤ 0.3, enter zero; If G06 > 0.3, (G06-0.3) | G05 x G07 | Identify Office area in which these portable luminaires are installed | Pass | Fail |
| | | | | | | | | | ☐ | ☐ |
| | | | | | | | | | ☐ | ☐ |
| | | | | | | | | | ☐ | ☐ |
| | | | | | | | | | ☐ | ☐ |
| | | | | | | | | | ☐ | ☐ |
| Total installed portable luminaire watts that are greater than 0.3 watts per square foot per office | | | | | | | | Enter sum total of all pages into NRCC-LTI-01-F, Page 1 | | |



Craig D. Williams
Architecture
Interiors
Planning
Project
Management
295 Neva Street
Sebastopol, CA
95472
(707) 823-2724
CASpAccess@gmail.com

COPYRIGHT AND CONDITIONAL RIGHT OF USE
Drawings, specifications and all ideas, designs, and arrangements indicated on these drawings and specifications are and shall remain the property of Craig Williams, Architect and are intended to be used in connection with this specific project only. No part shall be copied or disclosed to others or otherwise be used in connection with any other work or project other than the specified scope of work for which they have been prepared without the prior written consent of the architect. There shall be no changes or deviations from these drawings of the accompanying specifications without the prior written consent of the Architect - the design professional in responsible charge.

THESE DRAWINGS ARE INSTRUMENTS OF SERVICE THE PROPERTY OF CRAIG D. WILLIAMS, ARCHITECT, COPYRIGHT © 2015-2016

Visual contact with these plans and specifications shall constitute conclusive evidence of acceptance of these restrictions.

CRAIG D. WILLIAMS
LICENSED ARCHITECT CRAIG DOUGLAS WILLIAMS No. C026642 REN. 10-31-17 STATE OF CALIFORNIA
08.21.2016

NOT FOR CONSTRUCTION UNLESS SIGNED BY THE ARCHITECT AND STAMPED APPROVED BY THE AUTHORITY HAVING JURISDICTION

AGENCY APPROVALS

ACCESSIBILITY
UPGRADES
IVES POOL
AND POOL HOUSE
7400 WILLOW STREET
SEBASTOPOL, CA

PROJECT NUMBER:
082515.00
DATE:
26 JULY, 2016
DRAWN BY:
CW
CHECKED BY:
CW
REVISIONS:

TITLE 24 ENERGY
MANDATORY
MEASURES

**T24-2.0**

© THESE DRAWINGS ARE INSTRUMENTS OF SERVICE AND ARE THE SOLE PROPERTY OF CRAIG WILLIAMS ARCHITECT. ANY USE WITHOUT WRITTEN CONSENT IS PROHIBITED.

Aug 23, 2016 - 12:30pm cwilliams C:\Documents and Settings\cwilliams\Desktop\CLIENTS\SEBASTOPOL CITY\VIES\CD-T24-2.0.DWG

## GENERAL NOTES

STATE OF CALIFORNIA
**INDOOR LIGHTING**
CEC-NRCC-LTI-01-E (Revised 08/15) — CALIFORNIA ENERGY COMMISSION

| | |
|---|---|
| CERTIFICATE OF COMPLIANCE | NRCC-LTI-01-E |
| Indoor Lighting | (Page 5 of 6) |
| Project Name: Ives Pool House Addition | Date Prepared: 7/27/2016 |

*A separate Lighting Schedule Must Be Filled Out for Conditioned and Unconditioned Spaces. Installed Lighting Power listed on this Lighting Schedule is only for:*
☐ CONDITIONED SPACE ☐ UNCONDITIONED SPACE

**H. INDOOR LIGHTING SCHEDULE and FIELD INSPECTION ENERGY CHECKLIST**

| Luminaire Schedule | | Installed Watts | | | | | Location | Field Inspector * | |
|---|---|---|---|---|---|---|---|---|---|
| A | B | C | D | | E | F | G | H | |
| | | | New wattage was determined | | | | | | |
| Luminaire Item Tag | Complete Luminaire Description (i.e., 3 lamp fluorescent troffer, F32T8, one dimmable electronic ballast) | Watts per Luminaire | CEC Default Watts | According to §130.0(c) | Number Luminaires | Total Installed Watts (multiply columns C x D x E) | Primary function area in which these luminaires are installed | Pass | Fail |
| ceiling | 44w LED linear luminaire | 44.0 | ☐ | ☑ | 3 | 132 | Corridor/Restroom/Support | ☐ | ☐ |
| | | | ☐ | ☐ | | | | ☐ | ☐ |
| | | | ☐ | ☐ | | | | ☐ | ☐ |
| | | | ☐ | ☐ | | | | ☐ | ☐ |
| | | | ☐ | ☐ | | | | ☐ | ☐ |
| | | | ☐ | ☐ | | | | ☐ | ☐ |
| | | | ☐ | ☐ | | | | ☐ | ☐ |
| | | | ☐ | ☐ | | | | ☐ | ☐ |
| | | | ☐ | ☐ | | | | ☐ | ☐ |
| INSTALLED WATTS PAGE TOTAL | | | | | | 132 | Enter sum total of all pages into NRCC-LTI-01-E; Page 2 | | |

CA Building Energy Efficiency Standards - 2013 Nonresidential Compliance — August 2015

STATE OF CALIFORNIA
**INDOOR LIGHTING – LIGHTING CONTROLS**
CEC-NRCC-LTI-02-E (Revised 08/15) — CALIFORNIA ENERGY COMMISSION

| | |
|---|---|
| CERTIFICATE OF COMPLIANCE | NRCC-LTI-02-E |
| Indoor Lighting - Lighting Controls | (Page 1 of 3) |
| Project Name: Ives Pool House Addition | Date Prepared: 7/27/2016 |

The NRCC-LTI-02-E shall be used to document all mandatory and prescriptive lighting controls that are applicable to the project.

**A. Mandatory Lighting Control Declaration Statements** (Indicate if the measure applies by checking yes or no below.)

| YES | NO | Control Requirements |
|---|---|---|
| ✓ | | Lighting shall be controlled by self-contained lighting control devices which are certified to the Energy Commission according to the Title 20 Appliance Efficiency Regulations in accordance with Section 110.9. |
| | ✓ | Lighting shall be controlled by a lighting control system or energy management control system in accordance with §110.9. An Installation Certificate shall be submitted in accordance with Section 130.4(b). |
| | ✓ | One or more Track Lighting Integral Current Limiters shall be installed which have been certified to the Energy Commission in accordance with §110.9 and §130.0. Additionally, an Installation Certificate shall be submitted in accordance with Section 130.4(b). |
| | ✓ | A Track Lighting Supplementary Overcurrent Protection Panel shall be installed in accordance with Section 110.9 and Section 130.0. Additionally, an Installation Certificate shall be installed in accordance with Section 130.4(b). |
| ✓ | | All lighting controls and equipment shall comply with the applicable requirements in §130.0 and shall be installed in accordance with the manufacturer's instructions in accordance with Section 130.1. |
| ✓ | | All luminaires shall be functionally controlled with manually switched ON and OFF lighting controls in accordance with Section 130.1(a). |
| ✓ | | General lighting shall be separately controlled from all other lighting systems in an area. Floor and wall display, window display, case display, ornamental, and special effects lighting shall each be separately controlled on circuits that are 20 amps or less. When track lighting is used, general, display, ornamental, and special effects lighting shall each be separately controlled, in accordance with Section 130.1(a)4. |
| ✓ | | The general lighting of any enclosed area 100 square feet or larger, with a connected lighting load that exceeds 0.5 watts per square foot shall meet the multi-level lighting control requirements in accordance with Section 130.1(b). |
| ✓ | | All installed indoor lighting shall be equipped with controls that meet the applicable Shut-OFF control requirements in Section 130.1(c). |
| ✓ | | Lighting in all Daylit Zones shall be controlled in accordance with the requirements in Section 130.1(d) and daylit zones are shown on the plans. |
| | ✓ | Lighting power in buildings larger than 10,000 square feet shall be capable of being automatically reduced in response to a Demand Responsive Signal in accordance with Section 130.1(e). |
| ✓ | | Before an occupancy permit is granted for a newly constructed building or area, or a new lighting system serving a building, area, or site is operated for normal use, indoor lighting controls serving the building, area, or site shall be certified as meeting the Acceptance Requirements for Code Compliance in accordance with Section 130.4 (a). The controls required to meet the Acceptance Requirements include automatic daylight controls, automatic shut-OFF controls, and demand responsive controls. |

CA Building Energy Efficiency Standards - 2013 Nonresidential Compliance — August 2015

STATE OF CALIFORNIA
**INDOOR LIGHTING**
CEC-NRCC-LTI-01-E (Revised 08/15) — CALIFORNIA ENERGY COMMISSION

| | |
|---|---|
| CERTIFICATE OF COMPLIANCE | NRCC-LTI-01-E |
| Indoor Lighting | (Page 6 of 6) |
| Project Name: Ives Pool House Addition | Date Prepared: 7/27/2016 |

**DOCUMENTATION AUTHOR'S DECLARATION STATEMENT**
I certify that this Certificate of Compliance documentation is accurate and complete.

| | | | |
|---|---|---|---|
| Documentation Author Name: | Sarah Pernula | Documentation Author Signature: | Sarah Pernula |
| Company: | SOLDATA Energy Consulting | Signature Date: | 7/27/2016 |
| Address: | 2235 Challenger Way, Suite 103 | CEA Certification Identification (If applicable): | |
| City/State/Zip: | Santa Rosa, CA 95407 | Phone: | 707 545 4440 |

**RESPONSIBLE PERSON'S DECLARATION STATEMENT**
I certify the following under penalty of perjury, under the laws of the State of California:
1. The information provided on this Certificate of Compliance is true and correct.
2. I am eligible under Division 3 of the Business and Professions Code to accept responsibility for the building design or system design identified on this Certificate of Compliance (responsible designer).
3. The energy features and performance specifications, materials, components, and manufactured devices for the building design or system design identified on this Certificate of Compliance conform to the requirements of Title 24, Part 1 and Part 6 of the California Code of Regulations.
4. The building design features or system design features identified on this Certificate of Compliance are consistent with the information provided on other applicable compliance documents, worksheets, calculations, plans and specifications submitted to the enforcement agency for approval with this building permit application.
5. I will ensure that a completed signed copy of this Certificate of Compliance shall be made available with the building permit(s) issued for the building, and made available to the enforcement agency for all applicable inspections. I understand that a completed signed copy of this Certificate of Compliance is required to be included with the documentation the builder provides to the building owner at occupancy.

| | | | |
|---|---|---|---|
| Responsible Designer Name: | Craig D. Williams | Responsible Designer Signature: | |
| Company: | Craig D. Williams Architecture | Date Signed: | 28 JULY 2016 |
| Address: | 295 Nova Street | License: | C26642 |
| City/State/Zip: | Sebastopol, CA 95472 | Phone: | 707.823.2724 |

CA Building Energy Efficiency Standards - 2013 Nonresidential Compliance — August 2015

STATE OF CALIFORNIA
**INDOOR LIGHTING – LIGHTING CONTROLS**
CEC-NRCC-LTI-02-E (Revised 08/15) — CALIFORNIA ENERGY COMMISSION

| | |
|---|---|
| CERTIFICATE OF COMPLIANCE | NRCC-LTI-02-E |
| Indoor Lighting - Lighting Controls | (Page 2 of 3) |
| Project Name: Ives Pool House Addition | Date Prepared: 7/27/2016 |

A separate document must be filled out for Conditioned and Unconditioned Spaces. This page is used only for the following:
☑ CONDITIONED SPACES ☐ UNCONDITIONED SPACES

**B. Mandatory and Prescriptive Indoor Lighting Control Schedule, PAF Calculation, and Field Inspection Checklist**

| Lighting Control Schedule | | | Standards Complying With [1] (✓ all that apply, or enter "E" if Exempted) | | | | | | | PAF Credit Calculations [2] | | | | | |
|---|---|---|---|---|---|---|---|---|---|---|---|---|---|---|---|
| A | B | C | D | E | F | G | H | I | J | K | L | M | N | O | |
| Location in Building | Type/ Description of Lighting Control (i.e.: occupancy sensor, automatic time switch, dimmer, automatic daylight, etc...) | # of Units | §130.1(a) | §130.1(b) | §130.1(c) | §130.1(d) | §130.1(e) | §130.1(f) | §130.1(g) | Watts of Controlled Lighting | PAF | Control Credit (K x L) | Test Required ✓ if Acceptance Test Required | Field Inspector Pass | Field Inspector Fail |
| Addition | Manual Area | 1 | ✓ | | | | | | | | | | ✓ | ☐ | ☐ |
| Addition | Multi Level | 1 | | ✓ | | | | | | | | | ✓ | ☐ | ☐ |
| Addition | Occupancy Sensor | 1 | | | ✓ | | | | | | | | ✓ | ☐ | ☐ |
| Addition | Automatic Daylighting | 1 | | | | ✓ | | | | | | | ✓ | ☐ | ☐ |
| | | | | | | | | | | | | | | ☐ | ☐ |
| | | | | | | | | | | | | | | ☐ | ☐ |
| | | | | | | | | | | | | | | ☐ | ☐ |
| Control Credit PAGE TOTAL (Sum of Column M): | | | | | | | | | | | | | | 0 | |
| IF MULTIPLE PAGES ARE USED, ENTER SUM TOTAL OF Control Credit for all pages HERE (Sum of all Column M): | | | | | | | | | | | | | | 0 | |
| | | | | | | | | | | | | | | Enter Control Credit total into NRCC-LTI-01-E, Page 1. | |

*1. §130.1(a) = Manual area controls, §130.0(b) = Multi Level; §130.1(c) = Auto Shut-Off; §130.1(d) = Mandatory Daylight, §130.1(e) = Demand Responsive; §140.6(d) = Additional lighting controls installed to earn a PAF; §140.6(a) = Prescriptive Secondary Sidelit Daylight Controls.*
*2. Check Table 140.6-A for correct Factor. PAFs shall not be traded between conditioned and unconditioned spaces. As a condition to earn a PAF, an Installation Certificate is also required to be filled out, signed, and submitted.*

CA Building Energy Efficiency Standards - 2013 Nonresidential Compliance — August 2015


Craig D. Williams
Architecture
Interiors
Planning
Project
Management

295 Nova Street
Sebastopol, CA
95472

(707) 823-2724
CASpAccess@gmail.com



COPYRIGHT AND CONDITIONAL RIGHT OF USE
Drawings, specifications and all ideas, designs, and arrangements indicated on these drawings and specifications are and shall remain the property of Craig Williams, architect and are intended to be used in connection with this specific project only. No part shall be copied or disclosed in whole or otherwise be used in connection with any other work or project other than the specified scope of work for which they have been prepared without the prior written consent of the architect. There shall be no changes or deviations from these drawings or the accompanying specifications without the prior written consent of the Architect - the design professional in responsible charge.

THESE DRAWINGS ARE INSTRUMENTS OF SERVICE THE PROPERTY OF CRAIG D. WILLIAMS, ARCHITECT, COPYRIGHT © 2015-2016

Visual contact with these plans and specifications shall constitute conclusive evidence of acceptance of these restrictions.


CRAIG D. WILLIAMS

LICENSED ARCHITECT — CRAIG DOUGLAS WILLIAMS — No. C026642 — REN. 10-31-17 — STATE OF CALIFORNIA

08302016

NOT FOR CONSTRUCTION UNLESS SIGNED BY THE ARCHITECT AND STAMPED APPROVED BY THE AUTHORITY HAVING JURISDICTION

AGENCY APPROVALS

ACCESSIBILITY UPGRADES
IVES POOL
AND POOL HOUSE
7400 WILLOW STREET
SEBASTOPOL, CA

PROJECT NUMBER:
082515.00
DATE:
30 AUGUST, 2016
DRAWN BY:
CHECKED BY:
CW
REVISIONS:

TITLE 24 ENERGY
MANDATORY
MEASURES

**T24-3.0**


© THESE DRAWINGS ARE INSTRUMENTS OF SERVICE AND ARE THE SOLE PROPERTY OF CRAIG WILLIAMS ARCHITECT. ANY USE WITHOUT WRITTEN CONSENT IS PROHIBITED.



Aug 31, 2016 - 1:18am cwilliams C:\Documents and Settings\cwilliams\Desktop\CLIENTS\SEBASTOPOL CITY\VIES\CD-T24-3.0.DWG

## GENERAL NOTES

STATE OF CALIFORNIA
**INDOOR LIGHTING – LIGHTING CONTROLS**
CEC-NRCC-LTI-02-E (Revised 09/15) — CALIFORNIA ENERGY COMMISSION

| | |
|---|---|
| CERTIFICATE OF COMPLIANCE | NRCC-LTI-02-E |
| Indoor Lighting - Lighting Controls | (Page 3 of 3) |
| Project Name: Ives Pool House Addition | Date Prepared: 7/27/2016 |

**DOCUMENTATION AUTHOR'S DECLARATION STATEMENT**

1. I certify that this Certificate of Compliance documentation is accurate and complete.

| | |
|---|---|
| Documentation Author Name: Sarah Pernula | Documentation Author Signature: Sarah Pernula |
| Company: SOLDATA Energy Consulting | Signature Date: 7/27/2016 |
| Address: 2235 Challenger Way, Suite 103 | CEA Certification Identification (If applicable): |
| City/State/Zip: Santa Rosa, CA 95407 | Phone: 707.545.4440 |

**RESPONSIBLE PERSON'S DECLARATION STATEMENT**

I certify the following under penalty of perjury, under the laws of the State of California:

1. The information provided on this Certificate of Compliance is true and correct.
2. I am eligible under Division 3 of the Business and Professions Code to accept responsibility for the building design or system design identified on this Certificate of Compliance (responsible designer)
3. The energy features and performance specifications, materials, components, and manufactured devices for the building design or system design identified on this Certificate of Compliance conform to the requirements of Title 24, Part 1 and Part 6 of the California Code of Regulations.
4. The building design features or system design features identified on this Certificate of Compliance are consistent with the information provided on other applicable compliance documents, worksheets, calculations, plans and specifications submitted to the enforcement agency for approval with this building permit application.
5. I will ensure that a completed signed copy of this Certificate of Compliance shall be made available with the building permit(s) issued for the building, and made available to the enforcement agency for all applicable inspections. I understand that a completed signed copy of this Certificate of Compliance is required to be included with the documentation the builder provides to the building owner at occupancy.

| | |
|---|---|
| Responsible Designer Name: Craig D Williams | Responsible Designer Signature: |
| Company: Craig D Williams Architecture | Date Signed: 28 JULY 2016 |
| Address: 295 Neva Street | License: C26642 |
| City/State/Zip: Sebastopol, CA 95472 | Phone: 707.823.2724 |



Craig D. Williams
Architecture
Interiors
Planning
Project
Management

295 Neva Street
Sebastopol, CA
95472

(707) 823-2724
CASpAccess@gmail.com

COPYRIGHT AND CONDITIONAL RIGHT OF USE
Drawings, specifications and all ideas, designs, and arrangements indicated on these drawings and specifications are and shall remain the property of Craig Williams, architect and are intended to be used in connection with this specific project only. No part shall be copied or disclosed to others or otherwise be used in connection with any other work or project other than the specified scope of work for which they have been prepared without the prior written consent of the architect. There shall be no changes or deviations from these drawings or the accompanying specifications without the prior written consent of the Architect - the design professional in responsible charge.

THESE DRAWINGS ARE INSTRUMENTS OF SERVICE THE PROPERTY OF CRAIG D. WILLIAMS, ARCHITECT, COPYRIGHT © 2015-2016

Visual contact with these plans and specifications shall constitute conclusive evidence of acceptance of these restrictions.

CRAIG D. WILLIAMS
LICENSED ARCHITECT — CRAIG DOUGLAS WILLIAMS — No. C026642 — REN. 10-31-17 — STATE OF CALIFORNIA
08212016

NOT FOR CONSTRUCTION UNLESS SIGNED BY THE ARCHITECT AND STAMPED APPROVED BY THE AUTHORITY HAVING JURISDICTION

AGENCY APPROVALS

ACCESSIBILITY
UPGRADES
IVES POOL
AND POOL HOUSE
7400 WILLOW STREET
SEBASTOPOL, CA

PROJECT NUMBER:
062515.00
DATE:
28 JULY, 2016
DRAWN BY:
CW
CHECKED BY:
CW
REVISIONS:

TITLE 24 ENERGY
MANDATORY
MEASURES

**T24-4.0**

© THESE DRAWINGS ARE INSTRUMENTS OF SERVICE AND ARE THE SOLE PROPERTY OF CRAIG WILLIAMS ARCHITECT. ANY USE WITHOUT WRITTEN CONSENT IS PROHIBITED.

Aug 23, 2016 - 12:28pm cwilliams C:\Documents and Settings\cwilliams\Desktop\CLIENTS\SEBASTOPOL CITY\IVES\CD-T24-4.0.DWG